Operator's Manual

1930+/2632+

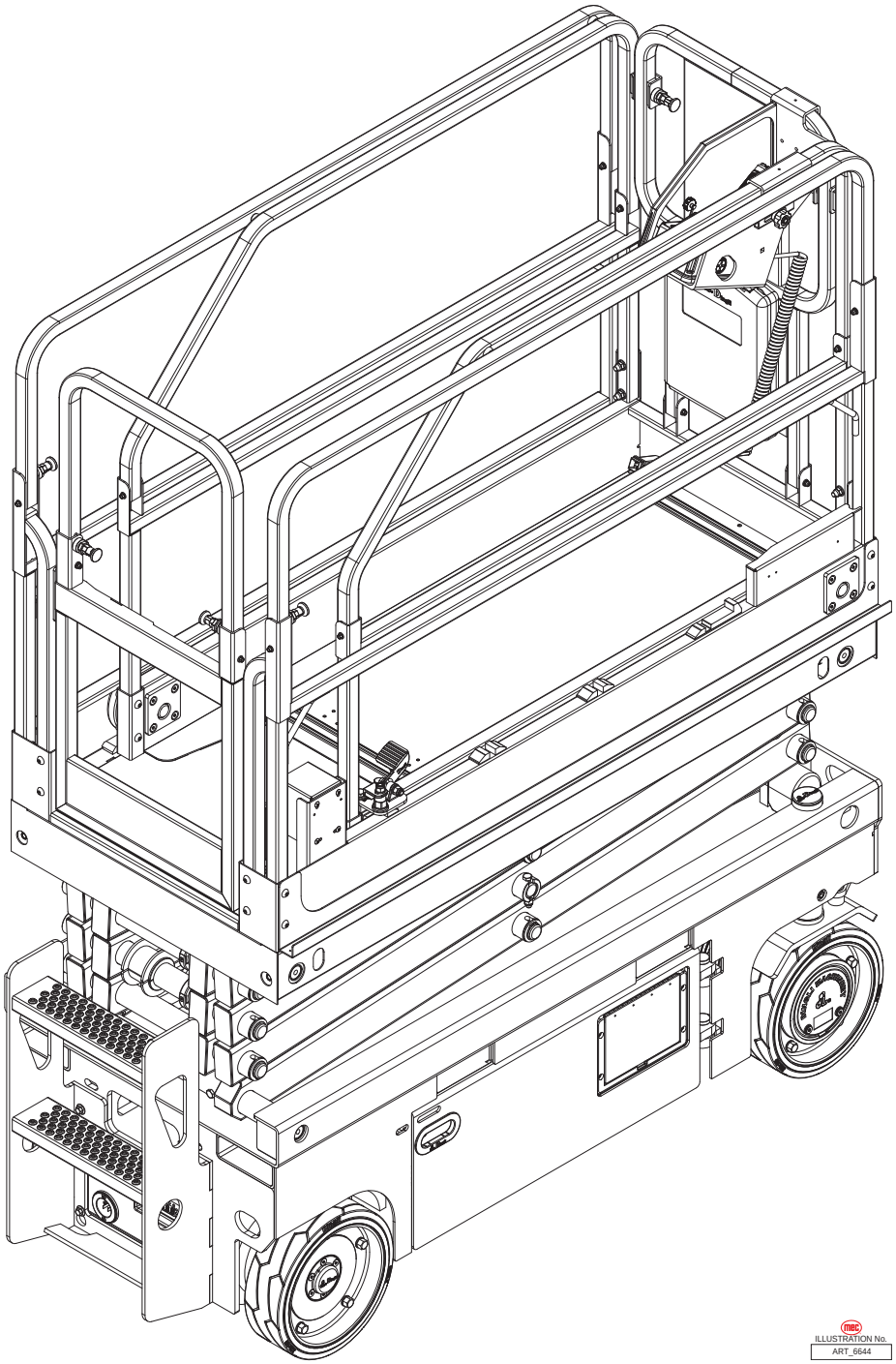

Meets requirements of ANSI A92.20-2020 and CSA B354.6-2017.

1930+ Serial Number 21400100 - Up

2632+ Serial Number 21500100 - Up

Part # 97488
April 2026

Revision History

Date	Reason for Update
April 2026	New Release

MEC Aerial Work Platforms

1401 S. Madera Avenue, Kerman, CA 93630 USA
Toll Free: 1.877.MEC.LIFT or 1.877.632.5438
Phone: 1.559.710.2425
Fax: 1.559.710.2390
info@MECawp.com
www.MECawp.com

Table of Contents

Section 1 - Introduction 1
Introduction 1

Section 2 - Safety 2
Safety 2
Safety Alert Symbols & Fall Protection 3

Section 3 - Specifications 4
Specifications, 1930+ to 2632+ 4

Section 4 - Hazards 5
Electrocution Hazard 5
Tip-over Hazards 8
Fall & Collision Hazards 10
Additional Safety Hazards 12

Section 5 - Components & Controls 13
Component Locations 13
Upper Controls. 14
Lower Controls. 15

Section 6 - Workplace Inspection 16
Workplace Inspection 16

Section 7 - Operating Instructions & Functions Tests 17
Functions Tests 17
Operating Instructions 23
Maintenance Lock 27
Sheet Materials Rack 30

Section 8 - Battery Charging 31
Battery Charging 31

Section 9 - Maintenance. 32
Maintenance 32
Lubrication 34
Pre-Start Inspection Checklist 35
Frequent Inspection Checklist 36
Maintenance Inspection Report 37

Section 10 - Decals 38
Decals, 1930+ 38
Decals, 2632+ 40
Serial Plate 42

Section 11 - Troubleshooting 43
Troubleshooting 43

Section 12 - Transport and Lifting Instructions 44
Transport and Lifting Instructions 44

Introduction

This Operator's Manual has been designed to provide you, the owner, user or operator, with the instructions and operating procedures essential to properly and safely operate your MEC Aerial Work Platform for positioning personnel, along with their necessary tools and materials, to overhead work locations.

This Operator's Manual and other manuals provided by MEC on the machine must be read and understood prior to operating your MEC Aerial Work Platform. The operator should not accept operating responsibility until he/she has read and understands the operator's manual as well as having operated the MEC Aerial Work Platform under supervision of an authorized, trained and qualified operator.

DANGER

It is essential that the operator of the aerial work platform is not alone at the workplace during operation.

Modifications of this machine from the original design and specifications without written permission from MEC are strictly forbidden. A modification may compromise the safety of the machine, subjecting the platform occupants and personal around the machine to serious injury or death.

Your MEC Aerial Work Platform has been designed, built, and tested to provide safe, dependable service. Only authorized, trained and qualified personnel shall be allowed to operate or service the machine.

MEC, as manufacturer, has no direct control over machine application and operation. Proper safety practices are the responsibility of the owner, user and operator.

If there is a question on application and/or operation contact:

MEC Aerial Work Platforms

1401 S. Madera Avenue, Kerman, CA 93630 USA
Toll Free: 1.877.MEC.LIFT or 1.877.632.5438
Phone: 1.559.710.2425
Fax: 1.559.710.2390
info@MECawp.com
www.MECawp.com

Safety

DO NOT operate this machine until you have read and understood this manual, have performed the Workplace Inspection, Pre-Start Inspection and Routine Maintenance, and have completed all the test operations detailed in the Operating Instructions section.

Failure to read, understand and follow all safety rules, warnings, and instructions could result in serious injury or death. For your safety and the safety of those around you, you must operate your machine as instructed in this manual.

MEC designs aerial work platforms to safely and reliably position personnel, along with their necessary tools and materials, at overhead work locations. The owner/user/operator of the machine should not accept responsibility for the operation of the machine unless properly trained.

ANSI and other applicable standards identify requirements of all parties who may be involved with self-propelled elevating work platforms. The Manual of Responsibilities is considered a part of this machine and can be found in the manual compartment, located at the platform control station. To ensure safe use of machine, inspections and training specified in ANSI/SIA A92.22 & A92.24 must be performed at designated intervals as prescribed.

WARNING

This product can expose you to chemicals known to the State of California to cause cancer and birth defects or other reproductive harm. For more information go to www.p65warnings.ca.gov.

Safety Alert Symbols & Fall Protection

MEC manuals and decals use symbols, colors and signal words to help you recognize important safety, operation and maintenance information.

DANGER	**RED and the word DANGER – Indicates an imminently hazardous situation which, if not avoided, will result in death or serious injury.**
WARNING	**ORANGE and the word WARNING – Indicates a potentially hazardous situation which, if not avoided, could result in death or serious injury.**
CAUTION	**YELLOW with alert symbol and the word CAUTION – Indicates a potentially hazardous situation which, if not avoided, may result in minor or moderate injury.**
CAUTION	**YELLOW without alert symbol and the word CAUTION – Indicates a potentially hazardous situation which, if not avoided, may result in property damage.**
NOTICE	**GREEN and the word NOTICE – Indicates operation or maintenance information.**

Fall Protection

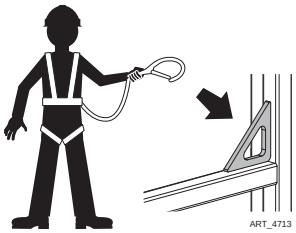

Operators must comply with employer, job site and governmental rules regarding the use of personal protective equipment.

Use personal fall protection equipment (PFPE) when operating this machine.

All personal fall protection equipment (PFPE) must comply with applicable governmental regulations, and must be inspected and used in accordance with the personal fall protection equipment (PFPE) manufacturer's instructions.

Fall restraint or fall arrest must be properly attached to a designated anchorage point when driving or operating the machine. Attach only one fall restraint or fall arrest to each anchorage point.

Specifications, 1930+ to 2632+

		1930+		2632+	
Height, Working Maximum	Indoor	25.6 ft	7.8 m	32.8 ft	10 m
	Outdoor	25.6 ft	7.8 m	26.6 ft	8.1 m
Height, Platform Maximum	Indoor	19 ft	5.8 m	26.2 ft	8 m
	Outdoor	19 ft	5.8 m	20.0 ft	6.1 m
Height, Stowed Maximum	Rails Up	84.6 in	2.15 m	92.9 in	2.36 m
	Rails Folded	72.0 in	1.83 m	74.8 in	1.9 m
Width		29.9 in	0.76 m	32.7 in	0.83 m
Length, Platform	Retracted	73.2 in	1.86 m	97.6 in	2.48 m
	Extended	108.7 in	2.76 m	133.1 in	3.38 m
Platform Dimensions (Length × Width)		65.7×29.1 in	1.67×0.74 m	89.4×31.9 in	2.27×0.81 m
Platform Extension Length		35.4 in	0.9 m	35.4 in	0.9 m
Maximum Platform Capacity		600 lbs	272 kg	600 lbs	272 kg
Extension Deck Capacity		300 lbs	136 kg	300 lbs	136 kg
Maximum Occupants	Indoor	2 Person		2 Person	
	Outdoor	1 Person		1 Person	
Maximum Wind Speed		28 mph	12.5 m/s	28 mph	12.5 m/s
Wheelbase		53.5 in	1.36 m	73.6 in	1.87 m
Turning Radius	Outside	64.6 in	1.64 m	82.7 in	2.1 m
	Inside	7.8 in	0.2 m	7.8 in	0.2 m
Pothole Ground Clearance	Retracted	3.5 in	9 cm	3.9 in	10 cm
	Deployed	0.6 in	1.6 cm	0.7 in	1.9 cm
Weight**		3,835 lbs	1,740 kg	5,140 lbs	2,330 kg
Maximum Hydraulic Pressure (Functions)		2,610 psi	180 bar	3,190 psi	220 bar
System Voltage		24 Volt DC		24 Volt DC	
Batteries		Four 6-Volt, 185Ah		Four 6-Volt, 185Ah	
Tire Size		12.7×4 in	Φ323×100 mm	15×5 in	Φ381×127 mm
Maximum Slope Rating					
Slope, Stowed Position		27% (15°)		27% (15°)	
Side Slope, Stowed Position		14% (8°)		14% (8°)	
Working Slope		1.5° Side, 3.0° Inline		1.5° Side, 3.0° Inline	
Drive Speeds					
Stowed, Maximum		3.4 mph	5.5 km/h	3.7 mph	6.0 km/h
Platform Raised, Maximum		0.37 mph	0.6 km/h	0.5 mph	0.8 km/h
Floor Loading Information					
Tire Load, Maximum		1,330 lbs	603 kg	1,722 lbs	781 kg
Tire Contact Pressure		148 psi	10.4kg/cm^2 (1,019kPa)	152 psi	10.7 kg/cm^2 (1043.7 kPa)
Occupied Floor Pressure		283 psf	1,373kg/m^2 (13.5kPa)	264 psf	1,285.7 kg/m^2 (12.6 kPa)

Meets requirements of ANSI A92.20-2020 and CSA B354.6:17.
*Working Height adds 6 feet (2 meters) to platform height.
**Weight may increase with certain options.

Electrocution Hazard

ELECTROCUTION HAZARD! THIS MACHINE IS NOT INSULATED!

DEATH OR SERIOUS INJURY will result from contact with or inadequate clearance from any electrically charged conductor.

DANGER

You must maintain a CLEARANCE OF AT LEAST 10 FEET (3.05 METERS) between any part of the machine, or its load, and any electrical line or apparatus carrying over 300 Volts up to 50,000 Volts. One foot (30.5 CENTIMETERS) additional clearance is required for every additional 30,000 Volts.

Observe Minimum Safe Approach Distance.

This machine is **not** electrically insulated and **will not** provide protection from contact with or proximity to electrical current!

Maintain safe distances from electrical power lines and apparatus in accordance with applicable government regulations and the following chart:

Voltage	Minimum Safe Approach Distance	
Phase to Phase	**Feet**	**Meters**
0 to 300 Volts	Avoid Contact	
Over 300V to 50kv	10ft	3.1m
Over 50KV to 200KV	15ft	4.6m
Over 200KV to 350KV	20ft	6.1m
Over 350KV to 500KV	25ft	7.6m
Over 500KV to 750KV	35ft	10.7m
Over 750KV to 1000KV	45ft	13.7m

Allow for platform movement, electrical line sway or sag and beware of strong or gusty winds.

Keep away from the machine if it contacts energized power lines. Personnel on the ground or in the platform must not touch or operate the machine until energized power lines are shut off.

Do not use the machine as a ground for welding.

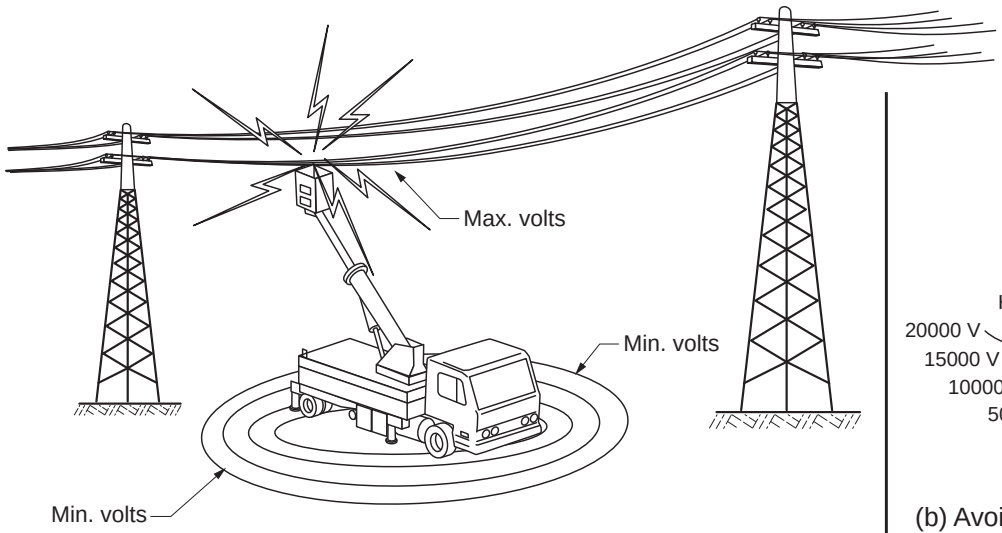

(a) Affected area

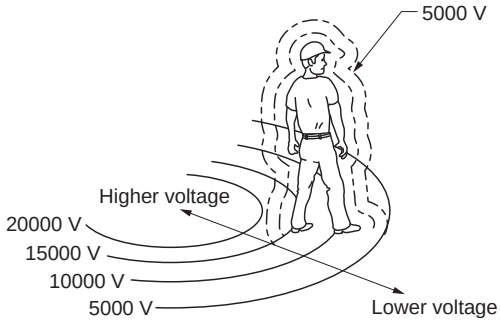

(b) Avoid simultaneous contact across areas of high potential difference

CLEARANCES FROM LIVE AERIAL CONDUCTORS

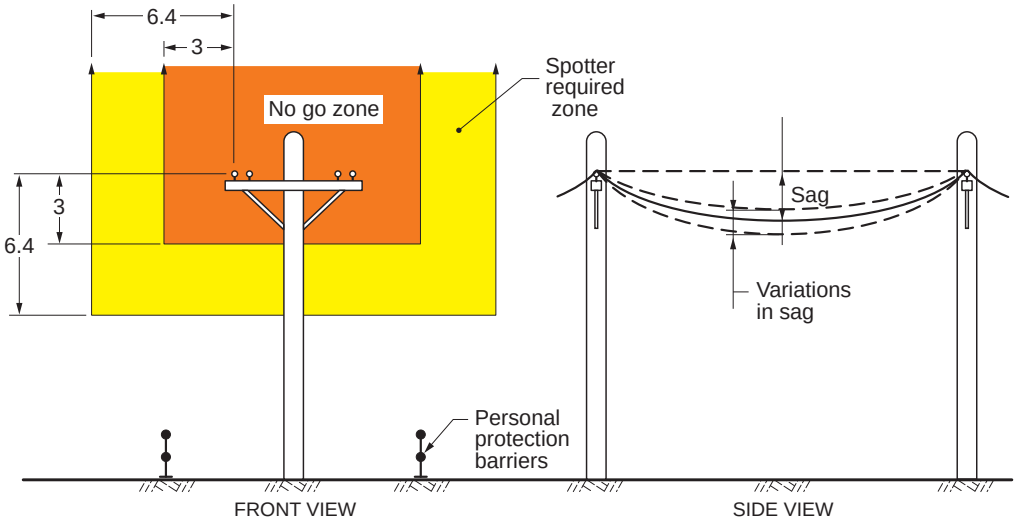

(a) Distribution lines up to and including 133 kV

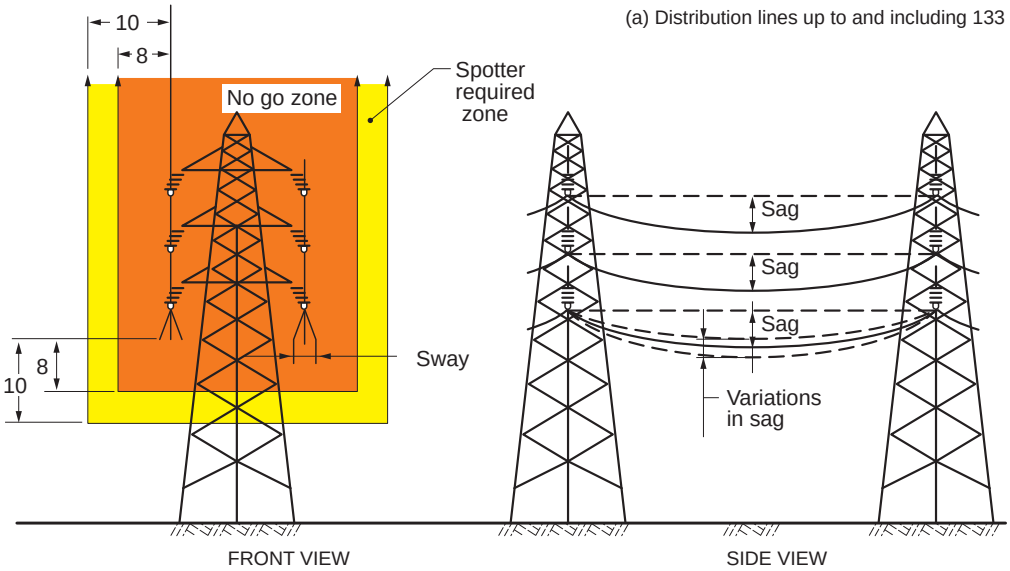

(b) Transmission lines greater than 133 kV

LEGEND

- [ ] = No shading, in the front views, indicates no proximity requirements
- [ ] = Light shading indicates spotter is required
- [ ] = Heavy shading indicates the NO GO ZONE

Continued on the next page.

ART_3265

When working in the area of energized conductors the user shall direct and the operator shall comply with the requirements to:

1) Stay at least 10 feet (3.05 meters) away from power lines with any part of their body, conductive object or any part of the MEWP (Mobile Elevating Work Platform).
2) If work requires working nearer than 10 feet (3.05 meters), stop and consult a qualified person with respect to electrical transmission and distribution to have appropriate measures taken (such as de-energizing and grounding).
3) If there is a question that the power lines may carry more than 50kV, consult a qualified person with respect to electrical transmission and distribution before proceeding.
4) If working or approaching closer than explained above, it shall only be done by a qualified person with respect to electrical transmission and distribution. Only qualified persons may work on electric circuit parts or equipment that has not been de-energized. Such persons shall be capable of working safely on energized circuits and shall be familiar with the proper use of special precautionary techniques, personal protective equipment, insulating and shielding materials and insulated tools.

Tip-over Hazards

DO NOT exceed the maximum platform capacity. The weight of options and accessories will reduce the rated platform capacity and must be factored into the total platform load. Refer to the decals on the options.

DO NOT elevate the platform when the machine is on a surface that is soft and/or on a slope.

DO NOT elevate the platform unless the machine is on a firm, level surface.

DO NOT depend on the tilt alarm as a level indicator. STOP if the tilt alarm sounds and the red light illuminates when the platform is raised. Use extreme caution to lower the platform. Move the machine to a firm, level surface.

Driving: DO NOT drive the machine on a slope that exceeds the maximum uphill, downhill or side slope rating. Slope rating applies to machines in the stowed position.

Driving in stowed position: Use extreme care and reduce speed when driving across uneven terrain, debris, unstable or slippery surfaces, and near holes or drop-offs.

Driving with the platform elevated: DO NOT drive on or near uneven terrain, unstable surfaces, curbs, drop-offs or other hazardous conditions. DO NOT drive over the maximum speed with the platform raised. Refer to specifications.

DO NOT push off or pull toward any object outside the platform. DO NOT push the machine or other objects with the platform. DO NOT contact adjacent structures with the platform.

DO NOT tie the platform to adjacent structures.

Max Allowable Side Force, Outdoor (1 Person)	Max Allowable Side Force, Indoor (2 Person)
45lbs (200N)	90lbs (400N)

DO NOT use the platform controls to free a platform that is caught, snagged or otherwise prevented from normal motion by an adjacent structure.

DO NOT elevate the platform when wind speeds are in excess of 28mph (12.5m/s). If wind speeds exceed 28mph (12.5m/s) when the platform is elevated, carefully lower the platform and discontinue operation.

DO NOT increase the surface area of the platform (i.e. cover the rails with tarp or plywood). Increased surface area exposed to the wind will decrease machine stability.

DO NOT attach overhanging loads or use the machine as a crane. DO NOT place loads outside the platform perimeter.

NEVER transport tools and materials unless they are firmly secured. Secure all tools and loose materials.

NEVER alter or disable any machine components.

NEVER replace any part of the machine with items of different weight or specification.

NEVER modify or alter the work platform without written permission from MEC.

NEVER place ladders or scaffolds in the platform or against any part of the machine.

NEVER use the machine on a moving or mobile surface or vehicle.

Ensure that all tires are in good condition and lug nuts are properly torqued.

DO NOT operate the machine with the chassis trays open.

DO NOT alter or disable the limit switches or machine components that in any way affect safety and stability.

DO NOT replace items critical to machine stability with items of different weight or specification. DO NOT modify or alter this machine without prior written permission from the manufacturer.

DO NOT use batteries that weigh less than the original equipment. Batteries are used as counterweight and are critical to the machine stability. Each battery must weigh at least as much as the OEM battery.

Fall & Collision Hazards

Fall Hazards

DO NOT sit, stand or climb on the platform guard rails. Maintain a firm footing on the platform floor at all times.

Art_2826

DO NOT exit the platform when elevated. DO NOT climb down from the platform when elevated.

Keep the platform floor clear of debris.

DO NOT fasten a fall restraint lanyard to an adjacent structure.

Art_2825

Ensure that the platform entry is properly closed and secured before operating the machine.

Ensure that the guard rails are properly installed and in good condition before operating the machine.

Operators must comply with employer and job site rules and governmental regulations regarding the use of personal protective equipment.

Collision Hazards

Check path before moving for equipment, materials or other obstructions.

Art_2835

Check path before moving for overhead obstructions.

Check path before moving for crushing hazards when holding the platform rail.

Be aware of limited sight distance and blind spots when driving or operating.

Be aware of extended platform position(s) when moving the machine.

Art_2829

Observe and use color-coded direction arrows on the platform controls and platform decal plate for drive and steer functions.

Reduce travel speed when moving the machine on slopes, when near personnel and obstacles, or when surface conditions are wet, slippery or otherwise limiting.

DO NOT operate in the path of any crane unless the controls of the crane have been locked out and/or precautions have been taken to prevent any possible collision.

Art_2827

Stunt driving and horseplay are PROHIBITED.

Watch for personnel and obstructions below the platform when lowering the platform.

Keep hands and limbs out of scissors.

Use common sense and planning when operating the machine with the controller from the ground. Maintain safe distances between the operator, the machine and fixed objects.

Additional Safety Hazards

Explosion and Fire Hazards

- DO NOT operate the machine in hazardous locations or locations where potentially flammable or explosive gases or particles may be present.

Damaged Machine Hazards

- Conduct a thorough pre-start inspection of the machine and test all functions before each work shift to check for damage, malfunction and unauthorized modification. Tag and remove a damaged, malfunctioning or modified machine from service. DO NOT use a damaged, malfunctioning or modified machine.
- Routine maintenance must be performed by the operator before each work shift. Scheduled maintenance must be performed by a qualified service technician at scheduled intervals. Tag and remove from service any machine that has not had scheduled preventative maintenance performed.
- Check that all safety and instructional decals are in place and undamaged.
- Check that the operator's, safety and responsibilities manuals are present in the storage container located in the platform. All manuals must be complete, undamaged and readable.

Bodily Injury Hazards

- DO NOT operate the machine when there is a hydraulic fluid or air leak. Hydraulic fluid or air under pressure can penetrate and/or burn skin.
- All compartments must remain closed and secure during machine operation. Improper contact with components under any cover will cause serious injury. Only trained maintenance personnel should access compartments. The operator should only access a compartment when performing pre-operation inspection.

Battery Safety - Burn Hazards

- Batteries contain acid. Always wear protective clothing and eye wear when working with batteries.
- Avoid spilling or contacting battery acid. Neutralize battery acid spills with baking soda and water.

Battery Safety - Explosion Hazard

- Keep sparks, flame and lighted tobacco away from batteries. Batteries emit explosive gas. The battery tray should remain open during the entire charging cycle.

Battery Safety - Electrocution Hazard

- Avoid contact with electrical terminals.

Component Locations

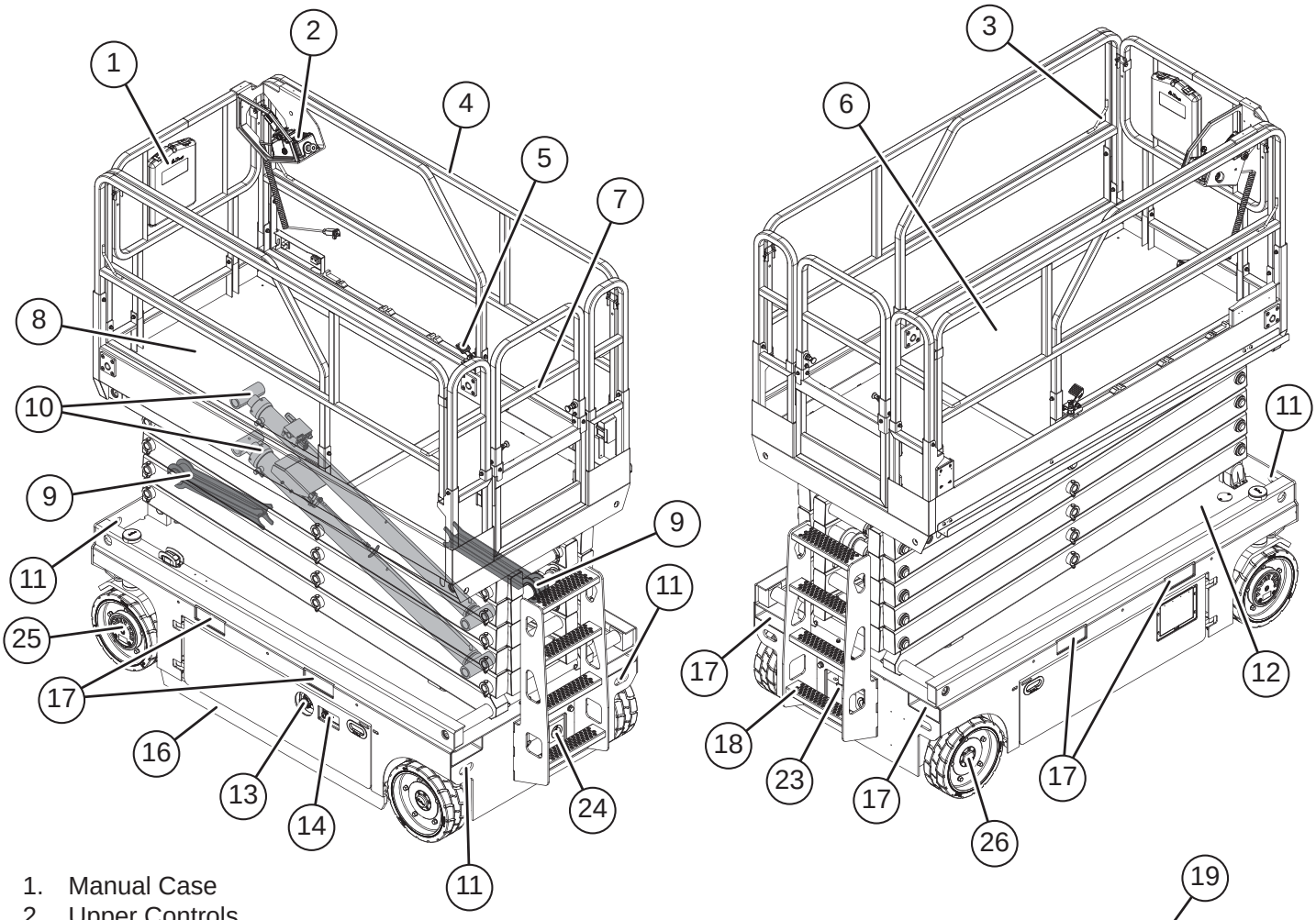

1. Manual Case
2. Upper Controls
3. Lanyard Anchorage (4x)
4. Guard Rails
5. Extension Deck Release
6. Main Platform
7. Entry Gate
8. Extension Deck
9. Maintenance Lock(s) *(Depending on model, will have either 1 or 2.)*
10. Lift Cylinder(s) *(Depending on model, will have either 1 or 2.)*
11. Tie-Down/Lift Points
12. Chassis
13. Main Power Switch, Lockable
14. Battery Charger
15. Batteries
16. Pothole Guard
17. Forklift Pocket
18. Entry Ladder
19. Motor Controller
20. Hydraulic Pump & Motor *(Hydraulic Pump located inside Hydraulic Tank.)*
21. Hydraulic Tank
22. Lower Controls
23. Emergency Lowering Handle *(Located under entry ladder.)*
24. Battery Charger & Power to Platform Outlet *(Located under entry ladder.)*
25. Drive/Steer Wheels, Front
26. Wheels, Rear

Control Module

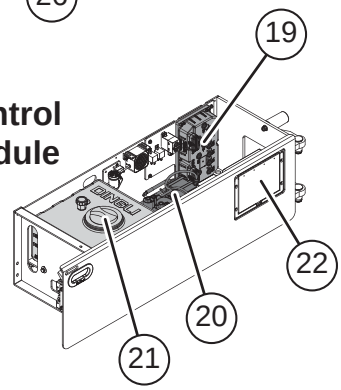

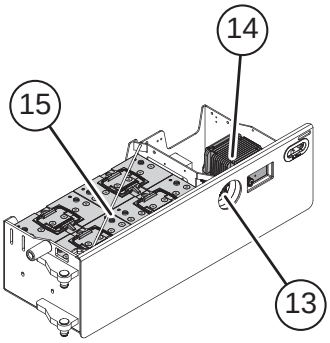

Battery Module

ILLUSTRATION No.
ART_6643

Upper Controls

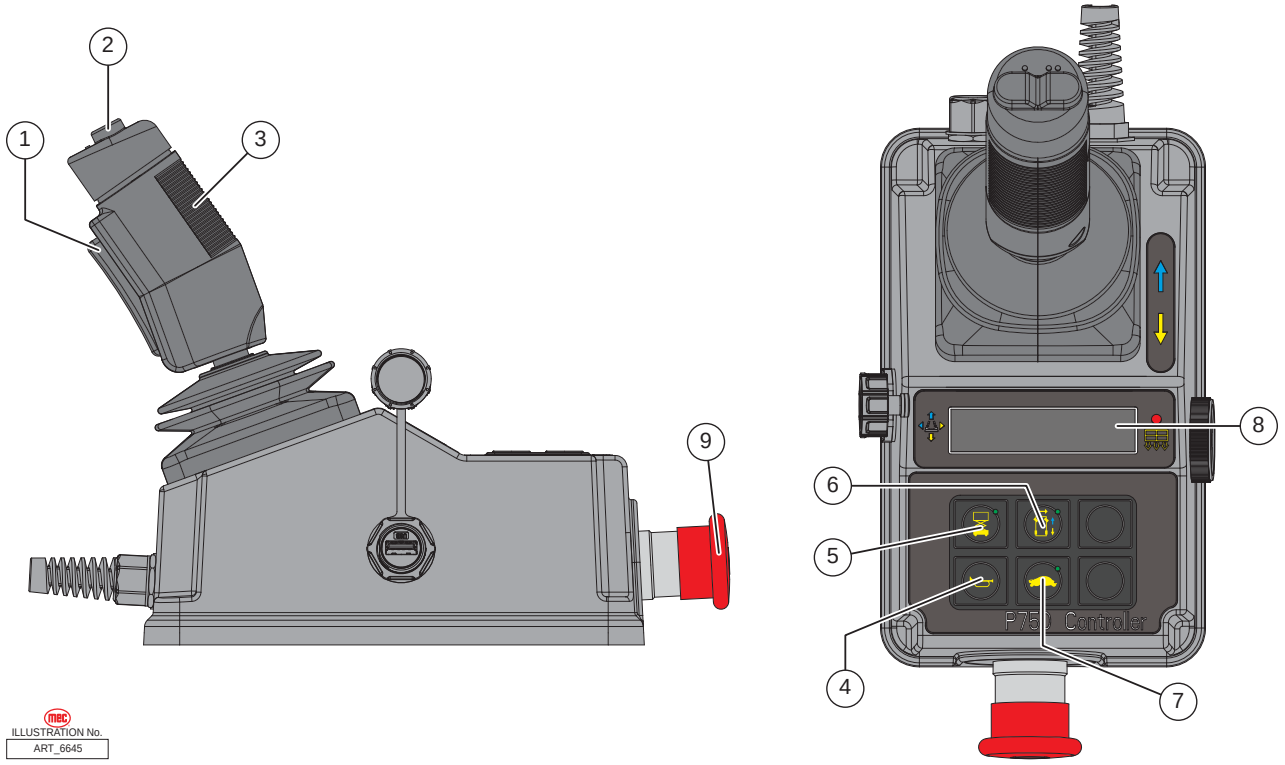

WARNING **ALWAYS be aware of the machine's position and of your surroundings before activating any control function.**

Control		Description	
1	Function Enable Switch	Squeeze to enable Drive, Steer, and Lift functions from the Control Handle.	
2	Steer Switch	Using your thumb, press and hold the rocker switch to steer Left or Right.	
3	Control Handle	Drive	Proportionally controls Forward and Reverse travel in the direction indicated by the blue and yellow colors of the Drive Select button.
		Lift	Proportionally controls Lift and Lower functions in the direction of the control handle movement.
4	Horn button	Press to sound warning horn.	
5	Lift Select	Press this button to enable the Lift function and the small green button in the upper right corner will glow to indicate this function has been selected and the display will read Lift Mode. • Regardless of if the Function Enable Switch is pressed or released, if no machine movement is made in 10 seconds then the current selection of Lift will time-out and the LED display will dim. • Release then press the Function Enable Switch to reactivate selected function.	
6	Drive Select	Press this button to enable the Drive function and the small green button in the upper right corner will glow to indicate this function has been selected and the display will read Drive Mode. • Regardless of if the Function Enable Switch is pressed or released, if no machine movement is made in 10 seconds then the current selection of Drive will time-out and the LED display will dim. • Release then press the Function Enable Switch to reactivate selected function.	
7	Drive Speed Select	With the Drive function selected, press this button to activate the slow or fast drive function. The green light on indicates Low Speed Drive is selected and the light off indicates High Speed Drive is selected. • Regardless of if the Function Enable Switch is pressed or released, if no machine movement is made in 10 seconds then the current selection of Drive will time-out and the LED display will dim. • Release then press the Function Enable Switch to reactivate selected function.	
8	LED Display	Indicates the state of battery charge and displays machine information.	
9	Emergency Stop Switch	Pull out the red Emergency Stop switch to operate the machine. Push in the red Emergency Stop switch at any time to stop all machine functions	

Lower Controls

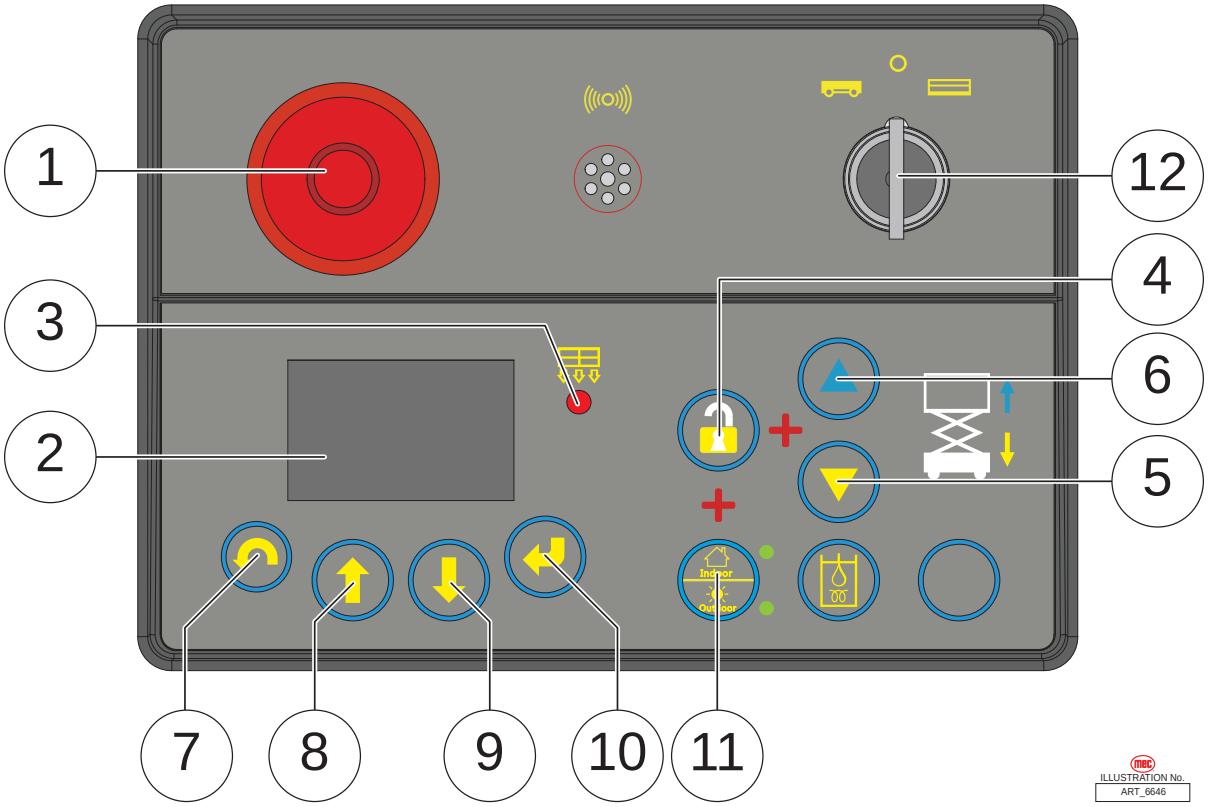

WARNING **ALWAYS be aware of the machine's position and of your surroundings before activating any control function.**

Control		Description	
1	Emergency Stop Switch	Pull out the red Emergency Stop switch to operate the machine. Push in the red Emergency Stop switch at any time to stop all machine functions	
2	LED Display	Indicates the state of battery charge and displays machine information.	
3	Overload Indicator Light	Indicates too much weight on the platform. Remove excess weight from the platform to restore machine function and continue operations.	
4	Function Enable Button	Press and hold this button along with pressing either the Platform Down Button or the Platform Up Button to activate selected function.	
5	Platform Down Button	Press and hold both the Function Enable Button and this button then the platform with lower.	
6	Platform Up Button	Press and hold both the Function Enable Button and this button then the platform with rise.	
7	Menu Escape Button	Press this button to exit the Menu screen.	
8	Menu Up Button	Press this button to go up the Menu items.	
9	Menu Down Button	Press this button to go down the Menu items.	
10	Menu Enter Button	Press this button to enter the Menu screen.	
11	Indoor/Outdoor Button	Press and hold both the Function Enable Button and this button to switch between Indoor and Outdoor mode. • When Indoor mode is selected, the upper green light will glow and the upper control box will indicate Indoor mode has been selected. • When Outdoor mode is selected, the lower green light will glow and the upper control box will indicate Outdoor mode has been selected.	
12	Key Switch	Platform	Turn the key switch to the platform position and the platform controls will be selected.
		Off	Turn the key switch to the Off position and the machine will be turned off.
		Base	Turn the key switch to the base position and the ground controls will be selected.

Workplace Inspection

DO NOT operate this machine until you have read and understood this manual, have performed the Workplace Inspection, Pre-Start Inspection and Routine Maintenance, and have completed all the test operations detailed in the Operating Instructions section.

Inspect the workplace and determine whether the workplace is suitable for safe machine operation. Do this before moving the machine to the workplace.

Be sure the lift is the correct machine for the job.

Be aware of workplace conditions, and continue to watch for hazards while operating the machine.

Workplace Inspection

Before operating the machine, check the workplace for all possible hazards, including but not limited to:

- Drop-offs or holes, including those concealed by water, ice, mud, etc.
- Sloped, unstable or slippery surfaces
- Bumps, surface obstructions and debris
- Overhead obstructions and electrical conductors
- Other objects or equipment
- Hazardous locations and atmospheres
- Inadequate surface and support to withstand all load forces imposed by the machine
- Wind and weather conditions
- The presence of unauthorized personnel
- Other possible unsafe conditions

Functions Tests

DO NOT operate this machine until you have read and understood this manual, have performed the Workplace Inspection, Pre-Start Inspection and Routine Maintenance, and have completed all the test operations detailed in the Operating Instructions section.

This section provides instructions and tests for each function of machine operation. Follow all safety rules and instructions. The operator must conduct inspections and a Functions Test of the machine before each work shift to check that all machine systems are working properly.

Test the machine on a firm level surface with no debris, drop-offs, potholes, overhead obstructions or electrical conductors. Perform each step outlined in this section.

This machine shall only be operated by trained and authorized personnel. If multiple operators use this machine, all must be trained, qualified and authorized to use it. New operators must perform a Pre-Start Inspection and Functions Test prior to operating the machine.

Operators must comply with all employer and job site rules and governmental regulations regarding the use of personal protective equipment.

DO NOT use a machine that is malfunctioning. If any function does not perform as described, tag the machine and remove for repair by a qualified service technician. After repairs are completed, a Pre-Start Inspection and Functions Test must be performed before using the machine.

WARNING **Check the area above and around the machine for obstructions and electrical power lines before operating the machine. The machine must have space to allow full elevation of platform.**

Prestart

Perform Prestart Inspection (see page 35). Check Emergency Stop buttons at both the lower control and platform controls, pull them both out to reset.

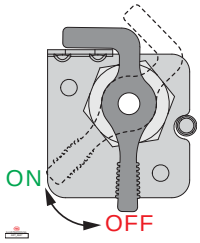

Located next to the battery charger display, check the Main Power Switch. The Main Power Switch can be turned and must be in the On position to allow machine operation. The Main Power Switch can also be locked with a padlock to prevent unauthorized use.

Functions Test

1. Select a test area that is firm, level and free of obstruction.
2. Turn the main power switch to the On position.

At the Ground Controls

1. Pull the red Emergency Stop button out to the On position (pulled out) at both the ground and

platform controls.

2. Turn the Key Switch to ground control.
3. Observe the diagnostic LCD readout on the ECU window located at the Platform Controls.
   - **Result:** The LCD should look similar to the picture right.

Test Lower Control Emergency Stop

1. Push in the ground red Emergency Stop button to the Off position (pushed in).
   - **Result:** No functions should operate.
2. Pull out the ground red Emergency Stop button to the On position (pulled out).

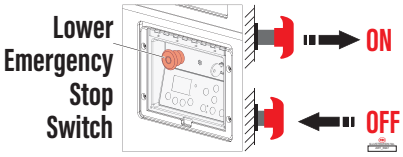

Test the Platform Lift/Lower Functions

WARNING **Check the area above and around the machine for obstructions and electrical power lines before operating the machine.**

A buzzer with different sound frequency is controlled by the control system. The descent alarm sounds at 60 beeps per minute. The alarm that goes off when the machine is not level or is the pothole guards have not deployed sounds at 180 beeps per minute.

1. At the lower controls, turn the Key Switch to either the Off position or the Platform position.
2. At the lower controls, press and hold the Platform Up or Platform Down button.
   - **Result:** No function should operate.
3. Turn the Key Switch to ground control position
4. At the lower controls, press and hold the Function Enable Button and the Platform Up button.
   - **Result:** The platform should raise.
5. Press and hold the Function Enable Button and hold the Platform Down button.
   - **Result:** The platform should lower to end. The descent alarm should sound while the platform is lowering.

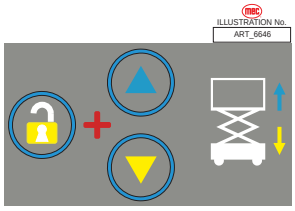

Test the Emergency Lowering

1. Activate the up function and raise the platform approximately 2 feet (60 centimeters).
2. Pull the Emergency Lowering Handle.
   - **Result:** The platform should lower. The descent alarm will not sound.

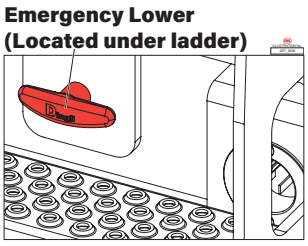

At the Platform Controls

1. Turn the Key Switch to platform control.

Test Upper Control Emergency Stop

1. Push in the platform red Emergency Stop button to the Off position (pushed in).
   - **Result:** No functions should operate.
2. Pull out the red Emergency Stop button to the On position (pulled out).
   - **Result:** The LCD display light should come on.

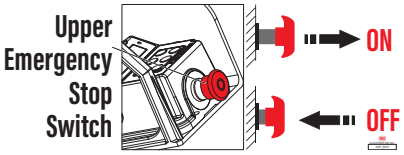

Test the Horn

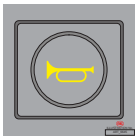

1. Push the horn button.
   - **Result:** The horn should sound.

Test Function Enable and Up/Down Functions

WARNING **Check the area above and around the machine for obstructions and electrical power lines before operating the machine.**

1. Press the lift function select button. The small green LED light should turn on.
2. Do not hold the Function Enable Switch on the control handle.
3. Slowly move the control handle forward/downward, then rearward/upward.
   - **Result:** No functions should operate.
4. Press and hold the Function Enable Switch on the control handle.
5. Slowly pull the control handle rearward/upward.
   - **Result:** The platform should raise. The pothole guards should deploy.
   - Regardless of if the Function Enable Switch is pressed or released, if no machine movement is made in 10 seconds then the current selection of Lift will time-out.
   - Release then press the Function Enable Switch to reactivate selected function.
6. Release the control handle.
   - **Result:** The platform should stop raising.
7. Press and hold the Function Enable Switch. Slowly push the control handle forward/downward.
   - **Result:** The platform should lower. The descent alarm should sound while the platform is lowering.
   - Regardless of if the Function Enable Switch is pressed or released, if no machine movement is made in 10 seconds then the current selection of Lift will time-out.
   - Release then press the Function Enable Switch to reactivate selected function.

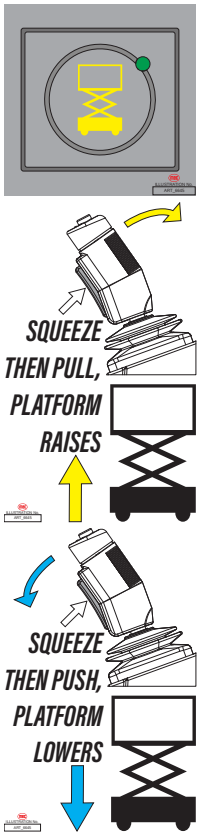

Test the Steering

Note: When performing the steer and drive function tests, stand in the platform facing the steer end of the machine.

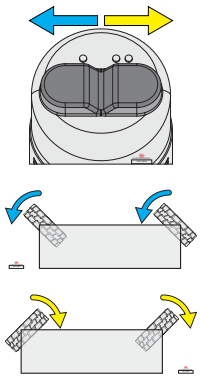

1. Press the drive function select button.
2. Press and hold the Function Enable Switch on the control handle.
3. Depress the thumb rocker switch on top of the control handle in the direction identified by the blue left arrow on the control panel.
   - **Result:** The steer wheels should turn in the direction that the blue left arrow points on the control panel.
4. Depress the thumb rocker switch in the direction identified by the yellow right arrow on the control panel.
   - **Result:** The steer wheels should turn in the direction that the yellow right arrow points on the control panel.

Test Drive and Braking

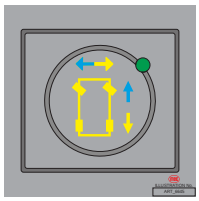

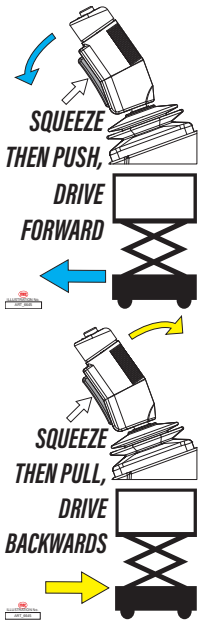

1. Press the drive function select button. The small green LED light should turn on.
2. Press and hold the Function Enable Switch on the control handle.
3. Slowly move the control handle forward/downward until the machine begins to move, then return the handle to the center position.
   - **Result:** The machine should move forward, in the direction of the steering wheels, then come to an abrupt stop.
   - Regardless of if the Function Enable Switch is pressed or released, if no machine movement is made in 10 seconds then the current selection of Drive will time-out.
   - Release then press the Function Enable Switch to reactivate selected function.
4. Press and hold the Function Enable Switch on the control handle.
5. Slowly move the control handle rearward/upward until the machine begins to move, then return the handle to the center position.
   - **Result:** The machine should move rearward, in the direction of the platform entry, then come to an abrupt stop.
   - Regardless of if the Function Enable Switch is pressed or released, if no machine movement is made in 10 seconds then the current selection of Drive will time-out.
   - Release then press the Function Enable Switch to reactivate selected function.

Note: The brakes are able to hold the machine on any slope it is able to climb, providing there is good surface traction.

Test Elevated Platform Drive Speed

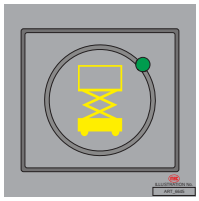

1. Press the lift function select button. The small green LED light should turn on.
2. Press the Function Enable Switch. Raise the platform approximately 8 feet (2.5 meters) from the ground.
   - **Result:** The pothole guards should deploy.
3. Press the drive function select switch. The small green LED light should turn on.
4. Press and hold the Function Enable Switch on the control handle.
5. Slowly move the control handle to the full drive position.
   - **Result:** The maximum achievable drive speed with the platform raised should not exceed the following speeds for their specified model:

- 1930+: 0.55 feet per second (16.7 centimeters per second).
- 2632+: 0.72 feet per second (22 centimeters per second).
- If the drive speed with the platform raised exceeds the speeds specified for their model, immediately tag and remove the machine from service.

Test the Tilt Sensor Operation

Note: Perform this test from the ground holding the platform controller. Do not stand in the platform!

1. Fully lower the platform.
2. Place a 1.5×3.5 inch (4×9 centimeter) or similar piece of wood under both wheels on one side and drive the machine up onto the wood.
3. Raise the platform approximately 6.6 feet (2 meters) from the ground.
   - **Result:** The platform should stop and the tilt alarm will sound at 180 beeps per minute. The platform control display should look similar to the image.

4. Press the drive function select button.
5. Press and hold the function enable switch on the control handle.
6. Move the control handle in the direction indicated by the yellow up arrow, then move the control handle in the direction indicated by the blue down arrow.
   - **Result:** The drive function should not work in either direction.
7. Lower the platform and drive the machine off the block.

Test the Pothole Guards

Note: The pothole guards should automatically deploy when the platform is raised. The pothole guards activate another limit switch which allows the machine to continue to function. If the pothole guards do not deploy, an alarm sounds and the machine will not drive and steer.

1. Raise the platform.
   - **Result:** When the platform is raised approximately 8 feet (2.5 meters) from the ground, the pothole guards should deploy.
2. Press on the pothole guards on one side, and then the other.
   - **Result:** The pothole guards should not move.
3. Lower the platform.
   - **Result:** The pothole guards should return to the stowed position.

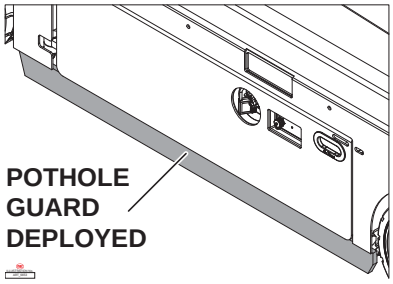

4. Place a 1.5×3.5 inch (4×9 centimeter) or similar piece of wood under a pothole guard. Raise the platform.
   - **Result:** When the platform is raised approximately 8 feet (2.5 meters) from the ground, the pothole alarm will sound at 180 beeps per minute, and the platform control screen should display “Pothole Guard Fault.”

5. Press the drive function select button.
6. Press and hold the function enable switch on the control handle.
7. Move the control handle in the direction indicated by the blue arrow, and then move the control handle in the direction indicated by the yellow arrow.
   - **Result:** The drive function should not work in either direction.
8. Press and hold the function enable switch on the control handle.
9. Depress the thumb rocker switch on top of the control handle in the direction identified by the

blue and yellow arrow on the control panel.

- **Result:** The steer function should not work in either direction.

10. Lower the platform and remove the 1.5×3.5 inch (4×9 centimeter) wood block.

Test the Indoor/Outdoor Functions

Note: Perform this test from the ground holding the platform controller. Do not stand in the platform!

Note: The Indoor/Outdoor mode can only be switched when the machine is in the stowed position.

WARNING **Check the area above and around the machine for obstructions and electrical power lines before operating the machine.**

---

1. Turn the key switch to ground control position.
2. Press and hold both the Function Enable Button and the Indoor/Outdoor button simultaneously for a few seconds to switch between Indoor and Outdoor mode. The upper or lower light will turn green to indicate which mode is currently selected, with the upper light indicated Indoor mode and the lower light indicating Outdoor Mode. The Upper Controls display will also show the currently selected mode.
3. Switch to the Outdoor mode.
4. Press and hold both the Function Enable Button and the blue arrow Platform Up button. Raise the platform to the highest position and measure the platform height.
   - **Result:** The platform height shall not exceed the specified height listed below depending on the model:
     - 1930+: 19 ft feet (5.8 meters)
     - 2632+: 20.0 ft feet (6.1 meters)
5. Lower the platform to the stowed position by pressing and holding both the Function Enable Button and the yellow arrow Platform Down button.
6. Switch to the Indoor mode.
7. Press and hold both the Function Enable Button and the blue arrow Platform Up button. Raise the platform to the highest position and measure the platform height.
   - **Result:** The platform height should be as specified below depending on the model:
     - 1930+: 19 ft feet (5.8 meters)
     - 2632+: 26.2 feet (8.0 meters)
8. Switch to the Outdoor mode.
   - **Result:** The alarm should sound.
9. Switch to the Indoor mode and fully lower the platform.

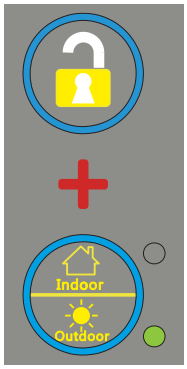

Outdoor Mode Selected

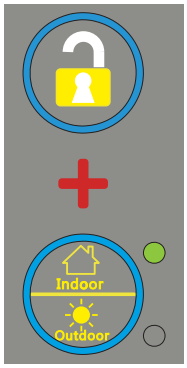

Indoor Mode Selected

Operating Instructions

WARNING **Check the area above and around the machine for obstructions and electrical power lines before operating the machine.**

Emergency Stop

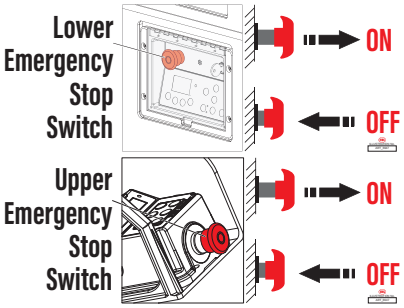

Push in the red Emergency Stop button to the Off position (pushed in) at the ground controls or the platform controls to stop all machine functions.

If any function operates when either red Emergency Stop button is pushed in, tag the machine and remove it from service. Repair the Emergency Stop function before using the machine.

Emergency Lowering

WARNING **If the control system fails while the platform is elevated, use the emergency lowering procedure to safely lower the platform. Do not climb down the scissor assembly or exit the platform.**

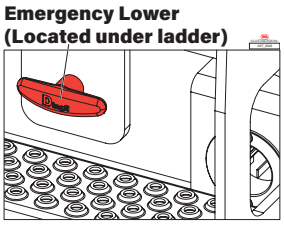

The Emergency Lowering System is used to lower the platform in case of power failure. Located under the entry ladder, pull the Emergency Lowering Handle to lower the platform.

Indoor/Outdoor Mode

The Lower Control Indoor/Outdoor button's light and the Upper Control display will show the current mode selected. To switch between Indoor/Outdoor Mode, at the lower controls press and hold both the Function Enable Button and the Indoor/Outdoor button for a few seconds.

The machine alarm will sound when switching between modes. The Lower Control Indoor/Outdoor button's light and the Upper Control display will indicate the new mode selected.

- **Indoor Mode**
  - When Indoor mode is selected, the Indoor/Outdoor button's upper green light will glow and the upper control box will also indicate Indoor mode has been selected.
  - Indoor Mode allows unrestricted platform height when working indoors and not exposed to wind.
- **Outdoor Mode**
  - When Outdoor mode is selected, the Indoor/Outdoor button's lower green light will glow and the upper control box will also indicate Outdoor mode has been selected.
  - Outdoor Mode restricts the platform's maximum height when working outdoors and possibly exposed to wind

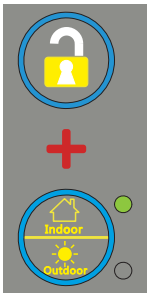

Platform Overload

ART_5863

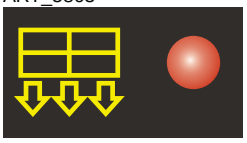

Indicates too much weight on the platform. Remove excess weight from the platform to restore function and continue.

Operation from Ground

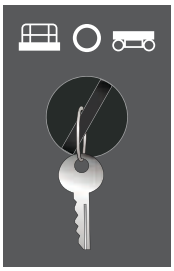

ART_4989

Drive and steer functions are not available from the ground controls.

1. Turn the Key Switch to ground control.
2. Pull the red Emergency Stop button out to the On position (pulled out) at both the ground and platform controls.

WARNING **Check the area above and around the machine for obstructions and electrical power lines before operating the machine.**

To Position Platform

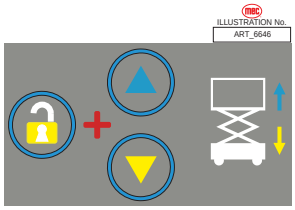

To activate the Platform Lift/Lower function, the Function Enable Button must be pushed and held while pressing one of the two colored buttons.

- Press the blue up arrow to raise the platform.
- Press the yellow down arrow to lower the platform.

Operation from Platform

ART_4987

1. Turn the Key Switch to platform control.
2. Pull the red Emergency Stop button out to the On position (pulled out) at both the ground and platform controls.

WARNING **Check the area above and around the machine for obstructions and electrical power lines before operating the machine.**

To Position Platform

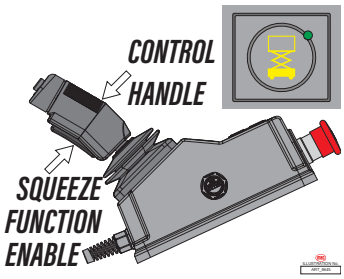

1. Press the lift function select button.
2. Press and hold the Function Enable Switch on the control handle.
3. Pull the control handle upward to raise the platform.
4. Push the control handle downward to lower the platform.

Regardless of if the Function Enable Switch is pressed or released, if no machine movement is made in 10 seconds then the current selection of Lift will time-out. Release then press the Function Enable Switch to reactivate selected function.

To Steer

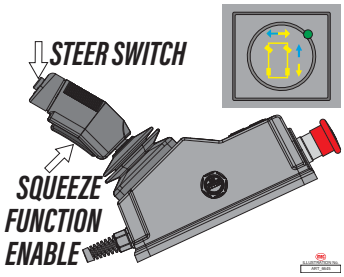

1. Press the drive function select button.
2. Press and hold the Function Enable Switch on the control handle.
3. Turn the steer wheels with the thumb rocker switch located on the top of the control handle.

To Drive

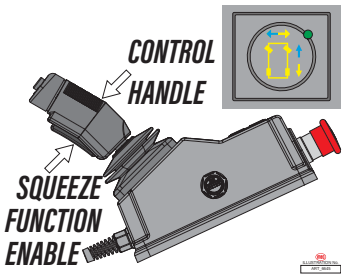

1. Press the drive function select button.
2. Press and hold the Function Enable Switch on the control handle.
   - **Increase speed:** Slowly move the control handle off center.
     - Push the control handle forward to move forward. Pull the control handle rearward to move rearward.
   - **Decrease speed:** Slowly move the control handle toward center.
   - **Stop:** Return the control handle to center or release the Function Enable Switch.

Regardless of if the Function Enable Switch is pressed or released, if no machine movement is made in 10 seconds then the current selection of Drive will time-out. Release then press the Function Enable Switch to reactivate selected function.

Use the color-coded direction arrows on the platform controls to identify the direction the machine will travel. Machine travel speed is restricted when the platform is raised.

Battery condition will affect machine performance. Machine drive speed and function speed will drop when the battery level indicator is flashing.

To Reduce Drive Speed

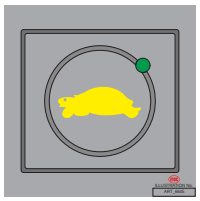

The drive controls can operate in two different drive speed modes. Press the drive speed button to select the desired drive speed.

- When the drive speed button light is on, slow drive speed mode is active.
- When the button light is off, fast drive speed mode is active.

Driving on a Slope in the Stowed Position

Determine the slope and side slope ratings for the machine and determine the slope grade.

- Maximum forward/rearward slope rating, stowed position 27% (15°).
- Maximum side slope rating, stowed position 14% (8°).

Note: Stowed position slope rating is subject to ground conditions and adequate traction.

To determine the slope grade

Measure the slope with a digital inclinometer OR use the following procedure. You will need:

- Carpenter's level
- Straight piece of wood, at least 3.3 feet (1 meter) long

- Tape measure

Lay the piece of wood on the slope. At the downhill end, lay the level on the top edge of the piece of wood and lift the end until the piece of wood is level.

While holding the piece of wood level, measure the distance from the bottom of the piece of wood to the ground. Divide the tape measure distance (rise) by the length of the piece of wood (run) and multiply by 100.

Example:

- Run = 12 feet / 3.6 meters
- Rise = 12 inches / 0.3 meters
- 12 inches ÷ 12 feet = 0.083 × 100 = 8.3%
- 0.3 meters ÷ 3.6 meters = 0.083 × 100 = 8.3%

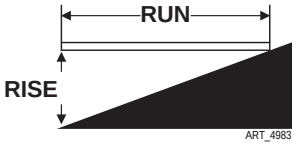

If the slope exceeds the maximum slope or side slope rating, the machine must be winched or transported up or down the slope. See Transport and Lifting section.

Operation from Ground with Controller

WARNING **Use extreme caution when operating the machine with the controller from the ground.**

Maintain safe distances between operator, machine and fixed objects. Be aware of the direction the machine will travel when using the controller.

Battery Level Indicator

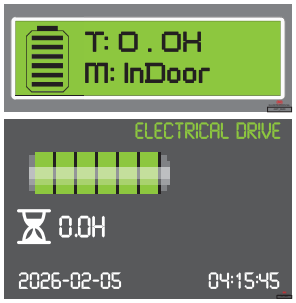

Use the display readout to determine the battery level.

- Upper Control display will look similar to the top image.
- Lower Control display will look similar to the bottom image.

Maintenance Lock

WARNING

DEATH OR SERIOUS INJURY HAZARD!

NEVER perform work or inspection on the machine with the platform elevated without first blocking the scissor assembly with the Maintenance Lock.

On machines equipped with two Maintenance Locks, both must be set to safely work on or inspect the machine.

DO NOT engage the Maintenance Locks unless the platform in empty of tools and material.

On the 1930+ the Maintenance Lock is located at the rear of the scissor stack. The 2632+ has the Maintenance Lock located at the front of the scissor stack.

1. Raise the platform approximately just high enough to rotate the Maintenance Lock into place.
2. Lift the Maintenance Lock, move it to the center of the scissor arm. For the 1930+ rotate the Maintenance Lock down to a vertical position, but for the 2632+ rotate the Maintenance Lock up.

CAUTION

The Maintenance Lock must engage the scissor section above it.

DO NOT set it so that it hangs down.

Lower the platform until the Maintenance Lock rests gently on the link. To remove the Maintenance Lock, raise the machine approximately 1 foot (0.3 meters) higher then swing the Maintenance Lock down into its stowed position. Keep clear of the Maintenance Lock when lowering the platform.

Front Location

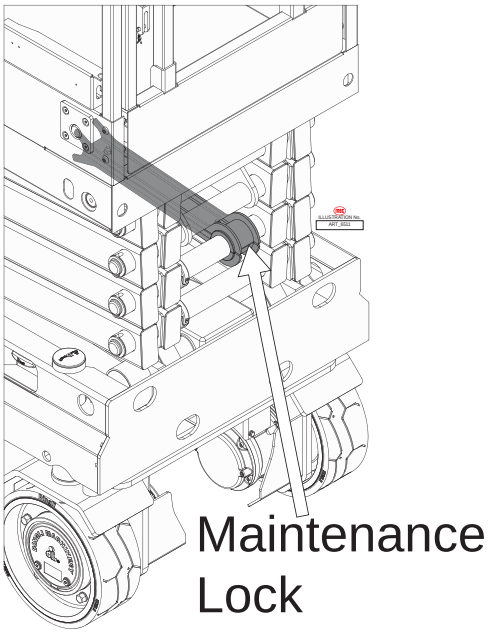

Rear Location

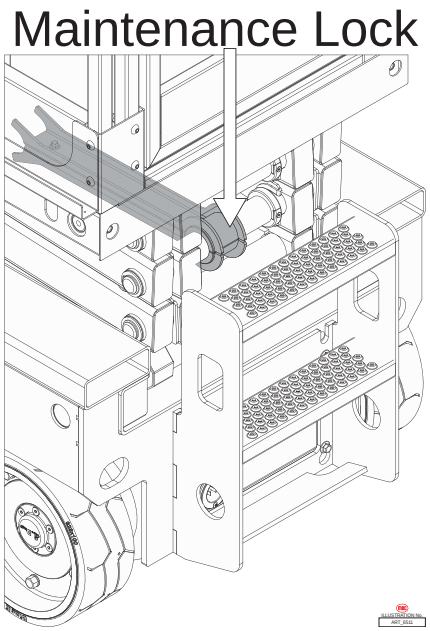

How to fold down the Guardrails

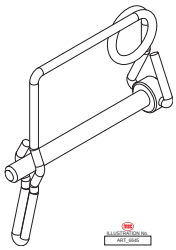

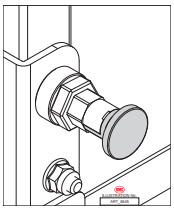

The platform railing system consists of three fold down rail section for the extension deck and three sections for the main deck. Depending on the model, all the sections will either be held in placed by spring pins (top image) entirely, or a combination of spring pins and pull-knobs (bottom image).

Each spring pin is secured to a guardrail with a cable lanyard to prevent loss. If the lanyard is broken or not present, replace the spring pin in the hole it came out of to prevent loss.

1930+ Guardrail Instructions

1. Fully lower the platform and retract the platform extension.
2. Remove the platform controls.
3. From inside the platform, Pull and rotate 90° the two pull-knobs to fold down the front rail. Keep hands free of pinch points.
4. Fold down the extension platform right rail assembly. Keep hands clear of pinch points.
5. Fold down the extension platform left rail assembly. Keep hands clear of pinch points.
6. Carefully open the gate and move to the rear step or the ground.
7. Pull and rotate 90° the pull-knob to fold down the right rail. Keep hands free of pinch points
8. Pull and rotate 90° the pull-knob to fold down the left rail. Keep hands free of pinch points
9. Pull and rotate 90° the two pull-knobs to fold down the entry gate top rail. Keep hands free of pinch points.

2632+ Guardrail Instructions

1. Fully lower the platform and retract the platform extension.
2. Remove the platform controls.
3. From inside the platform, remove the two front extension deck wire lock pins.
4. Fold down the front rail assembly. Keep hands clear of pinch points.
5. Fold down the extension platform left rail assembly. Keep hands clear of pinch points.
6. Fold down the extension platform right rail assembly. Keep hands clear of pinch points.
7. Carefully open the gate and move to the rear step or the ground.
8. From the rear step or from the ground, remove the left rear main deck wire lock pins.
9. Fold down the left rail assembly. Keep hands clear of pinch points.
10. Replace the removed pin back into rear rail bracket.
11. Remove the right rear main deck wire lock pins.
12. Fold down the right rail assembly. Keep hands clear of pinch points.
13. Pull and rotate 90° the two pull-knobs to fold down the entry gate top rail. Keep hands free of pinch points.

To return the machine to normal operation mode:

- Lift all rails into their upright position, then secure them with the spring pins and/or pull-out knobs.
- Check that the Personnel Entry closure functions properly.
- Position the platform control box on the front right rail of the platform.

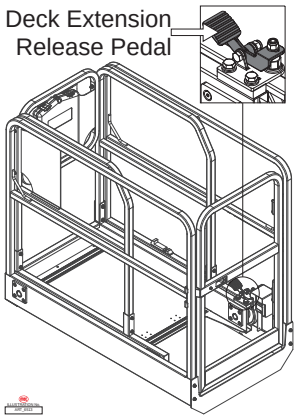

DO NOT use the machine until all closures and guard rails are in position and properly secured.

To extend and retract the Deck Extension

1. Press the platform lock pin foot pedal on the extension deck.
2. Push the platform extension guardrail to extend the platform to the desired position.

Do not stand on the platform extension while extending or retracting it.

WARNING **IF THE ROLL-OUT DECK IS EXTENDED CHECK FOR HAZARDS UNDER DECK AREA BEFORE LOWERING PLATFORM.**

Error Indicator Readout

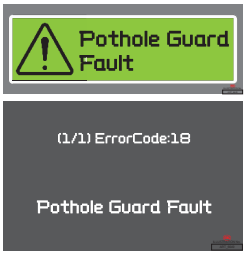

The Error Indicator Readout is located at the Upper Controls station. Consult the Service & Parts Manual for Alarm Code descriptions. Manuals are available free online at www.MECawp.com.

The top image is an example of an error displayed on the upper control display, and the bottom image shows an example of the same error displayed on the lower control display.

If a load in excess of the rated load is detected the lift or lower will be restricted. The load must be removed before movement can occur. The platform overload is measured when the machine is stationary and not in motion.

Shutdown Procedure

When finished with the machine, place the platform in the stowed position. Park the machine on a level surface. Turn the Key Switch to the Off position and remove the key to prevent unauthorized use. Carefully exit the platform using a constant three (3) point dismount/grip.

Always make sure the Main Power Switch is in the Off position when leaving the machine at the end of the work day. The Main Power Switch can also be locked with a padlock to prevent unauthorized use. Charge the batteries.

Sheet Materials Rack

WARNING

SHEET MATERIAL WEIGHT IS PART OF THE TOTAL PLATFORM CAPACITY. THIS MAY LIMIT CAPACITY TO ONE OCCUPANT.

Use of the Sheet Materials Rack is for Indoor use only!

DO NOT exceed the Sheet Materials Rack capacity listed in the table below.

DO NOT allow any personnel to stand below the machine when the Sheet Materials is in use.

Fasten the material securely with straps or optional material clamps until use.

Certain machine models are equipped with a Sheet Materials Rack. Sheet material may be secured outside the platform to this rack up to the capacities listed in the table below. Maximum size of material on the Sheet Material Rack is 4×8 feet (1.2×2.4 meters) for indoor use. All material should be centered on the Sheet Materials Rack.

Use caution when driving the machine or elevating the platform when the Sheet Material Rack is loaded. Secure the sheets to the platform.

Model	Sheet Material Rack Capacity
1930+ / 2632+	110 lbs (50 kg)

Battery Charging

WARNING

The charger surface can get hot while operating. Contact with the skin or surrounding materials should be avoided.

To reduce the risk of an electric shock, connect only to a properly grounded single-phase (3 wire) outlet.

Do not use an external charger or booster battery.

Charge the battery in a well-ventilated area.

CAUTION

Use proper AC input voltage for charging as indicated on the machine.

Use only MEC authorized batteries and chargers.

The charger will indicate the status of the charge cycle.

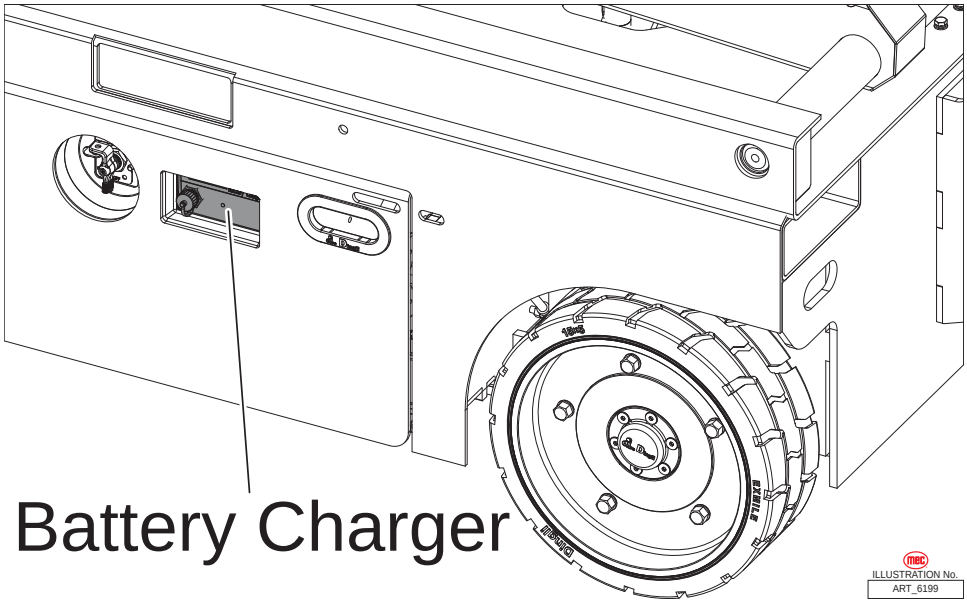

Maintenance

DO NOT operate this machine until you have read and understood this manual, have performed the Workplace Inspection, Pre-Start Inspection and Routine Maintenance, and have completed all the test operations detailed in the Operating Instructions section.

The operator must conduct a Pre-Start Inspection of the machine and test all functions before each work shift to check for damage, malfunction and unauthorized modification. The inspection is designed to discover if anything is apparently wrong with a machine before the operator performs the function tests.

Tag and remove a damaged, malfunctioning or modified machine from service. DO NOT use a damaged, malfunctioning or modified machine.

Use the Pre-Start Inspection to determine what Routine Maintenance is required. The operator may perform only the routine maintenance items specified in this manual.

IMPORTANT: Scheduled maintenance inspection checklists are included in this manual for use only by qualified service technicians. Only qualified service technicians may perform repairs to the machine. After repairs are completed, the operator must perform a Pre-Start Inspection before proceeding to the Functions Test.

DANGER

Hydraulic fluid under pressure can penetrate and burn skin, damage eyes, and may cause serious injury, blindness, and death. Repair leaks immediately. Fluid leaks under pressure may not always be visible. Check for pin hole leaks with a piece of cardboard, not your hand.

WARNING

NEVER perform work or inspection on the machine with the platform elevated without first blocking the scissor assembly with the Maintenance Lock (see page 27).

Perform scheduled maintenance at recommended intervals. Failure to perform scheduled maintenance at recommended intervals may result in a defective or malfunctioning machine and may result in injury or death of the operator. Keep maintenance records current and accurate.

Immediately report any damage, defect, unauthorized modification or malfunction to your supervisor. Any defect must be repaired prior to continued use. DO NOT use a damaged, modified or malfunctioning machine.

CAUTION

Never leave hydraulic components or hoses open. Plug all hoses and fitting immediately after disassembly to protect the system from outside contamination (including rain).

Never open a hydraulic system when there are contaminants in the air.

CAUTION

Always clean the surrounding area before opening hydraulic systems.

Use only recommended lubricants. Improper lubricants or incompatible lubricants may cause as much damage as no lubrication.

Watch for makeshift "fixes" which can jeopardize safety as well as lead to more costly repair.

Inspection and maintenance should be performed by qualified personnel familiar with the equipment.

Routine Maintenance

WARNING

NEVER perform work or inspection on the machine with the platform elevated without first blocking the scissor assembly with the Maintenance Lock.

See page 27 for instructions.

IMPORTANT: The operator may perform only maintenance items on the Pre-Start Inspection Checklist. Frequent and Annual maintenance must be performed by qualified service technicians.

Pre-Start Inspection

Perform routine maintenance as identified in the Pre-Start Inspection Checklist on page 35.

Frequent and Annual Maintenance

Frequent Inspection Checklists and Annual Inspection Reports must be completed by qualified service technicians trained and authorized to perform maintenance on this machine, and must be done in accordance with the procedures outlined in the service manual. Scheduled maintenance inspection checklists are included in this manual for use by qualified service technicians.

IMPORTANT: In addition to the Frequent Inspection Checklists and Annual Inspection, the 30-Day Service must be performed after the first 30 days or 40 hours of initial service. See the Service & Parts Manual for specific instructions.

Machines that have been out of service for more than three months must have the Frequent Inspection Checklists completed before returning to service.

Lubrication

Operator may perform routine maintenance only. Lubrication listed as Scheduled Maintenance must be performed by a qualified service technician.

1930+
2632+

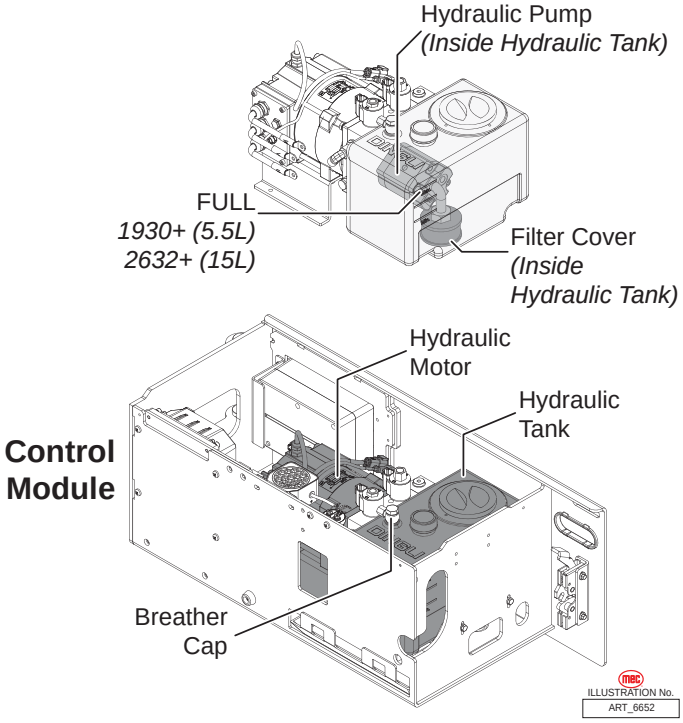

No.	Item	Specification	Frequency
1	Hydraulic Reservoir	Mobile Fluid DTE 10, DTE 13 M, or AW32 **Do not substitute other fluids as pump damage may result.** Check as shown above with platform in the stowed position. Fill as needed.	**Routine Maintenance** • Check hydraulic oil level every week. **Scheduled Maintenance** • Change every 3 years or 750 hours, whichever occurs first.
2	Hydraulic Cap Breather Filter and Hydraulic Filter	Breather Filter (Located inside Filler Cap) Hydraulic Filter Canister	**Scheduled Maintenance** **Normal Conditions** • Change yearly or 500 hours, whichever occurs first. **Severe Conditions--very dusty, exceptionally hot or exceptionally cold conditions** • Change every six months or 250 hours, whichever occurs first.

Pre-Start Inspection Checklist

The operator must conduct a Pre-Start Inspection of the machine before each work shift.

DO NOT use a damaged or malfunctioning machine.

	Be sure that the operator's manual is complete, legible and in a water-tight bag in the storage container located in the platform.
	Be sure that all decals are legible and in place. See Decals section.
	Check for hydraulic oil leaks.
	Check for battery fluid leaks.

Check the following components or areas for damage, improperly installed or missing parts and unauthorized modifications:

	Electrical components, wiring and electrical cables
	Battery connections
	Hydraulic hoses, fittings, cylinders and manifolds
	Battery pack and connections
	Drive motors
	Slide blocks/wear pads
	Tires and wheels
	Ground strap
	Limit switches, alarm and beacon
	Nuts, bolts and other fasteners
	Platform entry gate
	Beacons and alarms
	Maintenance Lock
	Platform extension
	Scissor pins and retaining fasteners
	Platform control handle
	Brake release components
	Pothole guards

Check entire machine for:

	Cracks in welds or structural components
	Dents or damage to machine
	Be sure that all structural and other critical components are present and all associated fasteners and pins are in place and properly tightened
	Be sure that guard rails are properly installed and secured, and that all pins and bolts are properly fastened.
	Be sure that the chassis trays are closed and latched and the batteries are properly connected.

WARNING

NEVER perform work or inspection on the machine with the platform elevated without first blocking the scissor assembly with the Maintenance Lock. See page 27 for instructions.

Frequent Inspection Checklist

WARNING **This checklist must be used at 6-month intervals or every 250 hours of machine use, whichever occurs first. Failure to do so could result in death or serious injury.**

Frequent Maintenance Inspections should be conducted by qualified service technicians only. Photocopy this page for reuse. Keep inspections records up to date. Record and report all discrepancies to your supervisor. See the Service & Parts Manual for specific instructions.

Model Number _____ **Serial Number** _____ **Hour Meter Reading** _____

	Perform all checks listed on Pre-Start Inspection.
	Grease the Steering Yokes (Chevron Ultra-Duty Grease EP NLGI 1 Lithium-based or equivalent)
	Inspect the condition of hydraulic fluid in the reservoir. Oil should be a clear and amber in color.
	Batteries (Corrosion, connections tight)(MEC uses maintenance-free AGM-type batteries that are sealed and can't have fluid-levels checked.)
	Electrical Wiring (Not pinched or damaged.)
	Tires and Wheels (Look for damage to rubber.)
	Emergency Stop (See "Section 7 - Operating Instructions & Functions Tests" on page 17.)
	Key Switch (See "Section 7 - Operating Instructions & Functions Tests" on page 17.)
	Horn (See "Section 7 - Operating Instructions & Functions Tests" on page 17.)
	Drive Brakes (The brakes are able to hold the machine on any slope it is able to climb, providing there is good surface traction.)
	Drive Speed, Stowed Platform (See "Section 7 - Operating Instructions & Functions Tests" on page 17.)
	Drive Speed, Raised Platform (See "Section 7 - Operating Instructions & Functions Tests" on page 17.)
	Drive Speed, Slow (See "Section 7 - Operating Instructions & Functions Tests" on page 17.)
	Tank Venting System (See "Section 9 - Maintenance" on page 32.)
	Latch Components
	Test Down & Pothole Limit Switches (See "Section 7 - Operating Instructions & Functions Tests" on page 17.)
	Test Up Limit Switches (See "Section 7 - Operating Instructions & Functions Tests" on page 17.)

Additional maintenance requirements for severe conditions

If the machine is used in very dusty, exceptionally hot or exceptionally cold conditions, replace the Hydraulic Cap Breather Filter and Hydraulic Filter (every 6 months or 250 hours, whichever comes first).

Date _____ Inspected By _____

Maintenance Inspection Report

+Series Scissors

Fleet Equipment Number _____ Date _____
Inspector Name _____ Inspector Co. _____
Model Number _____ Address _____
Serial Number _____ _____
Hour Meter _____ Signature _____
Machine Owner & address _____

Maintain all service records in accordance with ANSI A92.24-2019

***** If an inspection receives an “N”, remove from service. Once repaired, place an “R” in the box.
***** Refer to the proper service manual for specific information, settings and torque specifications.

Key **Y** = Yes, Acceptable **N** = No, Remove from Service **R** = Repaired **0** = Not Applicable

☐ **QUARTERLY** - Inspect only those marked “Q” ☐ **ANNUAL** - Inspect all items

	Q/A	Y/N/O	R
DECALS:			
Legible - undamaged/readable	Q		
Capacity decal correct for model	Q		
RAILS:			
Not damaged, all in place	Q		
All rail fasteners secure	Q		
Entry gate secure, closes properly	Q		
Manual box in good condition	Q		
Operators Manual in manual box	Q		
PLATFORM EXTENSION:			
Rolls in and out freely	Q		
Lock holds deck in place	Q		
Release pedal moves freely (lube)	Q		
ELEVATING ASSEMBLY:			
Scissor Slide Blocks, lubed	Q		
Maintenance Stand, good Cond	Q		
Beam structures: Straight, no cracks	A		
Welds: secure, no cracks	A		
Retaining Rings	A		
Cylinder Pins, secure	A		
ELECTRICAL:			
GFCI operates correctly	Q		
Wire harnesses good cond, secure	A		
Comm cable no damage, secure	A		
BASE:			
Fasteners tight	Q		
Cover panels secure	Q		
Welds	A		

	Q/A	Y/N/O	R
WHEELS:			
Tire damage	Q		
Lug nuts (Wheel mounting) torqued correctly	Q		
King Pins lubed	A		
COMPONENT AREA:			
Hydraulic - no leaks	Q		
Hydraulic tank, correct level	Q		
Hoses not damaged - Fittings tight	Q		
Valve manifold secure, no leaks	Q		
Power unit secure, no leaks	Q		
Batteries properly filled and cables clean	Q		
Emergency stop, cuts power/operation	Q		
Battery switch cuts battery feed	Q		
Plastic cover secure (door end 2632-4555 only)	A		
Hydraulic tank, oil clean	A		
Replace Hydraulic Filter (if equipped)	A		
Clean or replace tank breather filter	A		
OPERATIONAL INSPECTION:			
All functions, operate smooth and quiet	Q		
All functions, speeds correct.	Q		
Upper control box, operates correctly	Q		
Emergency Down, operates correctly	Q		
Limit switches slows drive when elevated	Q		
Pothole switch test	Q		
Steering pressure relief, set correctly	A		
Lift pressure relief, set correctly	A		
Check Platform Overload Sensing operation	A		

**For machine equipped with Platform Overload Protection system only

Decals, 1930+

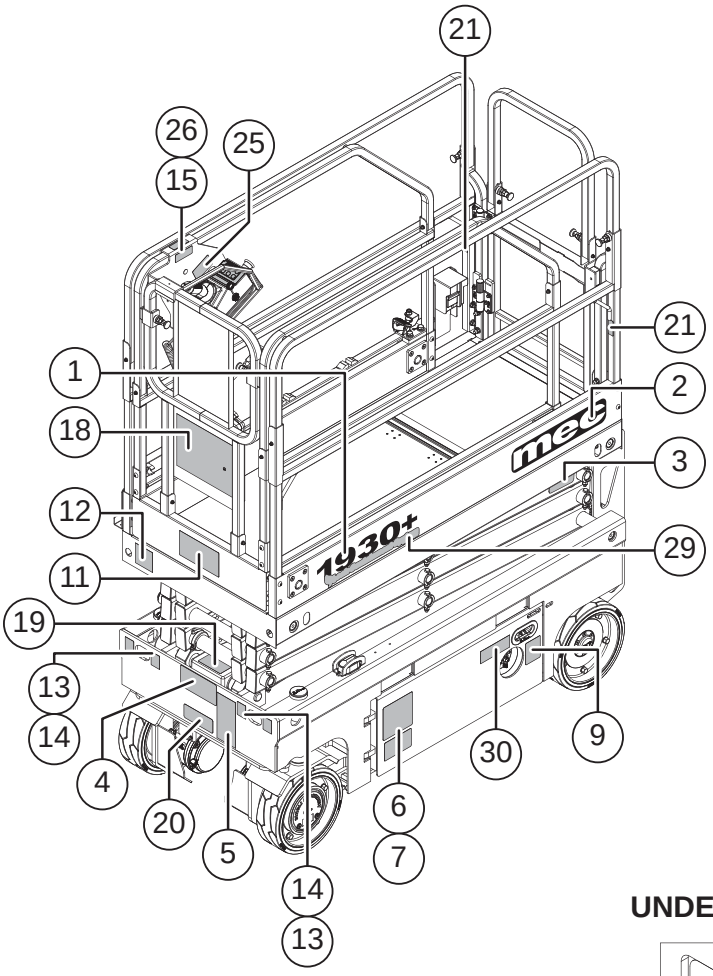

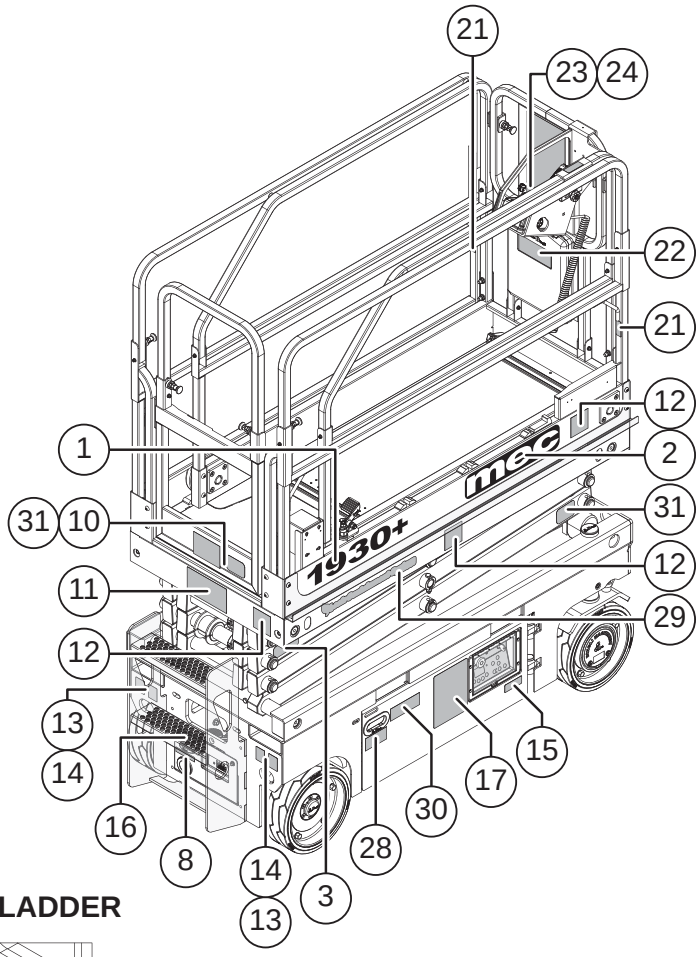

UNDER LADDER

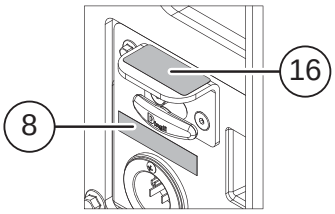

PLATFORM EXTENSION DECK

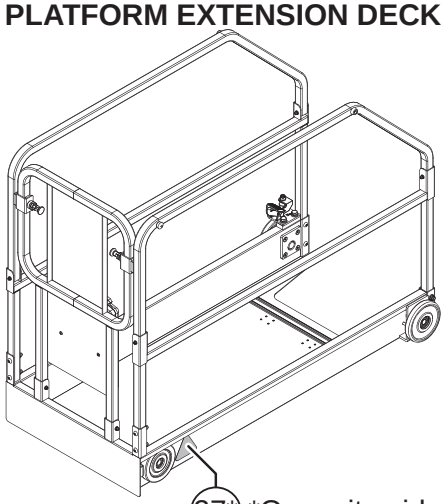

*Opposite side also.

1 1930+ 97346 Qty. - 2	**2** mec 94114 Qty. - 2	**3** 9313011 41638 Qty. - 2	**4** DANGER Crushing Hazard Contact with moving parts will result in death or serious injury. • Do not stand under or around platform during operation. • Keep away from moving parts. Failure to follow these instructions could result in death or serious injury. 9413013UM 41646 Qty. - 1	**5** 95215 Qty. - 1
6 DANGER Explosion/Burn Hazard 41641 Qty. - 1	**7** WARNING Tip-over Hazard Do not use batteries that weigh less than the original equipment. Batteries are used as counterweight and are critical to machine stability. Each battery must weigh **80 lbs / 36,3 kg.** The batteries must weigh a minimum of **320 lbs / 145,2 kg.** 48485 R0 48485 Qty. - 1	**8** BATTERY CHARGER AND POWER TO PLATFORM 94659 Qty. - 1	**9** NOTICE Cut off the power when the machine is repaired or not used for long period. ON OFF 49749 Qty. - 1	**10** mec® 95301 Qty. - 1
11 WARNING 600 LBS (272 KG) 300 LBS (136 KG) 300 LBS (136 KG) OUTDOOR 28 MPH (12,5 M/S) 45 LBS (200 N) 80% HEIGHT 600 LBS (272 KG) 300 LBS (136 KG) 300 LBS (136 KG) INDOOR 0 MPH (0 M/S) 90 LBS (400 N) 49607 R0 49607 Qty. - 2	**12** WARNING INDOOR ONLY MATERIAL RACK MATERIAL CAPACITY (110 LBS / 50 KG) SHEET MATERIAL WEIGHT IS PART OF THE 600 LBS / 272 KG TOTAL PLATFORM CAPACITY. THIS MAY LIMIT CAPACITY TO ONE OCCUPANT. SEE MANUAL FOR SAFE USE! 49750 R0 49750 Qty. - 4	**13** 09310003.B 49748 Qty. - 4	**14** 09310002.B 45899 Qty. - 4	**15** Refer the operator to the instructions for use. 9314013 41639 Qty. - 2
16 EMERGENCY LOWER Pull knob to lower platform 9311017 41636 Qty. - 1	**17** WARNING 41649 Qty. - 1	**18** mec® MEC AERIAL WORK PLATFORMS 1401 S. MADERA AVE. KERMAN, CA 93630 USA 1-559-842-1500 www.MECawp.com 90719 Qty. - 1	**19** DANGER Tip-over Hazard Altering or disabling limit switches can result in machine tip-over. Machine tip-over will result in death or serious injury. Do not alter or disable limit switch(s). 9411015UM 41642 Qty. - 1	**20** mec DIRECT ELECTRIC DRIVE 94423 Qty. - 1
21 Restraint only 1 Occurrence 9414123UM 41648 Qty. - 4	**22** WARNING Upon deliveries of this machine through sale, rental, lease, or any other transfer of possession, the following shall be done: 1. The entity transferring possession has done so based on all available information regarding where, when and how this machine will be used and operated. 2. The entity accepting possession has been familiarized and trained as set forth by the manufacturer and in full compliance with all applicable codes, standards, regulations and laws. Failure to adhere to the above requirements may result in death, personal injury, or property damage. Operator's Manual inside this box. 8911 8911 Qty. - 1	**23** DANGER 41652 Qty. - 1	**24** DANGER Tip-over Hazard If tilt-alarm sounds, unit is on a severe slope. Death or serious injury could occur. 1.Lower the platform. 2.Move the machine to level surface. 9414123UM 41647 Qty. - 1	**25** DRIVE REVERSE/ LIFT UP DRIVE FORWARD/ LOWER 94120 Qty. - 1
26 Platform controller normal position. 9314015 41640 Qty. - 1	**27** 91850 Qty. - 2	**28** WARNING DO NOT POWERWASH OR SPRAY ELECTRONIC COMPONENTS OR CONNECTORS. MOISTURE MAY CAUSE DAMAGE AND/OR ERRATIC OPERATION 90732 90732 Qty. - 1	**29** Leak Containment System Patent 11,112,060 94866 Qty. - 2	**30** Leak Containment System Patent 11,112,060 94867 94867 Qty. - 2
31 MEC - Model Info Text *1930PLUS* to 1 (844) 483-4669 Manuals Brochures Warranty & More 97487 Qty. - 2				

Decals, 2632+

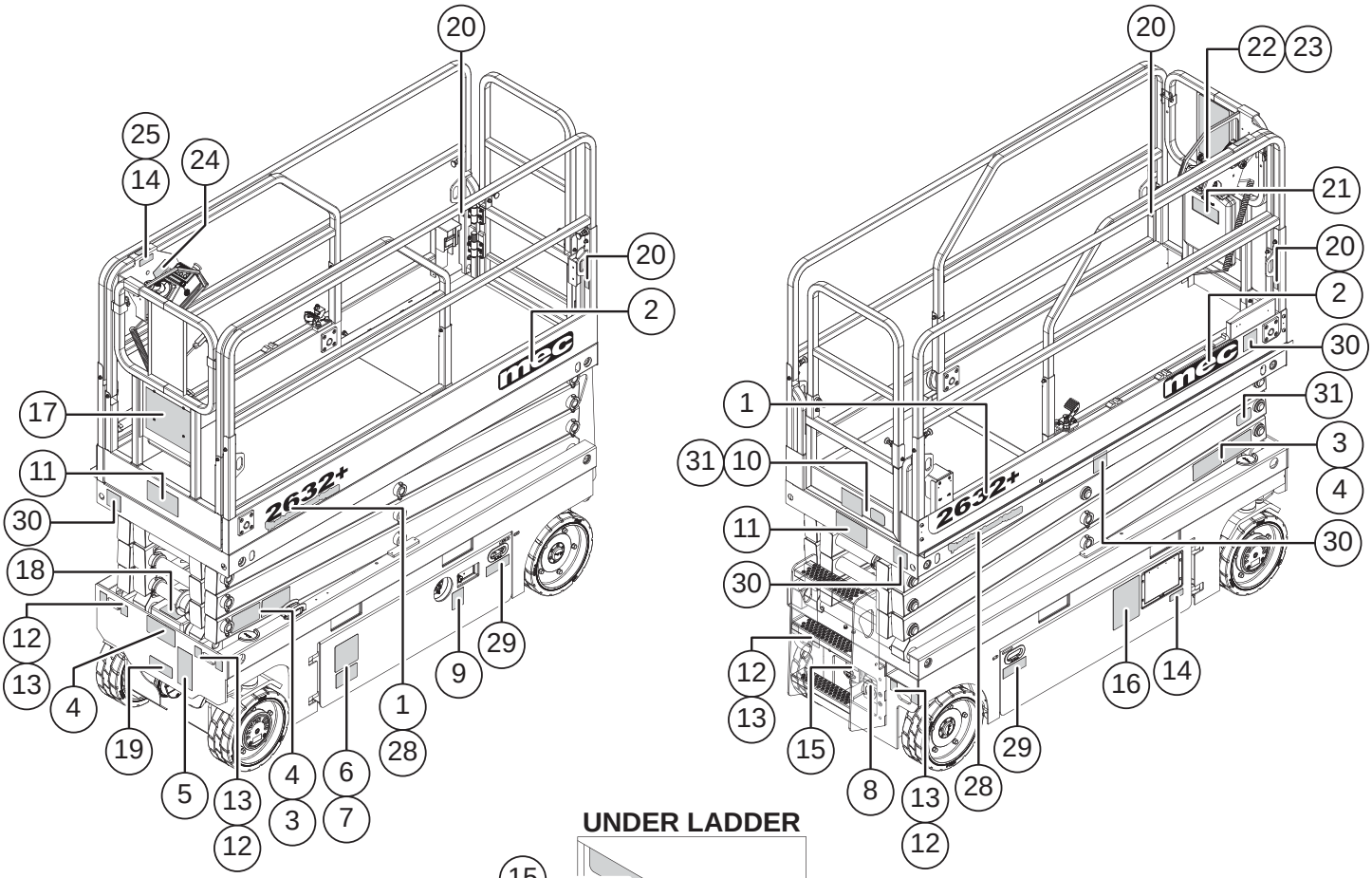

UNDER LADDER

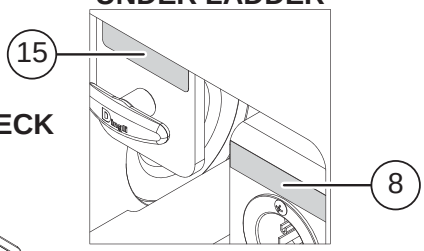

PLATFORM EXTENSION DECK

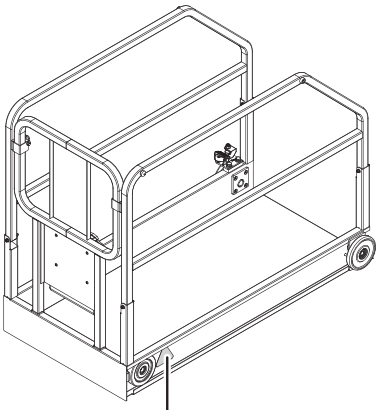

*Opposite side also.

CONTROL MODULE

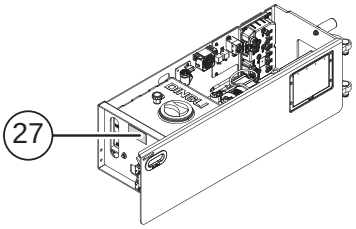

1 2632+ 97503 Qty. - 2	**2** mec 94114 Qty. - 2	**3** DANGER Crushing Hazard Death or serious injury can result from contact with moving scissor arms. Don't engage safety arm unless unload platform. Engage safety arm before performing maintenance or repair. 941301UM 41748 Qty. - 2	**4** DANGER Crushing Hazard Contact with moving parts will result in death or serious injury. • Do not stand under or around platform during operation. • Keep away from moving parts. Failure to follow these instructions could result in death or serious injury. 941301SUM 41646 Qty. - 3	**5** 95215 Qty. - 1
6 DANGER Explosion/Burn Hazard 41641 Qty. - 1	**7** WARNING Tip-over Hazard Do not use batteries that weigh less than the original equipment. Batteries are used as counterweight and are critical to machine stability. Each battery must weigh **80 lbs / 36.3 kg.** The batteries must weigh a minimum of **320 lbs / 145.2 kg.** 48485 R0 48485 Qty. - 1	**8** BATTERY CHARGER AND POWER TO PLATFORM 94659 Qty. - 1	**9** NOTICE Cut off the power when the machine is repaired or not used for long period. ON OFF 49749 Qty. - 1	**10** mec® 95301 Qty. - 1
11 WARNING OUTDOOR 600 LBS (272 KG) 300 LBS (136 KG) 300 LBS (136 KG) 28 MPH (12.5 M/S) 45 LBS (200 N) 80% HEIGHT INDOOR 600 LBS (272 KG) 300 LBS (136 KG) 300 LBS (136 KG) 0 MPH (0 M/S) 90 LBS (400 N) 49607 R0 49607 Qty. - 2	**12** 09310003.B 49748 Qty. - 4	**13** 09310002.B 45899 Qty. - 4	**14** Refer the operator to the instructions for use. 9314013 41639 Qty. - 2	**15** EMERGENCY LOWER Pull knob to lower platform 9311017 41636 Qty. - 1
16 WARNING 41649 Qty. - 1	**17** mec® MEC AERIAL WORK PLATFORMS 1401 S. MADERA AVE. KERMAN, CA 93630 USA 1-559-842-1500 www.MECawp.com 90719 Qty. - 1	**18** DANGER Tip-over Hazard Altering or disabling limit switches can result in machine tip-over. Machine tip-over will result in death or serious injury. Do not alter or disable limit switch(s). 941101SUM 41642 Qty. - 1	**19** mec DIRECT ELECTRIC DRIVE 94423 94423 Qty. - 1	**20** Restraint only 1 Occurrence 9414123UM 41648 Qty. - 4
21 WARNING Upon deliveries of this machine through sale, rental, lease, or any other transfer of possession, the following shall be done: 1. The entity transferring possession has done so based on all available information regarding where, when and how this machine will be used and operated. 2. The entity accepting possession has been familiarized and trained as set forth by the manufacturer and in full compliance with all applicable codes, standards, regulations and laws. Failure to adhere to the above requirements may result in death, personal injury, or property damage. Operator's Manual inside this box. 8911 8911 Qty. - 1	**22** DANGER 41749 Qty. - 1	**23** DANGER Tip-over Hazard If tilt-alarm sounds, unit is on a severe slope. Death or serious injury could occur. 1.Lower the platform. 2.Move the machine to level surface. 941410SUM 41647 Qty. - 1	**24** DRIVE REVERSE/ LIFT UP DRIVE FORWARD/ LOWER 94120 94120 Qty. - 1	**25** Platform controller normal position. 9314015 41640 Qty. - 1
26 91850 Qty. - 2	**27** WARNING DO NOT POWERWASH OR SPRAY ELECTRONIC COMPONENTS OR CONNECTORS. MOISTURE MAY CAUSE DAMAGE AND/OR ERRATIC OPERATION 90732 90732 Qty. - 1	**28** Leak Containment System 94866 Qty. - 2	**29** Leak Containment System Patent 11,112,060 94867 94867 Qty. - 2	**30** WARNING INDOOR ONLY MATERIAL RACK MATERIAL CAPACITY (110 LBS / 50 KG) SHEET MATERIAL WEIGHT IS PART OF THE 600 LBS / 272 KG TOTAL PLATFORM CAPACITY. THIS MAY LIMIT CAPACITY TO ONE OCCUPANT. SEE MANUAL FOR SAFE USE! 49750 R0 49750 Qty. - 4
31 MEC - Model Info Text 2632PLUS to 1 (844) 483-4669 Manuals Brochures Warranty & More 97489 Qty. - 2				

Serial Plate

Serial Plate Location

The serial plate is attached to the machine at the time of manufacture. Important information about the machine is recorded on the serial plate.

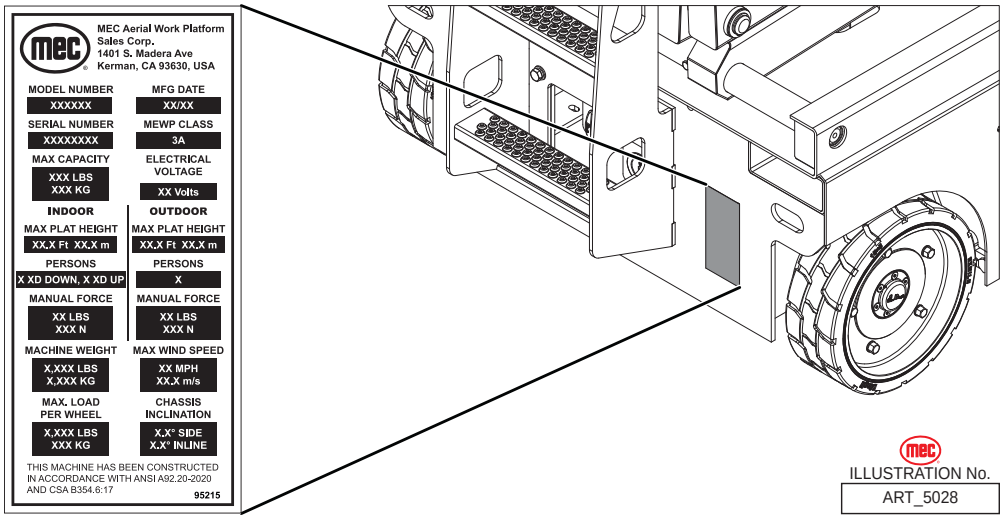

Serial Plate Description

MODEL NUMBER: Identifies the machine.

MFG DATE: Month / Year of manufacture.

SERIAL NUMBER: Identifies a machine with reference to its original owner. Refer to the number when requesting information or ordering parts.

MEWP CLASS: MEWP=Mobile Elevating Work Platform

MAX. CAPACITY: The maximum safe load (material, persons + equipment) which can be correctly placed on the platform at any elevation.

ELECTRICAL VOLTAGE: The voltage at which this machine operates.

MAX. PLATFORM HEIGHT (INDOOR): The indoors maximum attainable height measured from level ground surface to platform floor.

PERSONS (INDOOR): The maximum number of occupants indoors.

MANUAL FORCE (INDOOR): Amount of manual force need to move machine indoors.

MAX. PLATFORM HEIGHT (OUTDOOR): The outdoors maximum attainable height measured from level ground surface to platform floor.

PERSONS (OUTDOOR): The maximum number of occupants outdoors.

MANUAL FORCE (OUTDOOR): Amount of manual force need to move machine outdoors.

MACHINE WEIGHT: The weight of the machine with no options.

MAX WIND SPEED: The maximum wind speed for safe working conditions.

MAX. LOAD PER WHEEL: The maximum safe weight applied to each wheel. Calculated with all available options installed. Fw = 30% (Wm + Wc + Wopt)

CHASSIS INCLINATION: The maximum amount of tilt for safe working conditions.

Troubleshooting

WARNING

Should you experience erratic operation or notice any malfunction while operating this machine, discontinue use immediately.

Call for assistance and report the incident to your supervisor, and do not use the machine until it has been checked by a trained, qualified mechanic.

Machine functions will not operate

- Master disconnect turned on?
- Batteries properly connected?
- Batteries fully charged?
- Key Switch in proper position?
- Both Emergency Stop Switches reset?
- Function Enable Switch not activated?
- Hydraulic fluid level low?
- Obvious fluid leak or damaged component?
- Wires disconnected, broken, or loose?
- Diagnostic panel on?
- Platform Control Box Fault Code present?
  - Contact MEC Technical Support or refer to service manual. Manuals are available free online at www.MECawp.com.

Transport and Lifting Instructions

Safety Information

WARNING

This section is provided for reference and does not supersede any government or company policy regarding the loading, transport or lifting of MEC machinery.

Truck drivers are responsible for loading and securing machines, and should be properly trained and authorized to operate MEC machinery. Drivers are also responsible for selecting the correct and appropriate trailer according to government regulations and company policy. Drivers must ensure that the vehicle and chains are strong enough to hold the weight of the machine (see the serial number plate for machine weight).

While loading and unloading, the transport vehicle must be parked on a level surface and secured to prevent rolling.

Loading: Free-wheel configuration for Winching or Towing

DANGER

RUNAWAY HAZARD!

After releasing the brakes there is nothing to stop machine travel. Machine will roll freely on slopes.

ALWAYS chock the wheels before manually releasing the brakes.

The machine can be winched or towed short distances at speeds not to exceed 3.1 mph (5.0 km/h).

Before towing or winching the machine, it is necessary to release the brakes. Reset the brakes after towing or winching.

Brake Release Operation

1. Chock the wheels to prevent the machine from rolling.
2. Pull out both the upper platform and lower control red Emergency Stop button to the On position.
3. Turn the key switch to the “Ground” position while pressing and holding down the yellow “Menu Enter Button” button on the ECU panel to enter the password input screen.
4. Press the yellow “Menu Enter Button” 4 times to enter the Menu screen.
5. Press the yellow “Menu Down Button” button to select “Special Mode”.
6. Press the yellow “Menu Enter Button” button to enter Special mode and the screen will display “Brake Release”.
7. Press the yellow “Menu Enter Button” button to display “Long press enter to release brakes”. Press and hold down the yellow “Menu Enter Button” button to show on the lower control display “Brake is released!” The horn will sound signaling that all brakes have been released. The upper control display will show “Brake Release Mode”.
8. If you want to reset the brakes, turn the key switch to the Off position or push in the red Emergency Stop button.

Driving or Winching onto or off of a Transport Vehicle

WARNING

Always attach the machine to a winch when loading or unloading from a truck or trailer by driving.

Read and understand all safety, control, and operating information found on the machine and in this manual before operating the machine.

Before loading or unloading the machine, check that:
- The deck extension, controls and component trays are secure.
- The platform is fully lowered.
- All loose items have been removed.

Before driving or winching the machine:
- Attach the machine to a winch.
- Remove all machine tie downs. Remove wheel chocks.

Driving
- Turn the Base Key Switch to Platform. Check that the Emergency Stop button is reset by pulling the button out to the On position (pulled out).
- Enter the platform and reset the Platform Emergency Stop Switch.
- Test platform control functions.
- Select slow drive speed mode. Carefully drive the machine off the transport vehicle with the winch attached.

Note: The brakes are automatically released for driving and will automatically apply when the machine stops.

Winching
- Disengage brakes (see page 44).
- Carefully operate the winch to lower the machine down the ramp.
- Chock the wheels and engage the brakes.

Lifting the machine with a Forklift
- Position the forklift forks in line with the forklift pockets. The forklift pockets are located on both sides of the ladder or on both sides of the machine chassis as shown.
- Drive forward to the full extent of the forks.
- Raise the machine 6 inches (15 centimeters) and then tilt the forks back slightly to keep the machine secure.
- Be sure the machine is level when lowering the forks.

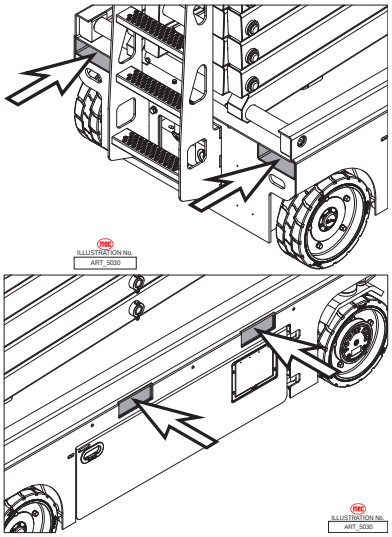

Securing to truck or trailer for Transport

- Turn the Key Switch to off and remove the key before transport.
- Inspect the entire machine for loose or unsecured items.
- Chock the wheels
- Use the tie-down points on the chassis for anchoring down to the transport surface.
- Use chains or straps of ample load capacity.
- Use a minimum of four (4) chains or straps.
- Adjust the rigging to prevent damage to the chains and the machine.

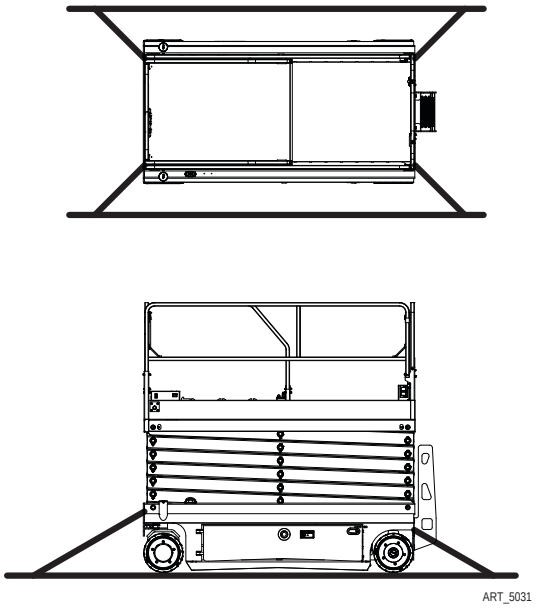

Lifting Instructions

Only qualified riggers should rig and lift the machine.

WARNING

Ensure that the crane, loading surfaces, spreader bars, cables, chains and straps are of sufficient capacity to withstand the machine weight. See the serial plate for the machine weight.

- Fully lower the platform. Be sure the deck extension is retracted and the controls and component trays are closed and secure. Remove all loose items from the machine.
- Attach rigging to the designated lift points only.
- Adjust the rigging to prevent damage to the machine and to keep the machine level.
- Determine the center of gravity of the machine.

Model	X Axis	Y Axis
1930+	25.0 inches (63.4 centimeters)	20.4 inches (51.9 centimeters)
2632+	31.7 inches (80.6 centimeters)	22.7 inches (57.6 centimeters)

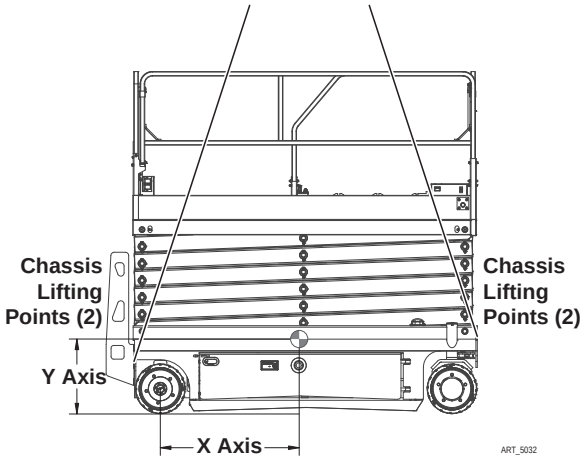

Notes

Notes

Notes

MEC Parts Order Form

Phone: 559-842-1523
Fax: 559-400-6723
Email: Parts@mecawp.com

Please Fill Out Completely:

Date: _____ **Ordered By:** _____
Account: _____ **Your Fax No.:** _____
Bill to: _____ **Ship to:** _____

Purchase Order Number _____ **Ship VIA** _____

*** All orders MUST have a Purchase Order Number* *****Fed Ex shipments require Fed Ex account number*

Part Number	Description	Quantity	Price

All back-ordered parts will be shipped when available via the same ship method as original order unless noted below:

_____ Ship complete order only - No Backorders
_____ Ship all available parts and contact customer on disposition of back-ordered parts
_____ Other (Please specify)

Signature _____

Limited Owner Warranty

MEC Aerial Platform Sales Corp. warrants its equipment to the original purchaser against defects in material and/or workmanship under normal use and service for one (1) year from date of registered sale or date the unit left the factory if not registered. MEC Aerial Platform Sales Corp. further warrants the structural weldments of the main frame and scissor arms to be free from defects in material or workmanship for five (5) years from date of registered sale or date unit left the factory if not registered. Excluded from such warranty is the battery(s) which carries a ninety (90) day warranty from described purchase date. Warranty claims within such warranty period shall be limited to repair or replacement, MEC Aerial Platform Sales Corp's option, of the defective part in question and labor to perform the necessary repair or replacement based on MEC Aerial Platform Sales Corp's then current flat rate, provided the defective part in question is shipped prepaid to MEC Aerial Platform Sales Corp. and is found upon inspection by MEC Aerial Platform Sales Corp. to be defective in material and/or workmanship. MEC Aerial Platform Sales Corp. shall not be liable for any consequential, incidental or contingent damages whatsoever. Use of other than factory authorized parts; misuse, improper maintenance, or modification of the equipment voids this warranty. The foregoing warranty is exclusive and in lieu of all other warranties, express or implied. All such other warranties, including implied warranties of merchantability and of fitness for a particular purpose, are hereby excluded. No Dealer, Sales Representative, or other person purporting to act on behalf of MEC Aerial Platform Sales Corp. is authorized to alter the terms of this warranty, or in any manner assume on behalf of MEC Aerial Platform Sales Corp. any liability or obligation which exceeds MEC Aerial Platform Sales Corp's obligations under this warranty.

MEC Aerial Work Platforms

1401 S. Madera Avenue, Kerman, CA 93630 USA
Toll Free: 1.877.MEC.LIFT or 1.877.632.5438
Phone: 1.559.710.2425
Fax: 1.559.710.2390
info@MECawp.com
www.MECawp.com