Operator's Manual

CD-9T

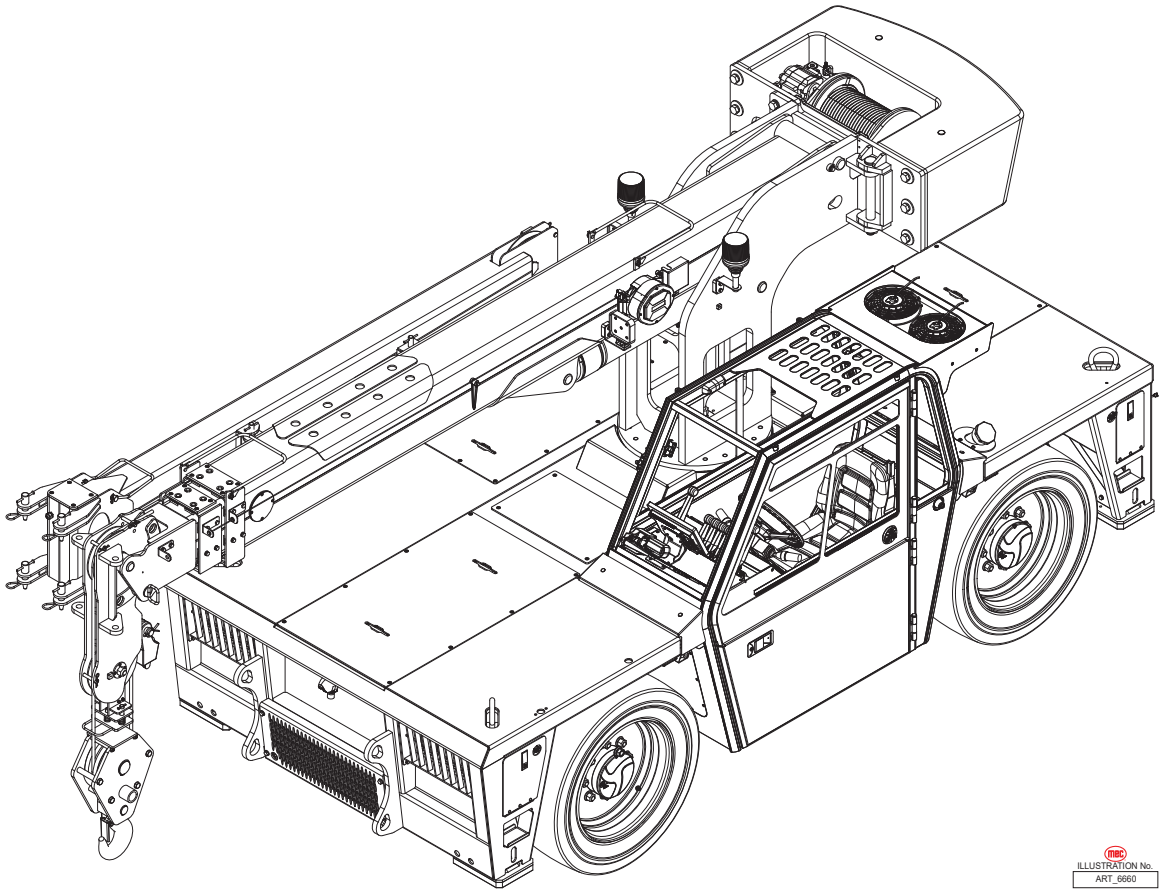

Meets requirements of ASME B30.5.

Serial Number Range 27200029 - Up

Part # 97326
October 2026

Revision History

Date	Reason for Update
August 2026	New Release

MEC Aerial Work Platforms

1401 S. Madera Avenue, Kerman, CA 93630 USA
Toll Free: 1.877.MEC.LIFT or 1.877.632.5438
Phone: 1.559.710.2425
Fax: 1.559.710.2390
info@MECawp.com
www.MECawp.com

Table of Contents

Section 1 - Introduction 1
Introduction 1

Section 2 - Safety 2
Safety 2
Safety Alert Symbols 3

Section 3 - Specifications 4
Specifications 4

Section 4 - Hazards 5
Electrocution Hazard 5
Tip-over Hazards 8
Collision Hazards 10
Additional Safety Hazards 11

Section 5 - Controls & Components 12
Component Locations 12
Controls, Overview 13
Controls, Crane and Outrigger. 15
Controls, Left Dash Controls 16
Controls, Right Dash Controls 18
Control Display Screens 19

Section 6 - Workplace Inspection 22
Workplace Inspection 22

Section 7 - Operating Instructions & Pre-Operation Function Tests 23
Operating Instructions & Pre-Operation Function Tests 23
Boom Extension Installation 28
Operator's Cabin Features 29
Perimeter Laser Lighting 32

Section 8 - Crane Safety Rules and Operation 33
Crane Condition 33
Rated Capacity Limiter (RCL) 36
Crane Capacity 37
Sheave Block and Downhaul Weight 41
Two-Part Line Reeving 42
Safety Devices. 43

Section 9 - Maintenance. 44
Maintenance 44
Inspection Tests 46
Quality Inspection 47
Pre-Delivery Inspection and Test Report 48
Inspection and Test Report 49
Lubrication 50

Section 10 - Troubleshooting 51
Troubleshooting 51

Section 11 - Decals 52
Decals 52
Serial Plate 55

Section 12 - Transport and Lifting Instructions 56
Transport and Lifting Instructions 56

Introduction

This Operator's Manual has been designed to provide you, the owner, user or operator, with the instructions and operating procedures essential to properly and safely operate your MEC Carry Deck Crane for lifting and transporting heavy loads in work locations.

This Operator's Manual and other manuals provided by MEC on the machine must be read and understood prior to operating your MEC Carry Deck Crane. The operator should not accept operating responsibility until he/she has read and understands the operator's manual as well as being trained and certified to operate the MEC Carry Deck Crane.

DANGER

It is essential that the operator of the carry deck crane is not alone at the workplace during operation.

Modifications of this machine from the original design and specifications without written permission from MEC are strictly forbidden. A modification may compromise the safety of the machine, subjecting the operator and personnel around the machine to serious injury or death.

Your MEC Carry Deck Crane has been designed, built, and tested to provide safe, dependable service. Only authorized, trained and certified personnel shall be allowed to operate or service the machine.

MEC, as manufacturer, has no direct control over machine application and operation. Proper safety practices are the responsibility of the owner, user and operator.

If there is a question on application and/or operation contact:

MEC Aerial Work Platforms

1401 S. Madera Avenue, Kerman, CA 93630 USA
Toll Free: 1.877.MEC.LIFT or 1.877.632.5438
Phone: 1.559.710.2425
Fax: 1.559.710.2390
info@MECawp.com
www.MECawp.com

Safety

DO NOT operate this machine unless you are a trained and certified crane operator and until you have read and understood this manual, have performed the Workplace Inspection, Pre-Start Inspection and Routine Maintenance, and have completed all the test operations detailed in the Operating Instructions section.

Failure to read, understand and follow all safety rules, warnings, and instructions could result in serious injury or death. For your safety and the safety of those around you, you must operate your machine as instructed in this manual.

MEC designs carry deck crane to safely and reliably lift and transport heavy loads in work locations. The owner/user/operator of the machine should not accept responsibility for the operation of the machine unless properly trained and certified.

WARNING

This product can expose you to chemicals known to the State of California to cause cancer and birth defects or other reproductive harm. For more information go to www.p65warnings.ca.gov.

Safety Alert Symbols

MEC manuals and decals use symbols, colors and signal words to help you recognize important safety, operation and maintenance information.

DANGER	**RED and the word DANGER – Indicates an imminently hazardous situation which, if not avoided, will result in death or serious injury.**
WARNING	**ORANGE and the word WARNING – Indicates a potentially hazardous situation which, if not avoided, could result in death or serious injury.**
CAUTION	**YELLOW with alert symbol and the word CAUTION – Indicates a potentially hazardous situation which, if not avoided, may result in minor or moderate injury.**
CAUTION	**YELLOW without alert symbol and the word CAUTION – Indicates a potentially hazardous situation which, if not avoided, may result in property damage.**
NOTICE	**GREEN and the word NOTICE – Indicates operation or maintenance information.**

Seat Belt

The Seat Belt helps to keep the operator safe and secure inside the cab. Always fasten the seat belt before operating the crane. Lap belt must be secured across the pelvis and should rest snug across the hips, not your stomach.

The seat belt and seat may become hot in the machine cabin if left exposed to the sun for a long period of time.

Specifications

Dimension Information		
Overall Length, Stowed	19 ft	5.79 m
Overall Width, Stowed	6.6 ft	2.01 m
Overall Height, Stowed	7ft 10in	2.39 m
Operational Information		
Maximum Rated Load	18,000 lbs	8,160 kg
Sheave Height	46.8 ft	14.2 m
Sheave Height without Jib	34.4 ft	10.5 m
Max Working Radius with Jib	40.6 ft	12.4 m
Max Working Radius without Jib	30.6 ft	9.3 m
Tail Swing	2.0 ft	0.58 m
Turntable Rotation	360° (Continuously)	
Max Main Boom Up Angle	70°	
Gradeability (Stowed)	40%	
Wheel Base	8.1 ft	2.475 m
Crane Weight[1]	21,500 lbs	9,750 kg
Ground Clearance	1.0 ft	0.28 m
Maximum Slope		
Maximum Slope, Descent	21.8° (40%)	
Maximum Slope, Ascent	21.8° (40%)	
Battery Information		
Power Source	One 12 Volt-DC Lead-Acid Battery, 1,100 cca	
Tire and Wheels Information		
Outer Diameter	36 in	914 mm
Width	11 in	278 mm
Engine Information		
Type	DEUTZ TD 2.9-L4 Diesel	
Engine Oil Capacity	2.4 gal	9.0 L
Engine Coolant Capacity	5.3 gal	20 L
Hydraulic Oil Capacity	31 gal	118 L
Diesel Fuel Capacity	20 gal	75 L
Drive Pump		
Type	Bi-Directional Variable Displacement Piston Pump	
Displacement	56cc	
Max Working Pressure	5,800 psi	400 bar
Drive Motor		
Type	Variable Displacement Piston Motor	
Displacement	107 cc	
Rated Working Pressure	5,800 psi	400 bar
Function Pump		
Type	Gear Pump	
Displacement	55/25 cc	
Rated Working Pressure	2,900 psi	200 bar
Meets requirements of ASME B30.5. Allowable ambient temperature range: -20°F to 120°F (-29°C to 49°C). Consult with MEC for operation outside of this range. 1 Weight may increase with certain options.		

Electrocution Hazard

ELECTROCUTION HAZARD! THIS MACHINE IS NOT INSULATED!

DEATH OR SERIOUS INJURY will result from contact with or inadequate clearance from any electrically charged conductor.

DANGER

You must maintain a CLEARANCE OF AT LEAST 10 FEET (3.05 meters) between any part of the machine, or its load, and any electrical line or apparatus carrying over 300 Volts up to 50,000 Volts. One foot (30.5 centimeters) additional clearance is required for every additional 30,000 Volts.

Observe Minimum Safe Approach Distance.

This machine is not electrically insulated and will not provide protection from contact with or proximity to electrical current!

Maintain safe distances from electrical power lines and apparatus in accordance with applicable government regulations and the following chart:

Voltage	Minimum Safe Approach Distance	
Phase to Phase	**Feet**	**Meters**
0 to 300 Volts	Avoid Contact	
Over 300V to 50kv	10 ft	3.1 m
Over 50KV to 200KV	15 ft	4.6 m
Over 200KV to 350KV	20 ft	6.1 m
Over 350KV to 500KV	25 ft	7.6 m
Over 500KV to 750KV	35 ft	10.7 m
Over 750KV to 1000KV	45 ft	13.7 m

Allow for hook or boom or load movement, electrical line sway or sag and beware of strong or gusty winds.

Keep away from the machine if it contacts energized power lines. Personnel must not touch or operate the machine until energized power lines are shut off.

Do not operate the machine during electrical thunderstorms or lightning. Do not use the machine as a ground for welding.

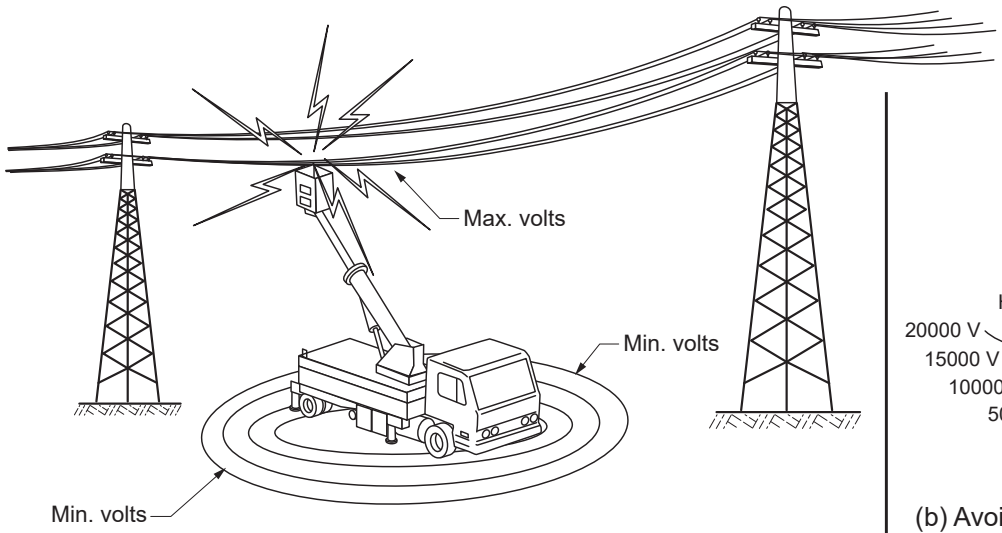

(a) Affected area

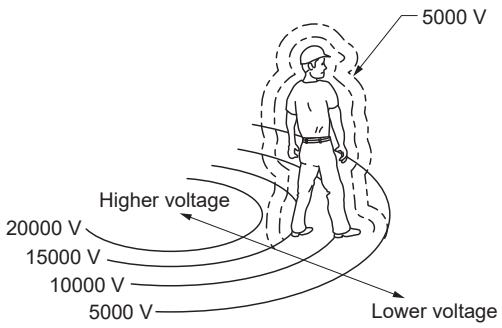

(b) Avoid simultaneous contact across areas of high potential difference

CLEARANCES FROM LIVE AERIAL CONDUCTORS

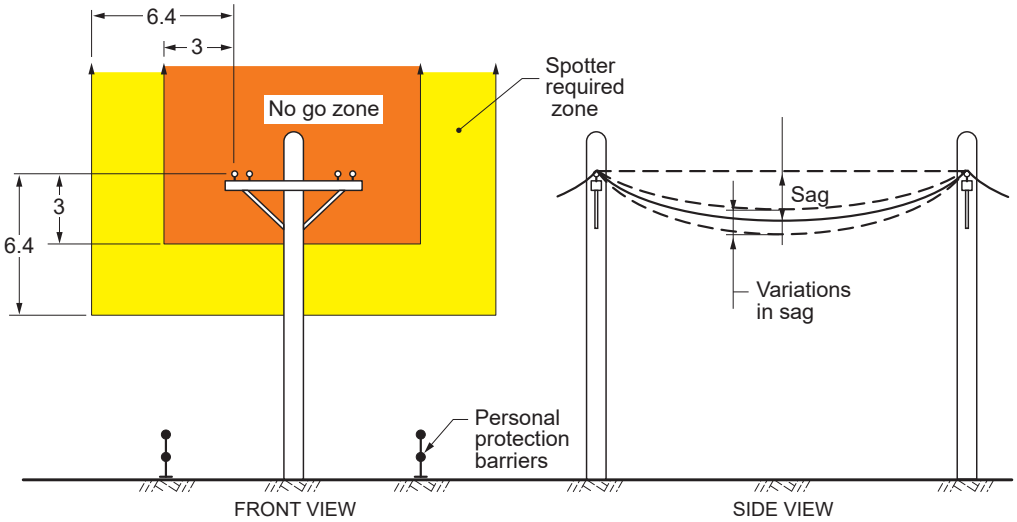

(a) Distribution lines up to and including 133 kV

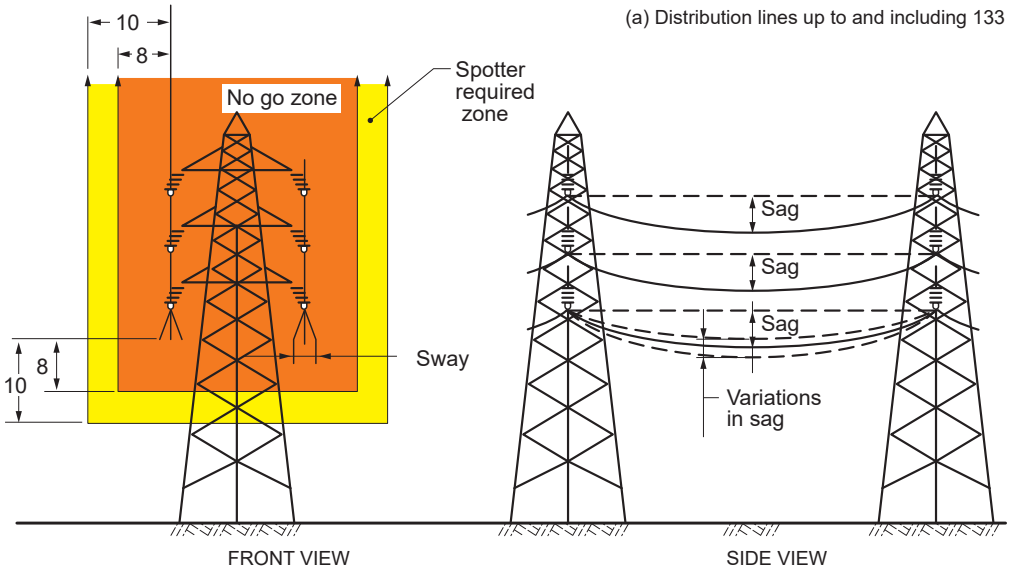

(b) Transmission lines greater than 133 kV

LEGEND

- = No shading, in the front views, indicates no proximity requirements
- = Light shading indicates spotter is required
- = Heavy shading indicates the NO GO ZONE

Continued on the next page.

ART_3265

When working in the area of energized conductors the user shall direct and the operator shall comply with the requirements to:

1) Stay at least 10 feet (3.05 meters) away from power lines with any part of their body, conductive object or any part of the carry deck crane.
2) If work requires working nearer than 10 feet (3.05 meters), stop and consult a qualified person with respect to electrical transmission and distribution to have appropriate measures taken (such as de-energizing and grounding).
3) If there is a question that the power lines may carry more than 50kV, consult a qualified person with respect to electrical transmission and distribution before proceeding.
4) If working or approaching closer than explained above, it shall only be done by a qualified person with respect to electrical transmission and distribution. Only qualified persons may work on electric circuit parts or equipment that has not been de-energized. Such persons shall be capable of working safely on energized circuits and shall be familiar with the proper use of special precautionary techniques, personal protective equipment, insulating and shielding materials and insulated tools.

Tip-over Hazards

DO NOT exceed the maximum rated load capacity. Under some conditions the standard capacity ratings can't be recommended and must be reduced accordingly to compensate for special hazards, such as weak supporting ground, wind, hazardous surroundings, operator inexperience, etc. The weight of the load should always be known.

DO NOT raise or extend the boom unless the crane is placed on a stable level surface. Make sure the ground is able to support the weight of the crane

DO NOT drive the machine on a slope that exceeds the maximum uphill, downhill or side slope rating. Slope rating applies to machines in the fully lowered and retracted position.

Use extreme care and reduce speed when driving with the boom retracted across uneven terrain, debris, unstable or slippery surfaces, and near holes or drop-offs.

DO NOT drive on or near uneven terrain, unstable surfaces, curbs, drop-offs or other hazardous conditions when the boom is raised and/or extended.

DO NOT allow the boom to come into contact with adjacent structures.

DO NOT use the controls to free the boom or hook or load that is caught, snagged or otherwise prevented from normal motion by an adjacent structure.

DO NOT raise the boom when wind speeds are in excess of 28mph (12.5m/s). If wind speeds exceed 28mph (12.5m/s) when the boom is elevated, carefully lower the boom and discontinue operation.

DO NOT increase the surface area of the load (i.e. cover the load with tarp or plywood). Increased surface area exposed to the wind will decrease machine stability.

NEVER transport loads unless they are firmly secured. Secure all tools and loads.

NEVER alter or disable any machine components.

NEVER replace any part of the machine with items of different weight or specification.

NEVER modify or alter the carry deck crane without written permission from MEC.

NEVER use the machine on a moving or mobile surface or vehicle.

Ensure that all tires are in good condition and lug nuts are properly torqued. The weight of the wheels is important for the stability of the crane.

DO NOT operate the machine with any components open or exposed.

DO NOT alter or disable the limit switches or machine components that in any way affect safety and stability.

DO NOT replace items critical to machine stability with items of different weight or specification. DO NOT modify or alter this machine without prior written permission from the manufacturer.

Collision Hazards

Drive slowly if the work environment has any conditions such as uneven terrain, debris, unstable or slippery surfaces, and near holes or drop-offs, or personnel or other factors.

Ensure that the cabin door is properly closed and secured before operating the machine. Ensure that the seat belt is fastened.

ALWAYS check over, under and around the machine for personnel, structures and obstructions before activating any control function and continue to watch for hazards while operating the machine.

Take into consideration the position of the boom or the drift during the rotation of the slew-ring gear.

Check path before moving for equipment, personnel, and materials or other obstructions.

Check for overhead obstructions before moving.

DO NOT place the boom, the hook, or load against another structure(s).

Check path before moving with the boom elevated for hazards in the air.

Reduce travel speed when moving the machine on slopes, when near personnel and obstacles, or when surface conditions are wet, slippery or otherwise limiting.

DO NOT operate in the path of any crane unless the controls of the crane have been locked out and/or precautions have been taken to prevent any possible collision.

Stunt driving and horseplay are PROHIBITED.

Check for personnel and obstructions on the ground when lowering the boom.

Additional Safety Hazards

Explosion and Fire Hazards

- DO NOT operate the machine in hazardous locations or locations where potentially flammable or explosive gases or particles may be present.

Damaged Machine Hazards

- Conduct a thorough pre-start inspection of the machine and test all functions before each work shift to check for damage, malfunction and unauthorized modification. Tag and remove a damaged, malfunctioning or modified machine from service. DO NOT use a damaged, malfunctioning or modified machine.
- Routine maintenance must be performed by the operator before each work shift. Scheduled maintenance must be performed by a qualified service technician at scheduled intervals. Tag and remove from service any machine that has not had scheduled preventative maintenance performed.
- Check that all safety and instructional decals are in place and undamaged.
- Check that the operator's, safety and responsibilities manuals are present in the storage container located in the cabin. All manuals must be complete, undamaged and readable.

Bodily Injury Hazards

- DO NOT operate the machine when there is a hydraulic fluid or air leak. Hydraulic fluid or air under pressure can penetrate and burn skin, damage eyes, and may cause serious injury, blindness, and death. Repair leaks immediately. Fluid leaks under pressure may not always be visible. Check for pin hole leaks with a piece of cardboard, not your hand.
- All compartments must remain closed and secure during machine operation. Improper contact with components under any cover will cause serious injury. Only trained maintenance personnel should access compartments. The operator should only access a compartment when performing pre-operation inspection.

Battery Safety - Burn Hazards

- Batteries contain acid. Always wear protective clothing and eye wear when working with batteries. Avoid spilling or contacting battery acid. Neutralize battery acid spills with baking soda and water.

Battery Safety - Explosion Hazard

- Keep sparks, flame and lighted tobacco away from batteries. Batteries emit explosive gas.

Battery Safety - Electrocution Hazard

- Avoid contact with electrical terminals.

Component Locations

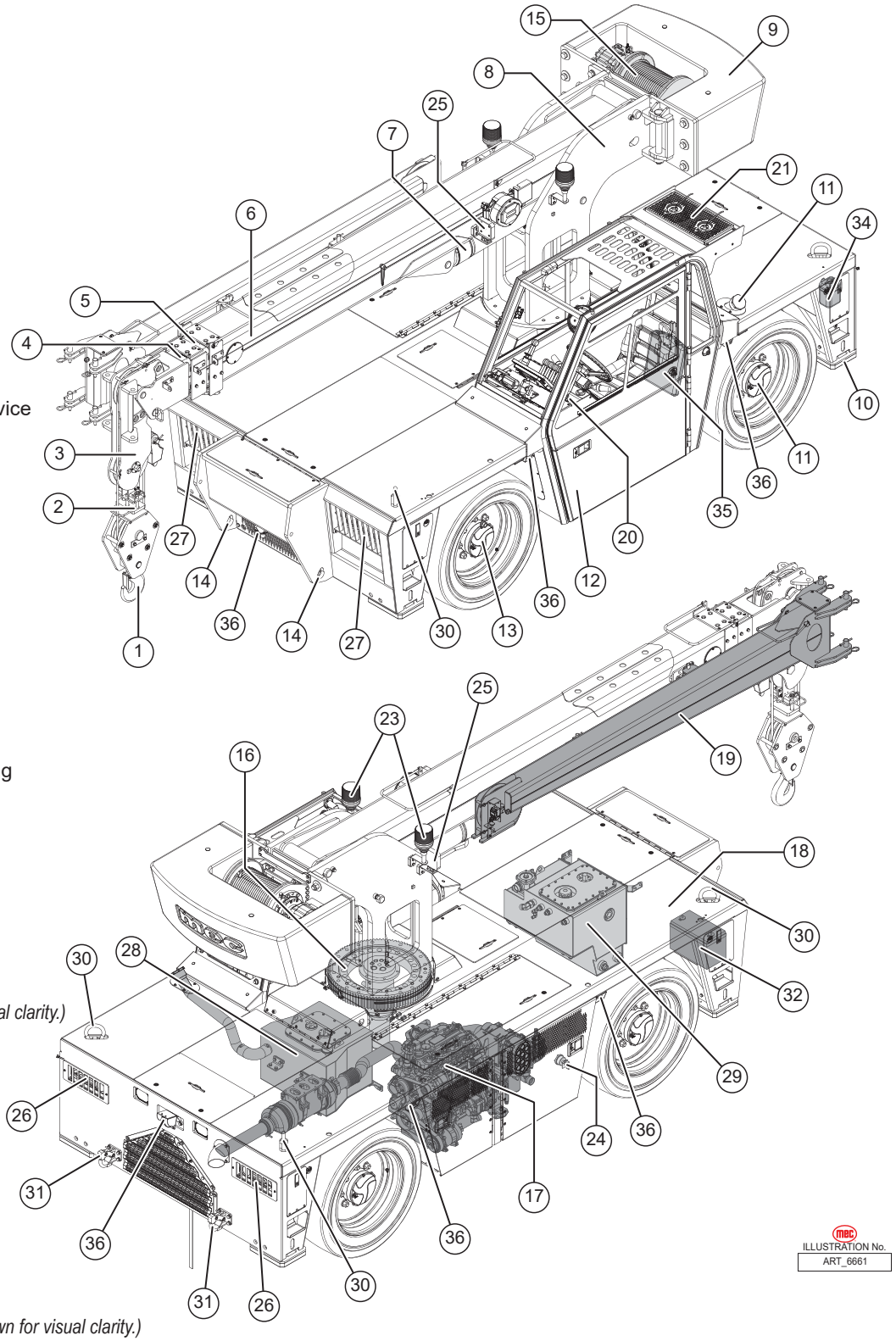

1. Main Hook Block
2. Anti-Two Block Device & Rated Capacity Limiter (RCL) Device
3. Pivoting Boom Head
4. 3rd Boom Section
5. 2nd Boom Section
6. 1st Boom Section
7. Lift Cylinder
8. Turntable
9. Counterweight
10. Outriggers (4)
11. Rear Axle
12. Operator's Cab *(Door can be fully closed or split open.)*
13. Front Drive Axle
14. Hook Tie-Down Point
15. Hoist
16. Swing Drive and Turntable Bearing *(Shown for visual clarity.)*
17. Engine Compartment *(Engine shown for visual clarity.)*
18. Carry Deck
19. Jib Boom Extension
20. Main Control Valve Location *(Inside Cabin.)*
21. Air Conditioning, Cabin
22. Main Power Switch *(Behind right engine door shown for visual clarity.)*
23. Flashing Hazard Beacons (2)
24. Main Power Switch, Lockable
25. Front Work Lights (2)
26. Rear Work Lights (2)
27. Headlights (2)
28. Fuel Tank, Diesel
29. Hydraulic Oil Tank
30. Tie-Down/Lifting Points (4)
31. Hitch Points (2)
32. 12-Volt Battery
33. Fuel Cap, Diesel
34. Windshield Wiper Fluid Tank
35. Manual Case *(Behind cabin seat shown for visual clarity.)*
36. Perimeter Safety Light (6)

Controls, Overview

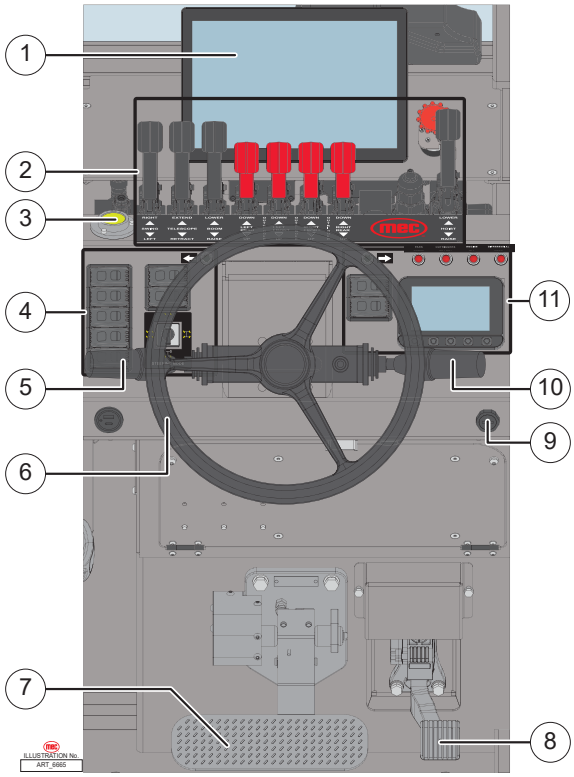

WARNING **ALWAYS check over, under and around the machine for personnel, structures and obstructions before activating any control function and continue to watch for hazards while operating the machine.**

Control		Description	
1	Panoramic Display Screen	This screen displays vehicle camera information and LMI information.	
2	Crane and Outrigger Controls	Please refer to page 15 for a more detailed view of the controls and their various functions.	
3	Level Indicator	This will show if the machine is level or not. This is used to show whether or not the machine is on level ground.	
4	Left Dash Controls	Please refer to page 16 for a more detailed view of the controls and their various functions.	
5	Windshield Wiper, Headlight and Turn Signal Lever	Windshield Wiper	To activate the washer jet, push in the rotating handle. To select the washer wipe speed, turn the lever to the position as follows: • 0: Select this position to turn the windshield wiper off. • I: Select this position to select the slow windshield wiper speed. • II: Select this position to select the fast windshield wiper speed. • J: Select this position to select the intermittent windshield wiper speed.
		Headlights	To activate the high beam, push the lever forward. To activate the low beam, push the lever backward.
		Horn Button	Press the button at the end of the lever sound the warning horn.
		Turn Signals	To signal a left turn, push the lever down until it click into place. The left-hand green light on the dashboard will turn green while the front and rear left turn signal lights will also flash. You can either disengage the turn signal by pushing the lever back into neutral position or by making a left turn. To signal a right turn, push the lever up until it click into place. The right-hand green light on the dashboard will turn green while the front and rear right turn signal lights will also flash. You can either disengage the turn signal by pushing the lever back into neutral position or by making a right turn.

6	Steering Wheel	**Make sure to center the tires before switching steering modes!** Used to turn the machine left or right. Depending on the currently selected Steering Mode, the tires may turn in a direction opposite of the rotation of the steering wheel. • Turn the steering wheel left to turn left. • Turn the steering wheel right to turn right.	
7	Brake Pedal	The pedal is spring-loaded to return to original position and used to slow and stop the crane travel movement. To slow or stop the crane travel movement, press down the pedal.	
8	Accelerator Pedal	The pedal is spring-loaded to return to idle speed and used to control travel speed and the hydraulic working speeds of the crane functions. To increase the engine speed, press down the pedal.	
9	Ignition Key Switch	The Ignition Key Switch has three positions: Off, Run, Start.	
		Off Position	In this position, the machine and engine is turned off. The ignition key can also be removed as well.
		Run Position	In this position, if the engine hasn't been started, then the machine systems will be energized, but the engine won't start.
		Start Position	In this position the engine will crank and start, and when the key switch is released it will move back to the Run position.
10	Transmission Gear Shift and Speed Lever	Transmission Gear Shift	This lever is used to shift the transmission between forward, neutral, and reverse. • Push Transmission Shift Lever up to shift transmission to forward (F) gear or top position. The machine will drive forward when the accelerator pedal is stepped on. • Push Transmission Shift Lever down to shift transmission to reverse (R) gear or bottom position. The machine will drive backwards when the accelerator pedal is stepped on. • The lever sits in the Neutral (center) position. Thus, operator must first lift up on lever before pushing it up or down.
		Speed Shift	Turn the knob at the end of the handle to select the speed of the machine when driving. • 1: Selecting this position for slow speed. • 2: Selecting this position for fast speed.
11	Right Dash Controls	Please refer to page 18 for a more detailed view of the controls and their various functions.	

Controls, Crane and Outrigger

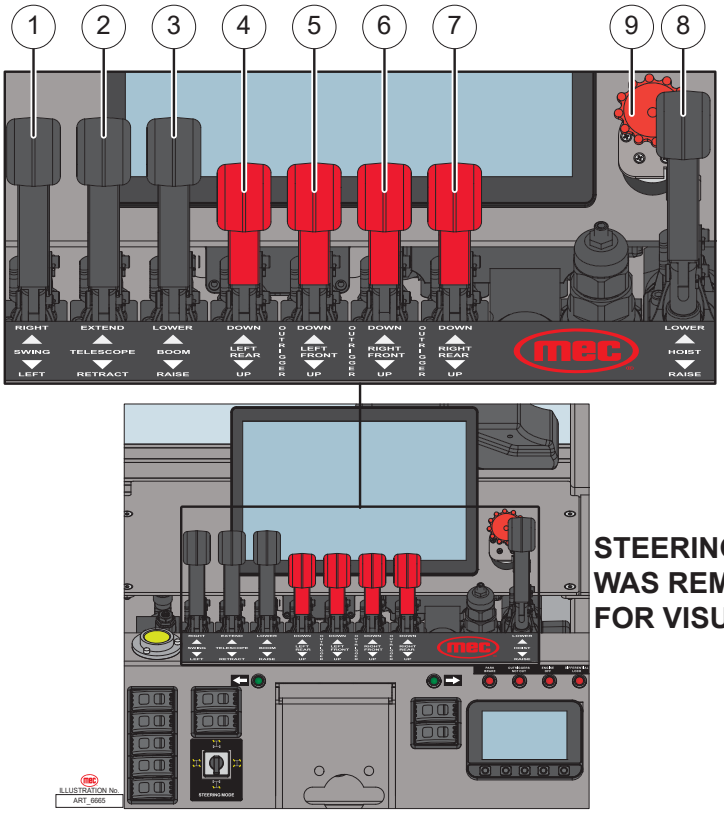

WARNING **ALWAYS check over, under and around the machine for personnel, structures and obstructions before activating any control function and continue to watch for hazards while operating the machine.**

WARNING **The operator must be aware of any personnel, equipment, structures, and obstructions that may be close to the machine before and during the outrigger deployment.**

	Control	Description
1	Turntable Swing Control Lever	Push the lever forward to rotate the turntable clockwise. Pull the lever backward to rotate the turntable counter-clockwise.
2	Telescopic Boom Extend/ Retract Lever	Push the lever forward to extend the main boom. Pull the lever backward to retract the main boom.
3	Boom Lift/ Lower Control Lever	Push the lever forward to lower the main boom. Pull the lever backward to raise the main boom.
4	Left Rear Outrigger Control Lever	Push the lever forward to extend the left rear outrigger. Pull the lever backward to retract the left rear outrigger.
5	Left Front Outrigger Control Lever	Push the lever forward to extend the left front outrigger. Pull the lever backward to retract the left front outrigger.
6	Right Front Outrigger Control Lever	Push the lever forward to extend the left front outrigger. Pull the lever backward to retract the left front outrigger.
7	Right Rear Outrigger Control Lever	Push the lever forward to extend the right rear outrigger. Pull the lever backward to retract the right rear outrigger.
8	Hoist Control Lever	Push the lever forward to lower the hook block. Pull the lever backward to raise the hook block.
9	Drum Rotation Indicator	Used to monitor the Drum Rotation when line of sight is not possible.

Controls, Left Dash Controls

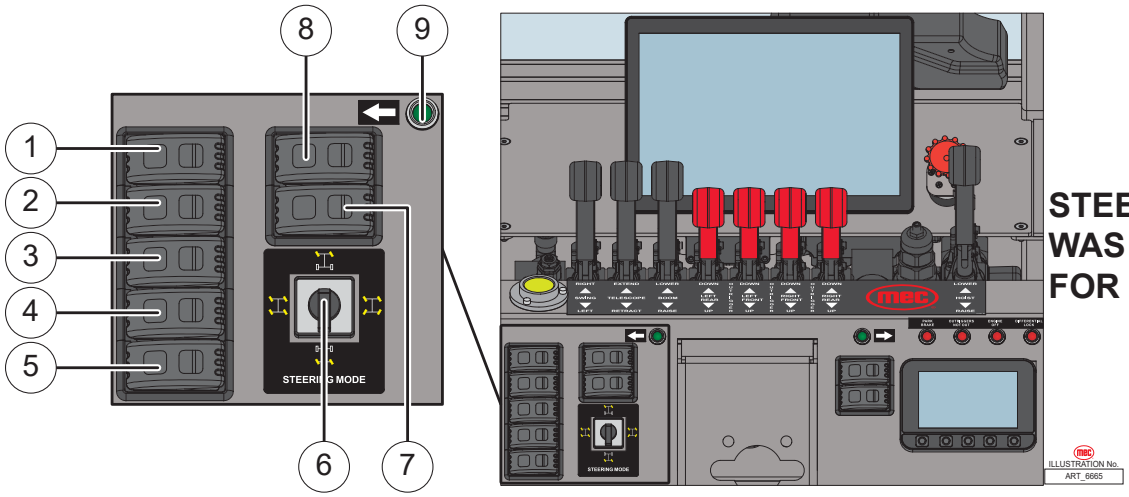

STEERING WHEEL WAS REMOVED FOR VISUAL CLARITY

WARNING **ALWAYS check over, under and around the machine for personnel, structures and obstructions before activating any control function and continue to watch for hazards while operating the machine.**

Control		Description
1	High Beam Switch	This switch is used to turn on the high beam. The button icon will faintly glow when active. • Left position: High beam on. • Right position: High beam off.
2	Strobe Light Switch	This switch is used to turn on the strobe lights, which are located on the turntable near the base of the main boom, to alert nearby personnel. The button icon will faintly glow when active. • Left position: Strobe lights turn on. • Right position: Strobe lights turn off.
3	Front Work Light Switch	This switch is used to turn on the front work lights. One work light is on the main boom, near the base and the other work light in located on the opposite side of the main boom on the turntable close to the base of the main boom. The button icon will faintly glow when active. • Left position: Front work lights turn on. • Right position: Front work lights turn off.
4	Rear Work Light Switch	This switch is used to turn on the rear work lights which are located on the rear of the machine. The button icon will faintly glow when active. • Left position: Front work light on. • Right position: Front work light off.
5	Hazard Warning Lights Switch	This switch is used to turn on the hazard warning lights. The headlights and rear work lights will flash yellow, and in the cabin the two green dashboard lights will also flash as well. The button icon will faintly glow when active. • Left position: Hazard warning lights turn on. • Right position: Hazard warning lights turn off.
6	Steering Mode Selector	Use this switch to set the steering mode: • Top Position (1): Front 2-Wheel Steer -- Only the front two wheels steer. • Right Position (2): 4-Wheel Steer -- The front and rear wheels steer in opposite directions. • Bottom Position (3): Rear 2-Wheel Steer -- Only the rear two wheels steer. • Left Position (4): Crab Steer -- All four wheels turn in the same direction.

7	Defogging Switch	It is used to defog the windshield. • Left position: Hot air is blown on the windshield to demist it. • Right position: Stops blowing hot air onto the windshield.
8	Differential Lock Switch	The differential lock increases the traction of the wheels on the rear axle. The Differential Lock red light as shown on page 18 will turn on when activated. • Left position: Disengages the differential block. • Right position: Engages the differential block.
9	Left Turn Signal Indicator	Before turning left, the left green turn signal light should be activated to alert all nearby personnel.

Controls, Right Dash Controls

STEERING WHEEL WAS REMOVED FOR VISUAL CLARITY

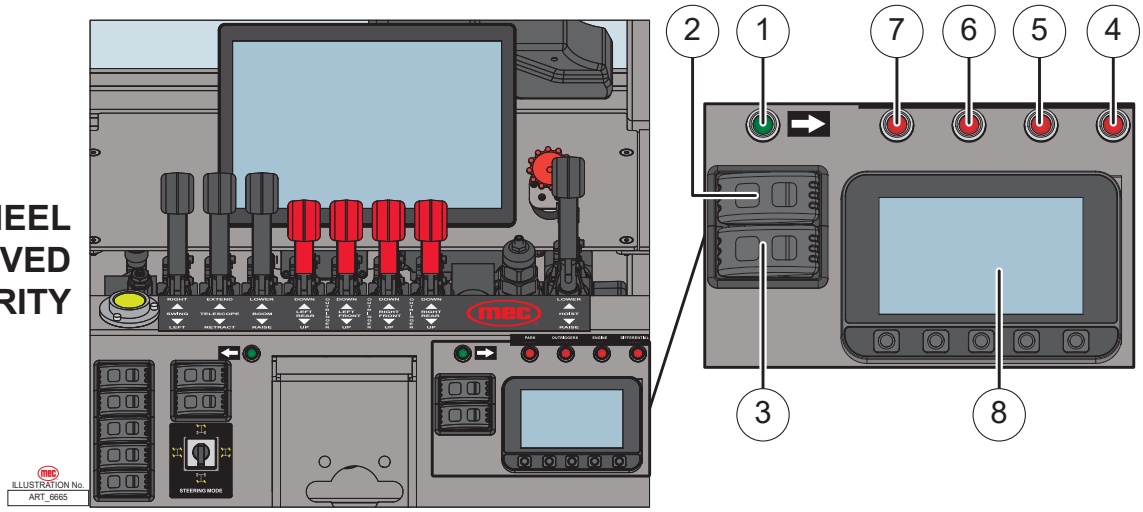

WARNING **ALWAYS check over, under and around the machine for personnel, structures and obstructions before activating any control function and continue to watch for hazards while operating the machine.**

Control		Description
1	Right Turn Signal Indicator	Before turning right, the right green turn signal light should be activated to alert all nearby personnel.
2	Parking Brake Switch	This switch is used to keep the carry deck parked in place. The light on the dashboard, and the icon on both screens will also indicate the current status of the parking brake as well when the machine is turned on. • Left position: Engages the parking brake and the red dashboard light will turn on. • Right position: Disengages the parking brake and the red dashboard light will turn off.
3	Idle Speed Selector	Use this switch to set the engine speed when machine functions are enabled. Setting this switch to low idle speed allows the operator to move the machine slowly and precisely. • Left position: Low idle speed and slow function speed. • Right position: High idle speed and fast function speed. Both screens will also display that High Idle is active.
4	Differential Lock Indicator	The red light turns on after the differential lock is engaged. The red light turns off after the differential lock is disengaged.
5	Engine Off Indicator	The red light turns on when the engine is on when the machine is energized but the engine hasn't been cranked. The red light turns off when the engine is off or the machine has cranked.
6	Outriggers Retracted Indicator	The indicator turns on when the outriggers are retracted. The indicator turns off when the outriggers are extended.
7	Parking Brake Indicator	The red light turns on after the parking brake is engaged. The red light turns off after the parking brake is disengaged.
8	Diagnostics Panel	This panel contains the basic information for monitoring the working of the truck. The pages and options available are displayed in the lower part of the screen and are controlled by the corresponding buttons present below.

Control Display Screens

Panoramic Display Screen

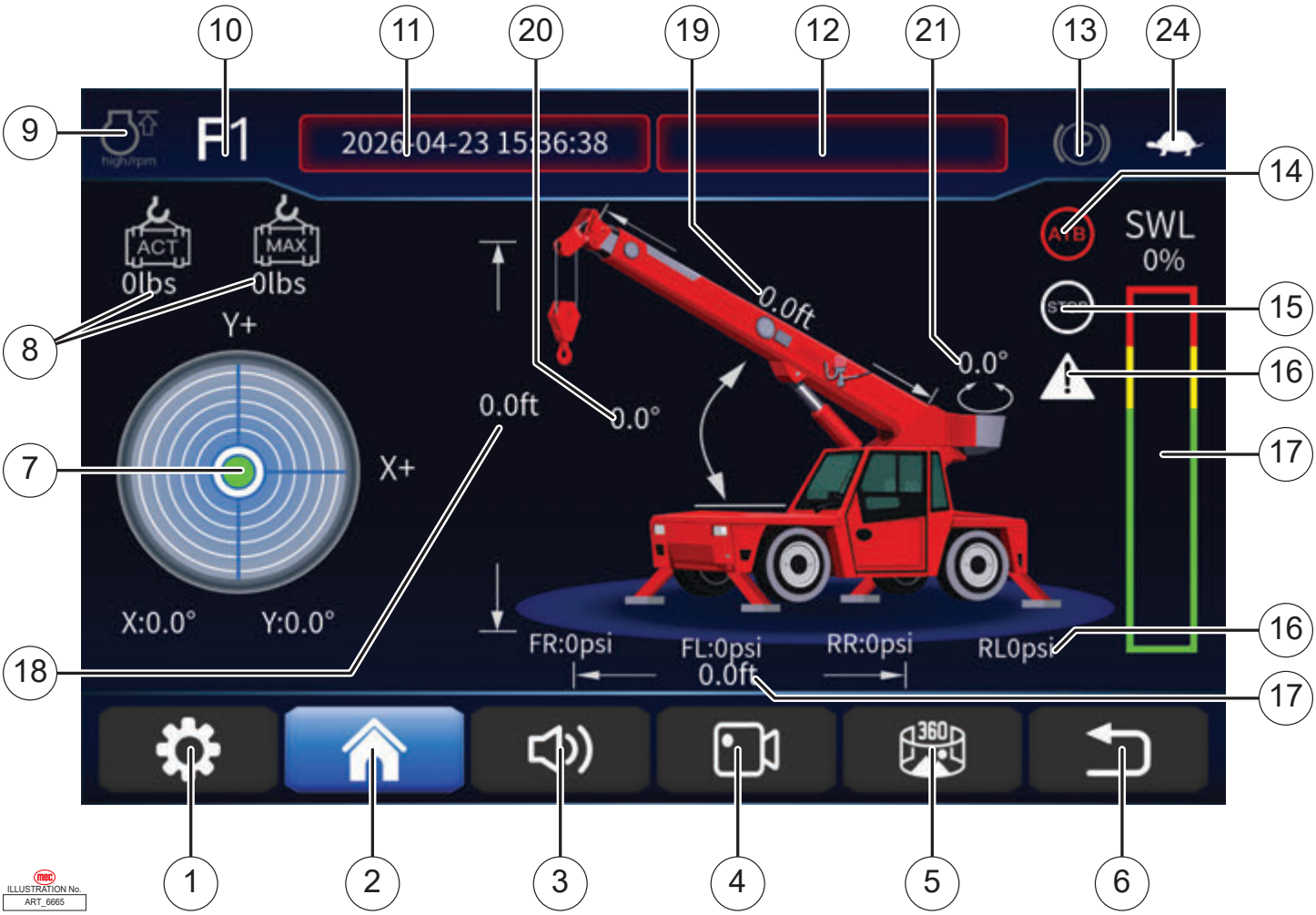

Buttons		Description
1	Settings	Tap on the button to enter the settings menu.
2	Home Screen.	Tap on the button to return to the home screen at any time.
3	Mute/Unmute	Tap on the button to mute or unmute cabin alerts from the Panoramic Display. When the speaker icon is white then any alarms will sound in the cabin. When the speaker icon is red with an X, then any alarms will not sound in the cabin. **This will not mute outside alarm from the machine!**
4	6-Channel Video	Tap on this button to enter the 6-channel video interface. You will have the option to select any one of the 6 camera to view from: Front, Front Right, Rear Right, Rear, Rear Left, Front Left. Press Exit to return back to the Home Screen.
5	360 View	Tap on this button to see a 360 degree view of the machine. The menu will split in two screen with the left screen showing an above view of the machine, and the right view will display the view from one of 6 camera: As with the 6-Channel Video menu, you select from: Front, Front Right, Rear Right, Rear, Rear Left, Front Left. Press Exit to return back to the Home Screen.
6	Back Button	Tap on this button to return to the previous menu.
7	Level Indicator	This will display the current inclination of the machine.
8	Weight Indicator	The left weight indicator will display the amount of weight being lifted while the right weight indicator shows the maximum weight that can be safely lifted up.

9	High RPM Indicator	When high RPM is disengaged, this icon will be gray to indicate that the machine is currently in low RPM. When high RPM is selected, this icon will turn white to indicate that high RPM has been selected.
10	Transmission Gear Indicator	This will show the currently select gear of the vehicle as either F (Forward), R (Reverse), or N (Neutral).
11	Calendar/Clock Display	This box will display the current date and clock.
12	Alert Display	This box will display any error codes that occur.
13	Parking Mode Indicator	When the Parking Brake Switch is engaged, this symbol will turn red to indicate that the Parking Brake is engaged.
14	Anti-Two Block Alert	When the anti-two block device becomes active, this icon will turn red. When the anti-two block device is not activated, this icon will turn white.
15	Overload Alarm	When the icon becomes red, the machine is overloaded. When the icon is white, the machine is not overloaded.
16	Overload Warning	When the triangle icon becomes yellow, the machine is close to being overloaded. When the triangle icon becomes white, the machine is not close to being overloaded.
17	Safe Working Load Indicator	The bar will fill up the more weight is being lifted going first partially filling up with green, yellow and then red. The green bar indicate a load that the machine can lift with no issues. The yellow bar indicates that the machine is close to reaching it's maximum weight capacity. The red bar indicates that the machine has exceed the maximum weight it can safely lift. Please carefully and slowly lower the hoist and remove the excess weight to safely resume normal machine operation.
18	Working Height	This will display the current working height.
19	Boom Length	This will display the current boom length.
20	Boom Angle	This will display the current boom angle.
21	Turntable Angle	This will display the current turntable angle.
22	Outrigger Status/ Pressure Indicator	This will display both the current status and pressure of the outrigger(s) which are identified as: FR (Front Right), FL (Front Left), RR (Rear Right), RL (Rear Left). When an outrigger is making full contact with the surface, under the appropriate outrigger will appear white slanted rectangles indicating that full contact had been made with the surface. The outrigger(s) pressure will also updated to reflect the current pressure of the outrigger.
23	Working Radius	This will display the current working radius of the machine.
24	Speed Mode	This will indicate the currently selected speed of the machine when driving. In Speed I or slow speed, a turtle icon will appear. In Speed II or fast speed, a rabbit icon will appear.

Diagnostic Panel

This panel contains the basic information for monitoring operation of the machine.

Row "A" displays the pages and options available in the lower part of the screen and is controlled by the corresponding buttons on row "B".

The left band shows:
- Engine speed 0-4000RPM
- Steering mode selection indicator light
- Hazard beacons active indicator light
- Engine Alarm indicator light
- Parking brake active indicator light

The center band shows:
- Drive speed 0-30mph
- Transmission Gear selection indicator light
- Battery voltage

- Fuel level

The right band shows:

- Differential lock active indicator light
- Low engine oil level indicator light
- Engine glow plugs preheating indicator light
- Cooling fan active indicator light
- Engine slow/fast speed indicator light
- Battery power indicator
- Oil pressure
- Coolant temperature

The bottom band shows the information shown on the pages that can be accessed:

- Engine data (RPM, drive torque percentage measured, coolant temperature, oil pressure, fuel consumption, operating hours, quantity of fuel used)
- Gearbox data (port pressure, valve pressure, motor temperature, motor speed);
- LMI data (Anti-Two Block Alert, Overload Alarm, Overload Warning, Weight Indicator, Safe Working Load bar indicator, Working Height, Boom Length, Boom Angle, Turntable Angle)

The setting interface could be entered by pressing the setting button and holding for one second. The optional function can be turned on or off without a password, after entering the setting interface. The procedures are as follows:

1. Pressing "↑ / ✚" or "↓ / ▬" is used to choose the item separately. The chosen item would be shown in yellow background.
2. Pressing "On/Off" and holding on is used to turn on or off the corresponding function.
3. It returns back to main interface, when the button "Esc" is pressed.

Workplace Inspection

DO NOT operate this machine until you have read and understood this manual, have performed the Workplace Inspection, Pre-Start Inspection and Routine Maintenance, and have completed all the test operations detailed in the Operating Instructions section.

Inspect the workplace and determine whether the workplace is suitable for safe machine operation. Do this before moving the machine to the workplace.

Be sure the carry deck crane is the correct machine for the job.

Be aware of workplace conditions, and continue to watch for hazards while operating the machine.

ELECTROCUTION HAZARD! THIS MACHINE IS NOT INSULATED!

DEATH OR SERIOUS INJURY will result from contact with or inadequate clearance from any electrically charged conductor.

DANGER

You must maintain a CLEARANCE OF AT LEAST 10 FEET (3.05 meters) between any part of the machine, or its load, and any electrical line or apparatus carrying over 300 Volts up to 50,000 Volts. One foot (30.5 centimeters) additional clearance is required for every additional 30,000 Volts.

Observe Minimum Safe Approach Distance.

Workplace Inspection

Before operating the machine, check the workplace for all possible hazards, including but not limited to:

- Drop-offs or holes, including those concealed by water, ice, mud, etc.
- Sloped, unstable or slippery surfaces
- Bumps, surface obstructions and debris
- Electrical conductors
- Overhead obstructions
- Other objects or equipment
- Hazardous locations and atmospheres
- Inadequate surface and support to withstand all load forces imposed by the machine
- Wind and weather conditions
- The presence of unauthorized personnel
- Other possible unsafe conditions

Operating Instructions & Pre-Operation Function Tests

DO NOT operate this machine until you have read and understood this manual, have performed the Workplace Inspection, Pre-Start Inspection and Routine Maintenance, and have completed all the test operations detailed in the Operating Instructions section.

This section provides instructions and tests for each function of machine operation. Follow all safety rules and instructions. The operator must conduct inspections and a Functions Test of the machine before each work shift to check that all machine systems are working properly.

Test the machine on a firm level surface with no debris, drop-offs, potholes, overhead obstructions or electrical conductors. Perform each step outlined in this section.

This machine shall only be operated by trained and authorized personnel. If multiple operators use this machine, all must be trained, qualified and authorized to use it. New operators must perform a Pre-Start Inspection and Functions Test prior to operating the machine.

Operators must comply with all employer and job site rules and governmental regulations regarding the use of personal protective equipment.

DO NOT use a machine that is malfunctioning. If any function does not perform as described, tag the machine and remove for repair by a qualified service technician. After repairs are completed, a Pre-Start Inspection and Functions Test must be performed before using the machine.

WARNING

ALWAYS check over, under and around the machine for personnel, structures and obstructions and electrical power lines before activating any control function and continue to watch for hazards while operating the machine.

Located inside the engine module behind the right door, check the Main Power Switch. The Main Power Switch can be turned and must be in the On position to allow machine operation. The Main Power Switch can also be locked with a padlock to prevent unauthorized use.

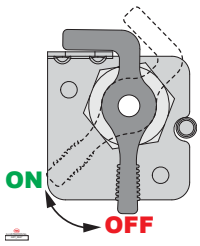

Functions Test

1. Select a test area that is firm, level and free of obstruction.
2. Turn the main power switch to the On position.
3. In the cabin, turn the ignition key right to crank the engine and release when the engine starts.

Test Crane and Outrigger Control Functions

You can refer to page 15 for a detailed layout about the specific functions of each individual control lever. The decal in front of the control levels also displays what function each lever controls.

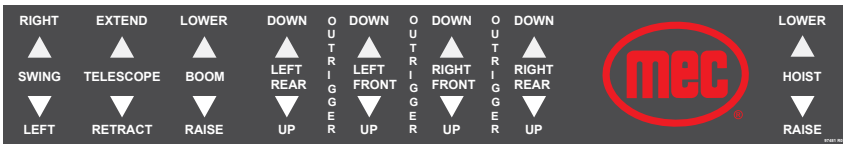

WARNING **The operator must be aware of any personnel, equipment, structures, and obstructions that may be close to the machine before and during the outrigger deployment.**

- Turntable Swing Control Lever
  - To rotate the turntable clockwise, push forward the lever.
  - To rotate the turntable counter-clockwise, push backward the lever.
- Telescopic Boom Extend/ Retract Lever
  - To extend the boom, push forward the lever.
  - To retract the boom, push backward the lever.
- Boom Lift/ Lower Control Lever
  - To lower the boom, push forward the lever.
  - To raise the boom, push backward the lever.
- Left Rear Outrigger Control Lever
  - To extend the left rear outrigger, push forward the lever.
  - To retract the left rear outrigger, push backward the lever.
- Left Front Outrigger Control Lever
  - To extend the left front outrigger, push forward the lever.
  - To retract the left front outrigger, push backward the lever.
- Right Front Outrigger Control Lever
  - To extend the right front outrigger, push forward the lever.
  - To retract the right front outrigger, push backward the lever.
- Right Rear Outrigger Control Lever
  - To extend the right rear outrigger, push forward the lever.
  - To retract the right rear outrigger, push backward the lever.
- Hoist Control Lever
  - To lower the hook block, push forward the lever.
  - To retract the hook block, push backward the lever.

Check the angle and length sensors

1. On the Diagnostics Panel, press the button under the “LMI” icon shown on the screen.
   - The display screen should display the tilt angel of the boom, and the extension length of the boom.
2. Fully extended the outriggers out.
3. Carefully raise the boom up while observing the display screen.
   - The boom should raise up, and the display screen should show the angle of the boom.
4. Fully lower the boom.

Check error page

1. Check the error page to see if there are any error message.
2. If there are any error message, then please fix them before proceeding.

Overload Function Test

1. Make sure that the boom is fully lowered and retracted.
2. Extend the boom fully out.

3. Connect a load of 3,300 lbs (1,500 kg) to the hoist.
4. Carefully raise up the boom.
   - The Panoramic Display Screen will display the load increasing as the boom raises until an alarm sounds. The Safe Working Load (SWL) bar will quickly filled with green, then yellow and finally red. The machine will alarm and the Panaromic Display will also ring if it isn't muted.
   - You should see the following Overload alerts:
     - At the top of the screen, in the red box will display "100% Overload".
     - Right above the electronic level indicator, you will see both the actual weight being lifted next to the maximum allowed weight limit in lbs.
     - The Safe Working Load (SWL) bar will be fully colored in 3 different colors: green, yellow, and red. Right under the words "SWL" will be the current load percentage in red.
     - To the left of the Safe Working Load (SWL) bar will be a circle with the words stop inside it. The circle stop will be red and triangle with an exclamation mark inside it will also be yellow.
     - The Load Moment Indicator (LMI) menu in the Diagnostic Menu will also display the same information as well.
5. Lower the boom and reduce the weight of the load to 1,100 lbs (500 kg).
6. Carefully raise up the boom.
   - The Panoramic Display Screen and the Load Moment Indicator (LMI) menu in the Diagnostic Menu will now both display the load of 1,100 lbs (500 kg) and the alarm will stop.

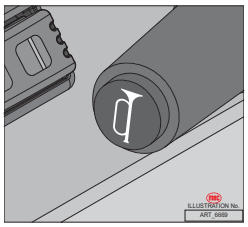

Testing the horn

1. Push in the button at the end of the windshield wiper handle.
   - The horn should sound.

Testing the anti-two-blocking device

1. Make sure the main boom is slowly, fully lowered and retracted.
2. Push up the anti-two-block to make physical contact with the boom.
3. Extend or raise the main boom.
   - **Result:** No functions should operate.

Testing the Steering Mode Selector

Four steering modes are available: Front 2-Wheel Steer, Crab Steer, 4-Wheel Steer, and Rear 2-Wheel Steer.

Note: Wheels do not automatically return to the centered position when switching steering modes! Always check the position of the wheels before switching steering modes!

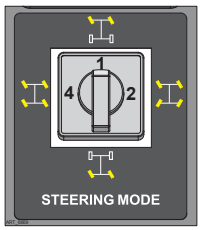

1. Operate the steering mode selector to select to (1) Front 2-Wheel Steer mode.
2. Turn left the steering wheel.
   - **Result:** The front wheels should turn left.
3. Turn right the steering wheel.
   - **Result:** The front wheels should turn right.

4. Operate the steering mode selector to select (4) Crab Steer mode.
5. Turn left the steering wheel.
   - **Result:** The front and rear wheels should turn left simultaneously and remain parallel.
6. Turn right the steering wheel.
   - **Result:** The front and rear wheels should turn right simultaneously and remain parallel.

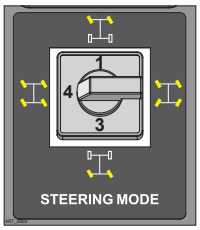

7. Operate the steering mode selector to select (2) 4-Wheel Steer mode.
8. Turn left the steering wheel.
   - **Result:** The front wheels should turn left, and the rear wheels should turn right.
9. Turn right the steering wheel.
   - **Result:** The front wheels should turn right and the rear wheels should turn left.

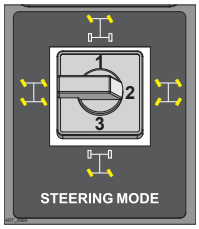

10. Operate the steering mode selector to select (3) Rear 2-Wheel Steer mode.
11. Turn left the steering wheel.
    - **Result:** The rear wheels should turn right.
12. Turn right the steering wheel.
    - **Result:** The rear wheels should turn left.

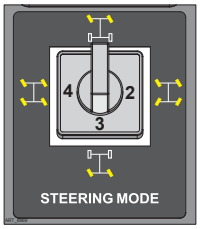

Testing the Speed Mode Selection, Driving, and Braking

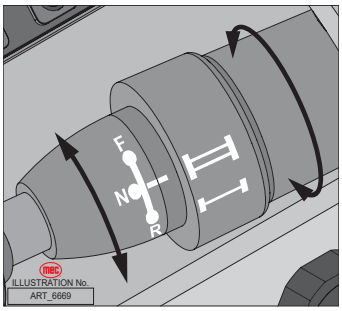

The main boom, hoist, and the turntable must be in the fully stowed position. Make sure to conduct the following test in a large open area clear of any obstacles, dangers or hazards.

1. Turn the knob at the end of the Transmission Gear Shift and Speed Lever to 1 to select slow speed, then push the lever upward to select the forward gear.
2. Slowly press down on the accelerator pedal.
   - **Result:** The crane should move forward, and the machine will accelerate faster the further down the accelerator pedal is pressed down with it reaching at around 3.7mph (6 km/h).
3. To slow down or stop the machine, step down on the brake pedal. The faster the brake pedal is pressed the quicker the machine will stop moving. Be aware that sudden braking may cause whiplash.
4. Turn the knob at the end of the Transmission Gear Shift and Speed Lever to 2 to select fast speed, then push the lever upward to select the forward gear.
5. Slowly press down on the accelerator pedal.
   - **Result:** The crane should move forward, and the machine will accelerate faster the further down the accelerator pedal is pressed down with it reaching at around 15mph (24 km/h).
6. To slow down or stop the machine, step down on the brake pedal. The faster the brake pedal is pressed the quicker the machine will stop moving. Be aware that sudden braking may cause whiplash.

Cabin Fan

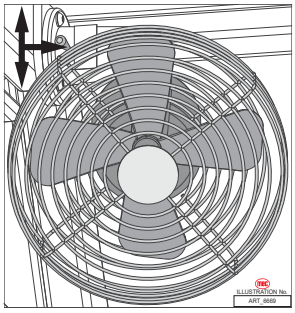

Located inside the cabin, near the front upper left-hand corner of the ceiling is a small cabin fan to help cool down the operator when working in a hot environment. The cabin fan has 3 different settings as indicated by the decal next to the switch.

The fan can be used in Run Mode, prior to starting the engine, or after the engine starts running.

- 2 - The fan is set to high speed.
- 0 - The fan is turned off.
- 1 - The fan is set to low speed.

Cabin Light

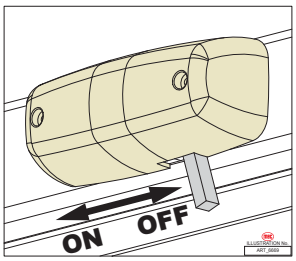

Located inside the cabin, near the front upper right-hand corner of the ceiling is a small cabin light to help lightly illuminate the cabin interior when there isn't sufficient light.

The cabin light has only two setting: on and off. The light can be turned on in Run Mode prior to starting the engine, or after the engine starts running.

- Flip the switch forward to turn on the cabin light.
- Flip the switch backwards to turn off the cabin light.

Cabin Safety Hammer

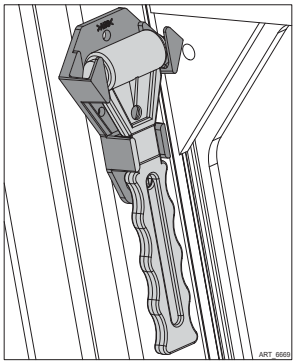

Located inside the cabin, behind the upper right-hand side of the operator is a safety-hammer. This is a handheld hammer with a hardened tip that can be used in case of an emergency to break the glass panels of the cabin to allow the operator to escape.

To prevent any glass fragments from entering the operator's eye(s) and/or mouth, the operator should turn their head away from the glass panel that they will strike while keeping both their eyes and mouth closed.

Emergency Bypass Switch

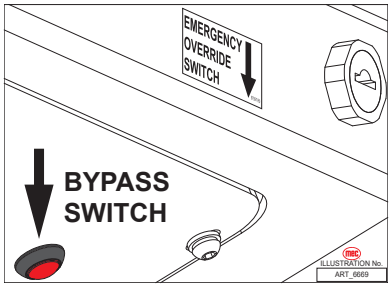

This switch is used to lower the boom or hoist in emergency situations! This red button is located in the cabin on the lower panel of the controls. On the dashboard, close to the ignition switch is a decal (# 97597) which has an arrow pointing down to indicate that the red Emergency Bypass Switch is located underneath.

Boom Extension Installation

WARNING

THIS PROCESS REQUIRES SPECIFIC SKILLS AND EXPERIENCE, APPROPRIATE LIFTING EQUIPMENT IF NEEDED, AND A PROPER WORKPLACE. DEATH, SERIOUS INJURY OR SIGNIFICANT MACHINE DAMAGE COULD OCCUR IF YOU ATTEMPT THIS PROCESS WITHOUT THE APPROPRIATE SKILLS AND EQUIPMENT.

1. Deploy the outriggers.
2. Raise and extend the boom 30 feet (9.1 m) above the ground. Extend out the load line until the hook is just above the ground.
3. Position the boom over the front of the machine then lower and retract the boom while leaving the load line on the ground.
4. If the sheave block is installed, then remove it.
5. Set the boom adjustable nose to “0 degrees.”
6. Remove the load line retention pin(s) from the adjustable boom nose.
7. If a downhaul weight, wedge socket and swivel hook are installed, unbolt the load line to capture the hoop on the main boom Anti-Two-Block system.

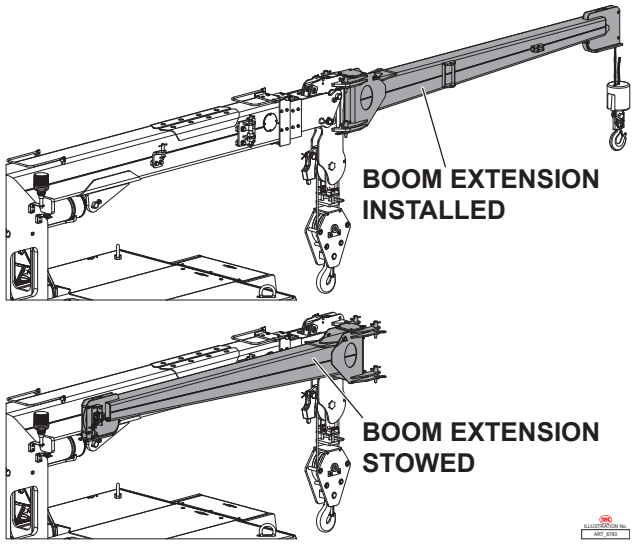

8. Remove the load line from the tip sheaves and lay it over the opposite side of stored boom extension.
9. Make sure the front stow pin is in place, and both sets of attach pins are removed from the lugs.
10. Remove the rear stow pin and swing the boom extension away from the rear end of the boom until the attaching inner lugs mesh on the near side of the boom.
11. Insert the attach pins in these inner lugs and retain them with the hairpin cotters.
12. Remove the front stow pin and swing the boom extension around to the front until the outer lugs mesh.
13. Insert the attach pins in their outer lugs and retain them with hairpin cotters. To insert the pin, it may be necessary to rock the boom extension.
14. Replace the rear stow pin and front stow pin in their brackets for storage and insert their hairpin cotters.
15. Remove the load line retention pin(s) from the boom extension sheave.
16. Lay the load line over the main boom and extension tip sheaves and insert the cable retainer pins and cotters.
17. Install the downhaul weight, wedge socket, and swivel hook on the load line if they are not already installed.
18. Disconnect the Anti-Two-Block wiring cable from the switch on the main boom tip and connect it to the cable connector on the boom extension base.
19. Check the Anti-Two-Block System for proper operation.
20. Store the Boom Extension in reverse order.
21. Lay the load line back in the boom tip sheaves and insert both retainer pins & cotters.
22. Replace all the pins in their lugs for storage and insert their hairpin cotters.
23. Make sure all load line retaining pins with hairpin cotters and load line capture hoop for the main boom anti-two-block are reinstalled correctly in their original positions.

Operator's Cabin Features

Seat Backrest Adjustment Lever

Located on the left-hand side of the seat, the Seat Backrest Adjustment Lever is used to adjust the angle of the seat back. The lever will always be in its lowest position when not being adjusted which indicates that the angle of the backseat is locked into place. When the lever is lifted up, the backseat will naturally swing forward.

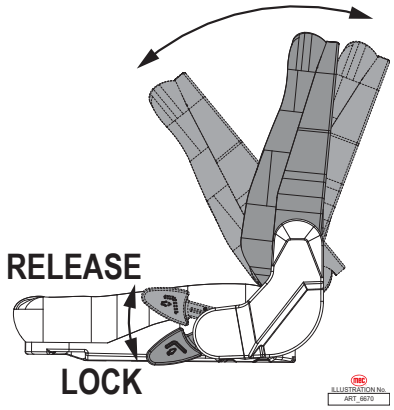

If the user wants to adjust the seat, then while the lever is lifted up the backseat will need to be moved back or forth into position. Once a position has determined release the lever and it will automatically lock itself in place by falling down into the lowest position. The user should make sure that the backseat clicks into place ensuring that it is firmly locked into place.

Seat Forward/Backward Adjustment Lever

Located on the right-hand side, directly under the seat is the Seat Adjustment Lever which is used to move the seat closer or further away from the steering wheel. The lever will always be in the locked position when not be adjusted.

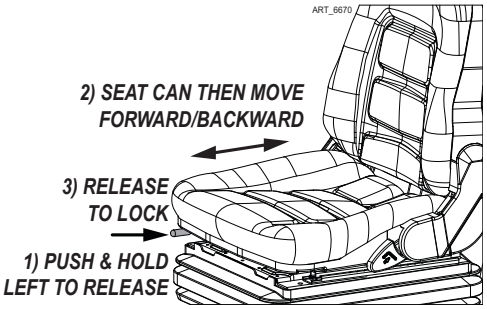

The seat can only adjust forward/backward when the lever is pushed left and held while adjusting the seat. The lever when released will automatically back right into the locked position. The seat is only considered locked into place when the seat can't be moved forward or back by user movement, and/or when the audible clicking of the seat locking into place occurs when adjusting the seat.

Cabin Seat

The seat in the cabin is where the operator sits and operates the machine. The seat has a seat belt equipped which is to be used at all times when operating the machine at any time. Make sure that the seat buckle and seat latch click when fastening the seat belt. If needed, make sure to adjust the tightness of the belt so that it is reasonably tight but comfortable. Push the red button to release the seat belt.

To adjust the height of the cabin seat, grab the seat and lift it upward. The seat can be raised into 2 positions from the lowest position, there will be an audible clicking sound when the seat has locked into place. To lower the seat to its lowest position, pull the seat all the way up and then release it where it will then lower to its lowest possible position.

The height of the seat can be either visually determined or seen by the seat bellow. If the seat bellow are fully retracted then the seat is at it lowest, one seat bellow expanded indicates the seat height is at its mid-point, but if both seat bellows are expanded then the seat is at its highest point,

Cooling/Heating Controls

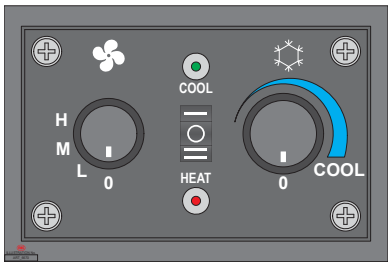

In addition to the cabin fan, the cabin is also equipped with Cooling/ Heating Controls. The image shown is from directly facing the controls, and as such when seated in the seat the operator may have to rotate the controls opposite from what is being stated to operate the heating or cooling of the cabin.

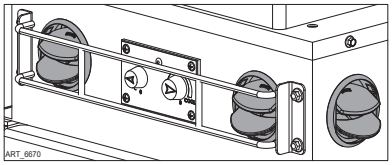

The seat has 4 vents at the base of the seat: 2 in front with one on either side of the Cooling/Heating controls, and one to the left and right side of the seat as well. These 4 vents can each have their angle and direction of the individual vents rotated, adjusted, or closed.

There are 4 different settings for the fan speed which are controlled by the left rotate knob.

- 0 is to turn the fan off.
- L is to set the fan to slow speed.
- M is to set the fan to medium speed.
- H is to set the fan to high speed.

In the center is a button to determine if the operator wants to either cool or heat the interior of the cabin. The button can be in 3 different positions. Pushing the button up will allow the cabin to be cooled. Pushing the button to the center or neutral position will do nothing. Pushing the button to the bottom will heat up the cabin.

The right rotate knob will determine the intensity of the air conditioning, with the further right the knob is turned the colder the air conditioning will become.

Seat Tension Handle

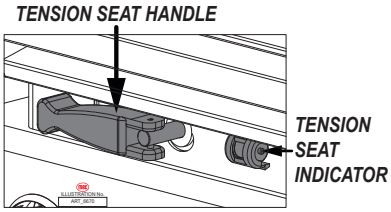

To adjust the tension of the seat, turn the Seat Tension Handle. The tension in the seat will determine whether or not the seat will give anything from no bounce to a lot of bounce if the machine is operating on uneven terrain. The operator's should set the tension so that it gives some bounce for comfortability when operating the machine on uneven terrain.

The dial indicator next to the handle will indicate the tension in the seat with the higher the number meaning that the seat will have a lot of tension and a low number will mean little to no tension in the seat.

Split Cabin Door

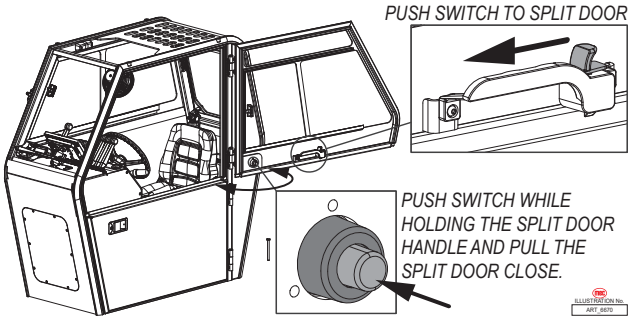

The cabin can either be fully closed for an enclosed cabin or split open with the top half held open in place by the locking mechanism. When the cabin door is split open, the lower half of the door will remain closed to help partially provide safety to the operator.

To split open the cabin door, press on the handle switch attached to the top half of the cabin door and

carefully swing it open until it clicks into place upon contact with the locking mechanism. To release the door, hold the split door handle and then push on the button release on the cabin door while pulling the split door handle. Make sure to fully close the top cabin half to ensure it locks into place.

Fire Extinguisher

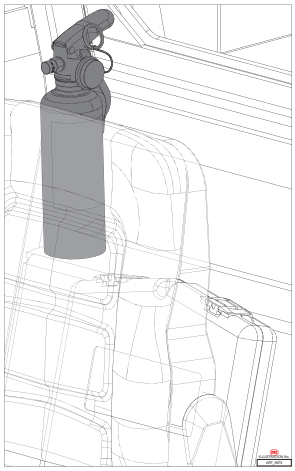

Located in the cabin behind the cabin seat, to the right of the operator when seated is a 2.5lb UL Rated: 10-B:C fire extinguisher. This single-use emergency fire extinguisher is rated to deal with automotive fires caused by both flammable liquids and electrical equipment.

The mounting bracket ensures that the fire extinguisher cylinder will not slide, roll, or move around inside the vehicle during vehicle operation when properly mounted.

Perimeter Laser Lighting

The MEC Carry Deck Crane is equipped with standard perimeter laser lighting which turns on when the machine is either energized but the engine hasn't started or when the engine has cranked. There are 6 safety laser lights: one at the front and rear of the machine, and two on the cabin and engine side.

The perimeter laser lighting projects a rectangular laser pattern onto the floor which marks a warning zone around the machine. The perimeter laser lighting creates a distinct thin, long line safety perimeter around the machine. The lighting is designed to increase alertness for both the operator and bystanders in work zones.

CAUTION **THE PERIMETER SAFETY LIGHT(S) ARE CLASS II LASERS. DO NOT LOOK DIRECTLY INTO THE BEAM(S) OR VIEW THEM WITH TELESCOPIC DEVICES!**

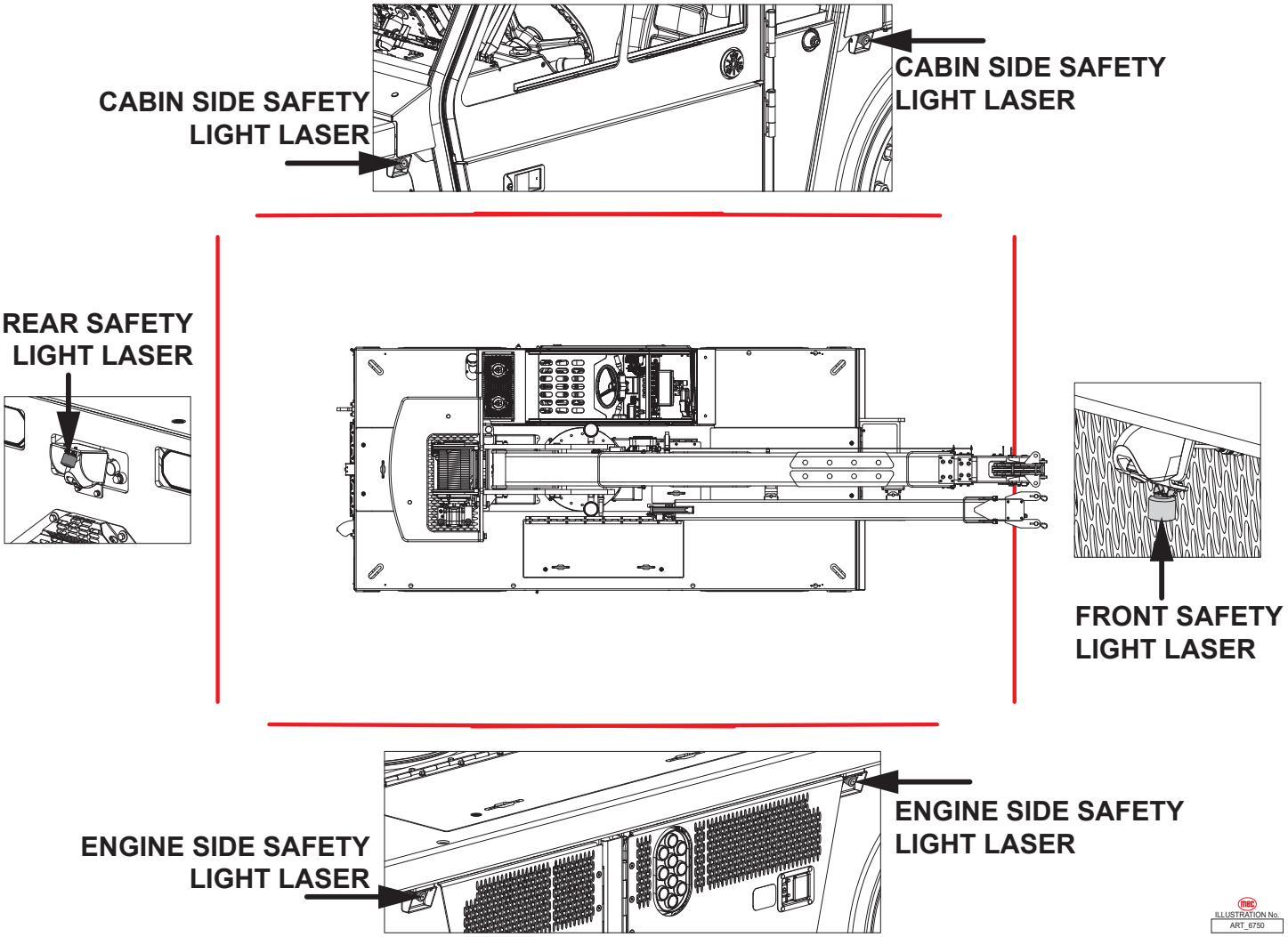

Crane Condition

1. Before beginning operation each day, thoroughly inspect the entire crane to be sure it is in good operating condition.
2. Inspect load hoist rope and wedge socket daily. We recommend rope inspection, replacement, and maintenance in accordance with ASME B30.5, Sec. 5-2.4.
3. Keep operator's compartment and decks free of mud and grease.
4. If crane is equipped with a cab, keep all window glass clean. Keep gauges clean.
5. Tools, lubricants, or rags on the crane should be kept in a secured toolbox.

WARNING

FALLING OBJECTS!

DO NOT USE ROPE CLIP ON LIVE SIDE OF THE LOAD HOIST ROPE! DEATH OR SERIOUS INJURY CAN RESULT FROM A SERIOUSLY WEAKENED ROPE CAUSED BY A ROPE CLIP!

WARNING

FALLING OBJECTS!

DO NOT USE CRANE WITHOUT CABLE RETAINER PIN(S) IN PLACE OVER CABLE SHEAVE! DEATH OR SERIOUS INJURY CAN RESULT WHEN DOWNHAUL WEIGHT AND HOOK ARE PULLED OVER END OF BOOM!

---

6. The Rated Capacity Limiter must be checked before each shift, and after each setup, for the proper operating configuration on the display. It must be inspected before each shift and tested with a known load at least once a month, as described in the RCL operation manual.

Lifting

1. Always refer to Crane Capacity Chart in operator's compartment before handling load. Do not exceed load ratings. Under some conditions, the standard capacity ratings cannot be recommended and must be adjusted downward. This compensates for special hazards, such as: weak supporting ground, wind, hazardous surroundings, operator inexperience, etc. The weight of the load should always be known.

WARNING

CRUSH HAZARD!

KEEP MACHINE STABLE AT ALL TIMES! OPERATOR COMPARTMENT WILL NOT PREVENT CRUSHING! DEATH OR SERIOUS INJURY CAN RESULT FROM MACHINE TIP OVER!

---

2. Be careful to prevent load swinging. A swinging load can cause instability or loss of control of the load. Be aware that the Anti-Two-Block System and the Rated Capacity Limiter can cause sudden stopping of boom movement, which can cause the load to swing. Swing the boom slowly whenever these systems might stop the boom.
3. Do not allow anyone to put any part of his body under a load. The load may lower or fall if there are damaged parts in the crane. Also, the load may drop a short distance due to thermal

contraction of the hydraulic oil in the cylinders.

WARNING

LOAD POSITION DRIFT! STAY CLEAR OF SUSPENDED LOAD! BE PREPARED FOR SUDDEN MOVEMENTS!

DEATH, SERIOUS INJURY, OR PROPERTY DAMAGE CAN RESULT FROM UNEXPECTED CHANGES IN LOAD POSITION DUE TO CHANGES IN HYDRAULICS, FRICTION, OR DRUM WRAP!

4. Do not use crane to drag loads sideways.

WARNING

STAND CLEAR OUTRIGGERS CAN CAUSE SERIOUS CRUSHING INJURY!

WARNING

FALLING HAZARD!

NEVER RIDE ON HOOK, LOAD, OR ANY DEVICE ATTACHED TO LOADLINE! RIDING ON CRANE LOADLINE CAN RESULT IN DEATH OR SERIOUS INJURY!

5. Level the crane before lifting. A small incline will significantly reduce the capacity. Use appropriate cribbing under the outriggers for leveling. All outriggers must be fully extended and tires must clear the ground to use the ON OUTRIGGERS ratings.
6. Always use outriggers if possible. If you must lift on rubber, keep the load as close to the ground as possible to prevent tipover. Move the load very slowly and use tag lines to prevent load swinging.
7. Crane may tip at less than rated loads if the surface is uncompacted, has wet dirt, bears soft soil with frozen crust, has thin or cracked pavement, or a surface near a hole or ledge. Always use adequate outrigger floats and/or cribbing.
8. The operator shall not leave the controls while the load is suspended.
9. Always use adequate parts of load hoist line for lifting heavy loads.
10. Always be sure the rope is properly seated and wound evenly on hoist drum.
11. Keep hands away from load hoist rope when hoist is being operated.
12. Be sure at least three wraps of rope are left on the hoist drum to ensure against rope pulling out of its anchor.
13. Never wrap the hoist rope around a load. Always use approved rigging.
14. Avoid pinch points such as: between a rotating turret and the cab, or in access holes of a telescoping boom, or between the two-block mechanism.

WARNING

PINCH POINTS!

KEEP HANDS OUT! DEATH OR SERIOUS INJURY CAN RESULT FROM MOVING PARTS!

WARNING

PINCH POINTS!

KEEP ALL PARTS OF THE BODY INSIDE OPERATOR COMPARTMENT! DEATH OR SERIOUS INJURY CAN RESULT FROM MOVING MACHINERY!

WARNING

ROTATING BOOM AND TURRET ASSEMBLY!

KEEP CLEAR! DEATH OR SERIOUS INJURY CAN RESULT FROM BEING TRAPPED!

Rated Capacity Limiter (RCL)

A Rated Capacity Limiter is installed on the crane to assist the operator in estimating loads and measuring load radii. Please read the RCL Operation Manual for complete instructions on operation of the system. Following, are some additional operating tips. Always be aware that the RCL can stop boom movement at capacity load conditions and in two-blocking conditions. Use good judgment in controlling the speed of boom movements to prevent shock loads and swinging loads.

If the RCL system stops the crane movement, there are various remedies that may be used to restart operation. If the hook is two-blocked, it should be lowered using the hoist control, if safe. The BOOM RAISE and TELESCOPE RETRACT may also be used if this is safer. In some unusual circumstances it may be necessary to swing the boom before lowering the load. If you are sure this will not cause an overload, you can turn the override key that is under the left instrument panel and swing the boom to a safer position.

If the load is the maximum for the loadline or attachment, the load should be set down in a safe place using the hoist lower control and the load or attachment changed. TELESCOPE RETRACT may also be used, and SWING may be used, if safe, as described in the preceding paragraph. **DO NOT USE THE BOOM RAISE CONTROL**, as this may increase the overload.

If the load is at the maximum allowable load radius, the boom can be raised or retracted to a safe radius or the load may be lowered to a safe place using the hoist control. If the boom extension is at its angle limit, the boom must be raised or the load hoisted down.

If the boom is fully lowered until it stops, (about 0°) the RCL will show an overload condition because the boom lift pressure sensors cannot read a useful pressure in this condition. To remedy this, raise the boom slightly. Or, if the boom is fully raised, (about 70°) the RCL may show an overload condition because the pressure in the boom lift cylinder is sensed to be an overload. To correct this condition, the override key may be turned and held, while the boom is lowered just slightly. Then check for other conditions before lowering further.

If there is a malfunction of the RCL or Anti-Two-Block system that causes loss of boom movement and cannot be remedied by the procedures above, the override key switch under the dashboard may be required to move the boom.

WARNING

We recommend the emergency override switch be used with discretion. Improper or careless use of this switch can cause damage to the crane and endanger people and property. The operator who uses the switch in an emergency should use good judgment.

There is a light on the dashboard to warn that one or more outriggers is not fully extended when using the ON OUTRIGGERS setup on the RCL. Check the light daily when the outriggers are down, and check to see that there is no load on the hook by raising and lowering each outrigger about three inches. The light should come on when an outrigger is up.

Crane Capacity

Before lifting loads, the operator must read the **Crane Capacity Chart** and adhere to the load capacities and radii of handling given. The information provided on this chart is based on stability, structural strength, and hydraulic capacity.

To operate the crane safely, the operator must know the weight of the load and handling devices and the radius of the lifting operation. The crane must not be loaded beyond the specifications of the capacity chart, except for test purposes as provided in ASME B30.5 Section 5-2.2. The person responsible for the lift must be sure that the load does not exceed the crane ratings at any radius at which the load may be during the entire lifting operation. The weights of the hooks, blocks, downhaul weights, slings, and other handling devices must be added with the load.

The **Rated Capacity Limiter (RCL)** on the crane is intended to assist the operator in estimating loads, measuring load radii, and to alert the operator to impending overload conditions. The use of the Rated Capacity Limiter does not replace the requirements of the preceding paragraph. Verified weights and measured radii must take precedence over the Rated Capacity Limiter readings. Please read the RCL Operation Manual.

The Rated Capacity Limiter displays a load, load radius, and boom angle that are obtained from electronic calculations using readings from pressure, length, and angle sensors. These readings cannot be exact and should be treated as estimates. In general, the smaller the load and the higher the boom angle, the larger the percent of error.

Be aware that the electronic and mechanical components cannot be 100% fail-safe. Do not consider the system as a substitute for good judgment, training, experience, or accepted safe operating practices. The operator is solely responsible for operation of the crane. Setting the Rated Capacity Limiter for the configuration of the crane is necessary before starting a lift. If incorrectly set, the system will not alert the operator to an impending overload, possibly resulting in the loss of life or destruction of property.

If the Rated Capacity Limiter is inoperative or malfunctioning, repair or recalibration of the unit must be done as soon as reasonably possible. The person responsible for lifts must establish procedures for determining load weights and radii, and conduct the lifts according to the second paragraph above.

The Rated Capacity Limiter is designed to stop crane functions that could cause an overload or two-blocking. These are: BOOM LOWER, TELESCOPE EXTEND, HOIST RAISE, SWING LEFT and SWING RIGHT. Great care must be exercised when handling a load near capacity or near a two-blocking condition. If the boom is being lowered or swung, the load will tend to swing if the Rated Capacity Limiter stops the boom movement. If the load is moving too fast, the sudden stopping by the system can cause dangerous load swinging, which can cause death or injury to personnel or property damage by impact with the load, or by the crane tipping.

NOTICE

Under certain load conditions, torsion induced in the chassis can cause it to twist. This may result in an opposite-side outrigger or tire lifting free from the supporting surface. This is most likely to occur when the boom is positioned over one corner of the machine. The condition does not indicate a loss of stability when working within the limits of the capacity chart. Provided the crane capacity has not been exceeded, operation may continue without restriction.

WARNING

The Rated Capacity Limiter can suddenly stop the boom lower and swing functions, causing the load to bounce or swing. Use great care when handling a load near capacity limits or near a two-blocking condition.

WARNING

SUDDEN STOPS POSSIBLE!

DO NOT EXCEED CAPACITIES OR RANGE LIMITS LISTED ON LOAD CHART! ALWAYS OPERATE SLOWLY WHEN NEAR CAPACITY LOADS!

RCL SYSTEM WILL STOP OPERATION WHEN SENSING OVERLOAD CONDITIONS! DEATH, SERIOUS INJURY OR PROPERTY DAMAGE CAN RESULT FROM SWINGING LOAD!

Crane Capacity Chart Definitions and Rules:

The load radius is the horizontal distance from the centerline of boom rotation (the center of the turntable when it is level), to the vertical load line with the load suspended. Because of deflections of the boom and carrier, the load radius increases when a load is hoisted from its resting place. The load radius may be measured with a measuring tape. If the desired load radius falls between two load radii on the chart, it is recommended to use the load radius with the lower capacity, and not try to interpolate between the numbers.

Load capacity ratings on this equipment are given on the basis that operations are to be conducted on firm and level terrain, and in a safe environment. These capacity ratings are reduced in proportion to the deviation from the prescribed conditions. Any unfavorable environmental condition, such as soft, sloping or uneven terrain, high wind, or hazardous surroundings constitutes a deviation.

The main boom capacities are given in direct relation to the radius at which the load is being handled. Boom extension capacities depend on the boom angle, as well as the load radius. The capacities shown on the capacity chart are the maximum allowable at the indicated radius. The greatest load that may be handled by the MEC CD-9T is 18,000 pounds (8,160 kg), but only at a 5 ft (1.5 m) radius, and on outriggers. All variances of loads and radii of handling are shown on the crane capacity chart. A chart is attached near the operator's seat, and there is also a chart in the operator's manual that is located inside the operator's manual compartment for the express purpose of informing the operator when a load can or cannot be safely handled.

The capacities shown in the 360° ROTATION columns of the capacity chart apply to the entire 360° rotation of the boom, and are maximum allowable at the indicated radius. The capacities OVER FRONT are limited as follows:

- On Outriggers: Boom rotation is limited to an arc of 15° either side of the crane centerline.

- On Rubber: Boom rotation is limited to the boom centered over front.

Note that the 360 DEGREE ROTATION capacities at some load radii are much less than the OVER FRONT capacities. The least stable position of the boom is over the side of the crane. Use great care when swinging a load from the front or rear of the crane toward the side of the crane. The load must be known in order to assure that the crane will not tip.

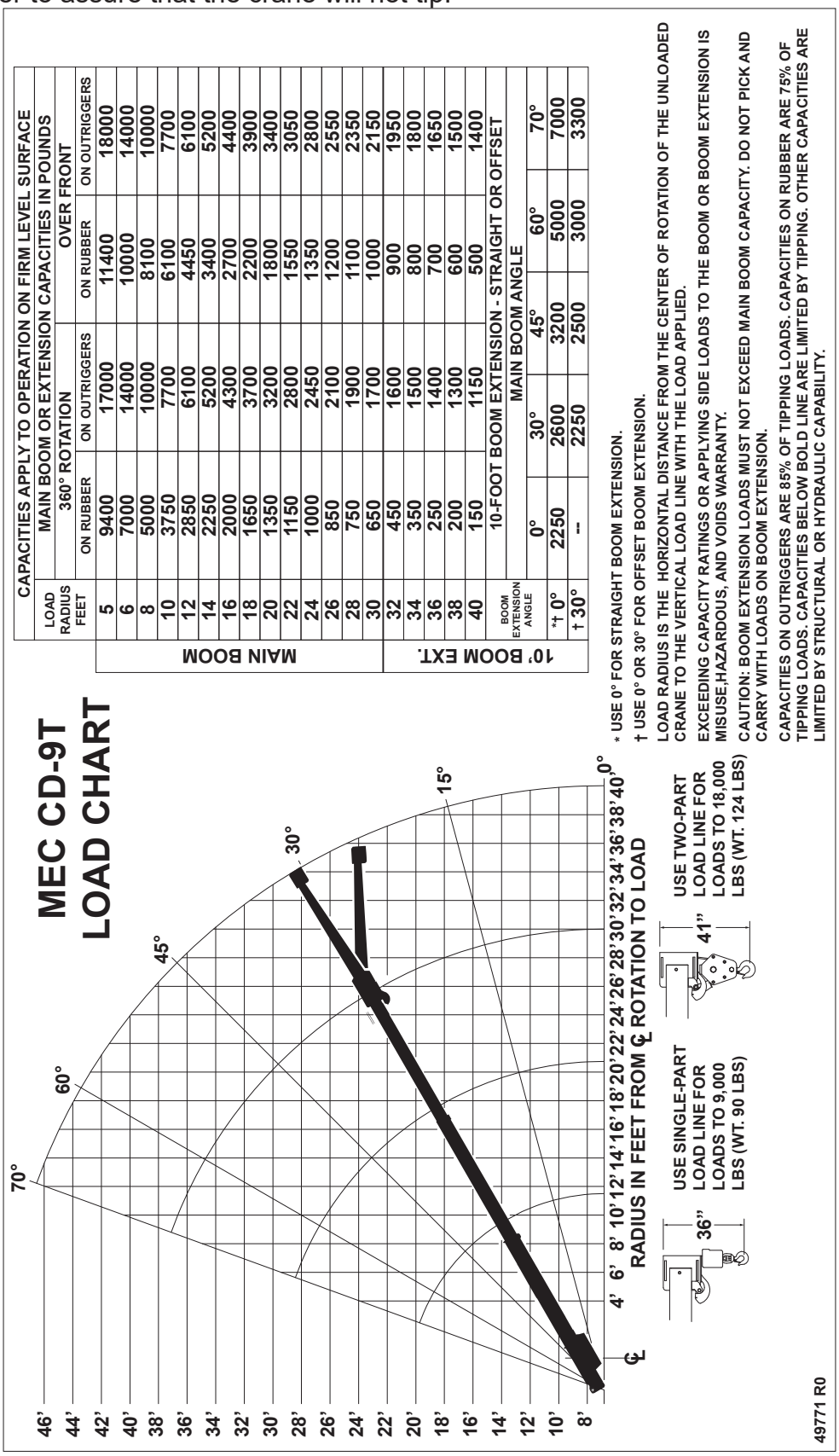

CAPACITIES APPLY TO OPERATION ON FIRM LEVEL SURFACE				
	MAIN BOOM OR EXTENSION CAPACITIES IN POUNDS			
	360° ROTATION		OVER FRONT	
LOAD RADIUS FEET	ON RUBBER	ON OUTRIGGERS	ON RUBBER	ON OUTRIGGERS
MAIN BOOM				
5	9400	17000	11400	18000
6	7000	14000	10000	14000
8	5000	10000	8100	10000
10	3750	7700	6100	7700
12	2850	6100	4450	6100
14	2250	5200	3400	5200
16	2000	4300	2700	4400
18	1650	3700	2200	3900
20	1350	3200	1800	3400
22	1150	2800	1550	3050
24	1000	2450	1350	2800
26	850	2100	1200	2550
28	750	1900	1100	2350
30	650	1700	1000	2150
10' BOOM EXT.				
32	450	1600	900	1950
34	350	1500	800	1800
36	250	1400	700	1650
38	200	1300	600	1500
40	150	1150	500	1400

10-FOOT BOOM EXTENSION - STRAIGHT OR OFFSET					
BOOM EXTENSION ANGLE	MAIN BOOM ANGLE				
	0°	30°	45°	60°	70°
*† 0°	2250	2600	3200	5000	7000
† 30°	--	2250	2500	3000	3300

* USE 0° FOR STRAIGHT BOOM EXTENSION.
† USE 0° OR 30° FOR OFFSET BOOM EXTENSION.

LOAD RADIUS IS THE HORIZONTAL DISTANCE FROM THE CENTER OF ROTATION OF THE UNLOADED CRANE TO THE VERTICAL LOAD LINE WITH THE LOAD APPLIED.

EXCEEDING CAPACITY RATINGS OR APPLYING SIDE LOADS TO THE BOOM OR BOOM EXTENSION IS MISUSE,HAZARDOUS, AND VOIDS WARRANTY.

CAUTION: BOOM EXTENSION LOADS MUST NOT EXCEED MAIN BOOM CAPACITY. DO NOT PICK AND CARRY WITH LOADS ON BOOM EXTENSION.

CAPACITIES ON OUTRIGGERS ARE 85% OF TIPPING LOADS. CAPACITIES ON RUBBER ARE 75% OF TIPPING LOADS. CAPACITIES BELOW BOLD LINE ARE LIMITED BY TIPPING. OTHER CAPACITIES ARE LIMITED BY STRUCTURAL OR HYDRAULIC CAPABILITY.

WARNING

A capacity load may be carried on the boom, or a capacity load may be carried on the deck, but not at the same time. The total of the percent of deck load and the percent of boom load must not exceed 100%. For example, if the boom load is 100% of its capacity at its current load radius, the deck load capacity is 0%. If the boom load is 60% of the load rating for its load radius, the deck load capacity is 40% of maximum.

WARNING

The capacities of this crane are based on all outriggers being FULLY EXTENDED to a FIRM, LEVEL surface. The crane may tip at less than capacity loads if operated in the following manner:

1) Outriggers only partially extended and resting on curbing, shoring, etc. If the outriggers are not all the way DOWN, they are not all the way OUT.
2) Outriggers extended to a surface that appears to be firm, but is unable to support the outrigger pad at full rated loads. Examples of this type surface are:
   1. Thin or cracked blacktop or concrete.
   2. Dirt that appears dry and firm on top, but is moist or unpacked beneath the surface.
   3. Dirt with a frozen, but thin crust.
3) Crane operated on a hill or sloping surface. Crane will tip at less than rated capacity when load is lifted on downhill side.

WARNING

AS THE BOOM IS LOADED, DEFLECTION OF THE BOOM, TIRES, ETC., WILL INCREASE THE LOAD RADIUS. BE CONSERVATIVE IN YOUR CAPACITY ESTIMATE.

Sheave Block and Downhaul Weight

The capacity chart shows the approved hoist rope arrangements. The downhaul weight and sheave blocks supplied by MEC are specially designed to operate the Anti-Two Block system. Other blocks or downhauls may bypass this system and create a dangerous condition. Notice the load limit for each hoist rope arrangement.

The keeper pins that pass through the sheave plates must be locked in place with cotters to hold the line on the sheaves. The load line must pass through the center of the downhaul, through the wedge socket, and the dead end clamped in the block, as shown in the figure below.

When resting the downhaul or sheave block on the ground for changing it, use the following procedure to prevent fouling the load line on the hoist. Raise the boom about 5 ft (1.5 m) and lower the hoist until the hook nearly touches the ground. Then lay the hook on the ground by lowering the boom, not the hoist.

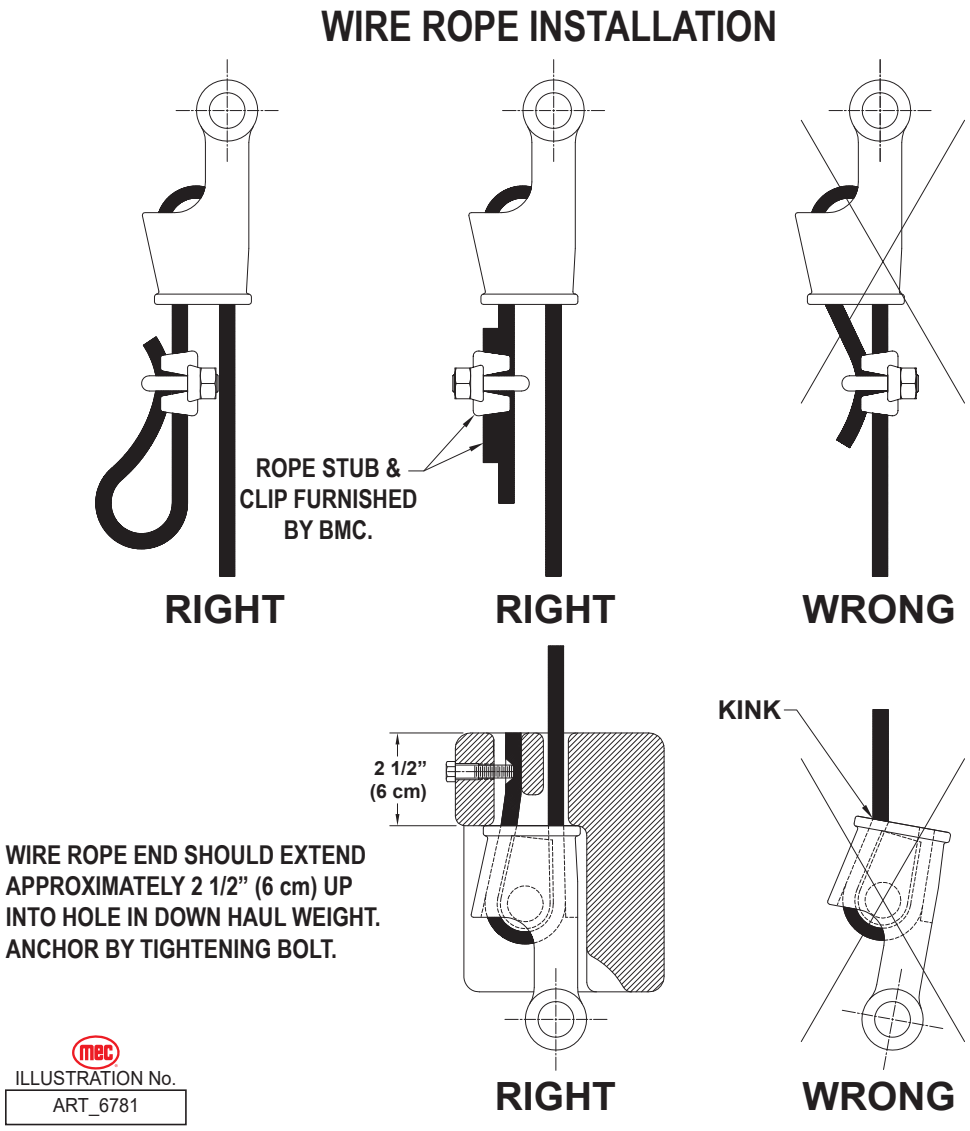

Two-Part Line Reeving

For loads above 9000 pounds (4,080 kg), the sheave block must be used. The wedge socket should be pinned to the two-part-line lug, as shown in the figure. The dead end of the rope in the wedge socket should be clamped, as shown in the figure.

The clamp must not be used on the live part of the rope. This will seriously weaken the rope by metal fatigue over a number of cycles.

The sheave block should hang straight, and the top of the block should meet the boom sheave plates squarely when pulled up snugly.

FALLING OBJECTS!

WARNING

DO NOT USE ROPE CLIP ON LIVE SIDE OF THE LOAD HOIST ROPE! DEATH OR SERIOUS INJURY CAN RESULT FROM A SERIOUSLY WEAKENED ROPE CAUSED BY A ROPE CLIP!

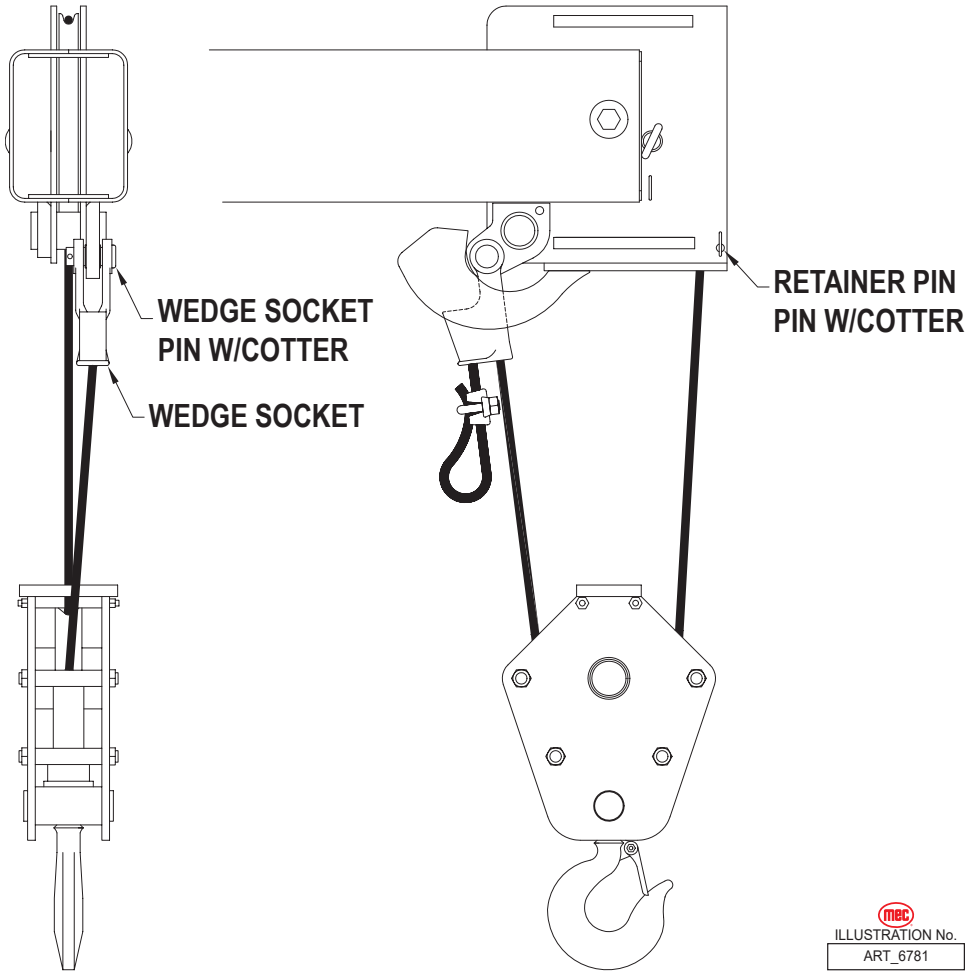

Safety Devices

Anti-Two-Block System:

This system prevents damage to the hoist rope and machine components from accidentally pulling the load hook against the boom tip. A pivot arm-actuated electric switch is connected through a cable reel mounted on the boom to a solenoid dump valve in the hydraulic circuit. This valve will dump the HOIST RAISE, TELESCOPE EXTEND and BOOM LOWER, SWING LEFT and SWING RIGHT circuits. No other circuits are affected. These circuits are returned to normal operation by operating the HOIST LOWER or TELESCOPE RETRACT control.

An emergency override switch is provided so the boom can be operated in case of system failure. This key-operated switch is located under the left side of the instrument panel.

WARNING

We recommend the emergency override switch be used with discretion. Improper or careless use of this switch can cause damage to the crane and endanger people and property. The operator who uses this key in an emergency should use good judgment.

Maintenance

DO NOT operate this machine until you have read and understood this manual, have performed the Workplace Inspection, Pre-Start Inspection and Routine Maintenance, and have completed all the test operations detailed in the Operating Instructions section.

Tag and remove a damaged, malfunctioning or modified machine from service. DO NOT use a damaged, malfunctioning or modified machine.

Use the Pre-Start Inspection to determine what Routine Maintenance is required. The operator may perform only the routine maintenance items specified in this manual.

IMPORTANT: Scheduled maintenance inspection checklists are included in this manual for use only by qualified service technicians. Only qualified service technicians may perform repairs to the machine. After repairs are completed, the operator must perform a Pre-Start Inspection before proceeding to the Functions Test.

DANGER

Hydraulic fluid under pressure can penetrate and burn skin, damage eyes, and may cause serious injury, blindness, and death. Repair leaks immediately. Fluid leaks under pressure may not always be visible. Check for pin hole leaks with a piece of cardboard, not your hand.

WARNING

NEVER perform work under the boom assembly with the boom elevated without first supporting the boom assembly.

Failure to perform scheduled maintenance at recommended intervals may result in injury or death. Keep maintenance records current and accurate.

Immediately report any damage, defect, unauthorized modification or malfunction to your supervisor. Any defect must be repaired prior to continued use. DO NOT use a damaged, modified or malfunctioning machine.

DO NOT hang anything over any control handle at any time.

CAUTION

Never leave hydraulic components or hoses open. Plug all hoses and fitting immediately after disassembly to protect the system from outside contamination (including rain).

Never open a hydraulic system when there are contaminants in the air.

Always clean the surrounding area before opening hydraulic systems.

Use only recommended lubricants. Improper lubricants or incompatible lubricants may cause as much damage as no lubrication.

CAUTION

Watch for makeshift “fixes” which can jeopardize safety as well as lead to more costly repair.

Inspection and maintenance should be performed by qualified personnel familiar with the equipment.

Inspection Tests

Inspection Tests

Serial No:_____ MODEL: CD - 9T

Customer:_____

SO#:_____

A - Overload Test

1. Extend the Outriggers
2. Lift the booms to the horizontal position with the boom over the front and retracted.
3. Load 2150 lbs. onto the hoist. Lift the weight off the ground.
4. Extend the boom. The alarm should NOT sound up to about 29' extension.
5. Retract the load to 22' and rotate the load over the side. Extend again. The alarm should sound near 25'.
6. Return the load to horizontal, still over the side and retract the load to about 12' extension. Retract the outriggers. Extend the load. The alarm should sound near a 15' extension.

B - Testing the anti-two-blocking device

1. Lower the main booms.
2. Push up the anti-two-block to make physical contact with the boom.
3. Operate the hoisting up operation.
    a. Result: The operation would be prevented

C - Check inclination and length sensors

1. Press the LMI button on the display
    a. Result: The display screen should be able to display the tilt angle of the boom, the extension length of the main boom.
2. Operate the outriggers controls to lower the outriggers.
3. Operate the main boom to lift upwards while observing the display screen.
    a. Result: The main boom should lift, and the angle of the main boom in the display screen should increase.
4. Operate the main boom to lower.

INSP-002 REV 0 MEC Aerial Work Platforms 7/2/2026
1401 S. Madera Ave, Kerman CA 93630
Phone: 559.710.2425

Quality Inspection

Quality Inspection

Serial No:_____ **MODEL: CD - 9T**

Customer:_____

SO#:_____

	Pre-Delivery Inspection	Approved
	Reference Pre-Delievery Tests Document	
1	Free of physical damage, such as cracked welds, dents, rust, and corrision	
2	Free of damage to Electrical Components, Cables and Wiring	
3	Free of fluid leaks from hose connections, fittings, manifolds, hydraulic cylinders, engine compartment, and from under the chassis	
4	Engine Oil Level is correct. 15W40	
5	Radiator and Coolant Reservoir fluid Levels are correct. 50/50 Pre-Mix	
6	Transmission Fluid Level is correct	
7	Fuel Level - ULSD	
8	Hydraulic Fluid Level is correct. THF1000 or MV	
9	Swing Bearing Lubed	
10	Torque Hubs Fluid Level is correct. 75W-90W Oil	
11	Wheel Lug nuts Torqued 22mm G8 330ftlbs	
12	Pins, bolts and retainers are all secure	
13	Engine Starts	
14	Foot brake is responsive	
15	Parking brake engages	
16	Accelerator Pedal provides smooth acceleration	
17	Steering is responsive	
18	All Boom functions and boom slewing works correctly	
19	Wire rope is free of kinks and fraying	
20	Outriggers function and level correctly	
21	Turn Signal lights come on when selected	
22	Flashing Lights & Alarms function correctly	
23	ECU Flash is current	
24	Overload Test Passed per INSP-002 Item A	
25	Anti Two Block system Passed per INSP-002 Item B	
26	Inclination and Length Sensors passed per INSP-002 Item C	
27	After Inspection all covers are properly fitted and retained	
28		
29		
30		
31		
32		
33		
34		
35		
36		
37		
38		
39		
40		
41		
42		
43		
44		

INSP-003 REV 0 6/30/2026

MEC Aerial Work Platforms
1401 S. Madera Ave, Kerman CA 93630
Phone: 559.710.2425

1 of 1

Pre-Delivery Inspection and Test Report

Pre-Delivery Inspection

And Test Report

Dealer_____

Street_____

City/State/Zip_____

Phone Number_____

Contact _____

Date:_____

Serial No:_____

Model:_____ CD-9T

- **Check each item listed below**
- **Use proper Operating, Service, and Maintenance manual for specific information and settings**
- **If item is found to be "Unacceptable" make the necessary repairs and check the "Repaired" Box.**
- **When all items are "Acceptable", the unit is ready for service.**

Key: "Y" Yes/Acceptable

"N" No/Unacceptable

"R" Repaired

	Pre-Delivery Inspection	Y	N	R
1	Free of physical damage, such as cracked welds, dents, rust, and corrision			
2	Free of damage to Electrical Components, Cables and Wiring			
3	Free of fluid leaks from hose connections, fittings, manifolds, hydraulic cylinders, engine compartment, and from under the chassis			
4	Engine Oil Level is correct			
5	Radiator and Coolant Reservoir fluid Levels are correct			
6	Transmission Fluid Level is correct			
7	Fuel Level			
8	Hydraulic Fluid Level is correct			
9	Pins, bolts and retainers are all secure			
10	Engine Starts			
11	Foot brake is responsive			
12	Parking brake engages			
13	Accelerator Pedal provides smooth acceleration			
14	Steering is responsive			
15	All Boom functions and boom slewing works correctly			
16	Wire rope is free of kinks and fraying			
17	Outriggers function and level correctly			
18	Turn Signal lights come on when selected			
19	Flashing Lights & Alarms function correctly			
22	Check inclination and length sensors			
23	After Inspection all covers are properly fitted and retained			
24	Anti Two Block system cuts out boom operation			

Comments:

_____

_____

_____

Signature/Mechanic: _____ **Date:** _____

INSP-004 REV 0 7/2/2026

MEC Aerial Work Platforms
1401 S. Madera Ave, Kerman CA 93630
Phone: 559.710.2425

1 of 1

Inspection and Test Report

Function Speed Verification

Date:_____

Serial No:_____

Model:_____

CD - 9T	Machine Serial No.		
Machine Speeds	**Specified Range**	**Actual**	**Initials of Operator**
ENGINE RPM	1100 / 1600		
2 Drive Speeds			
Creep Mode at Elevation			
Boom Raise / Lower			
Telecope Extrend/Retract			
Hook Lift/Lower			
Swing RH/LH			
Outrigger Down/Up			
Steer Right/Left			

INSP-005 REV 1 7/16/2026

MEC Aerial Work Platforms
1401 S. Madera Ave, Kerman CA 93630
Phone: 559.710.2425

Page 1 of 1

Lubrication

Operator may perform routine maintenance only. Lubrication listed as Scheduled Maintenance must be performed by a qualified service technician.

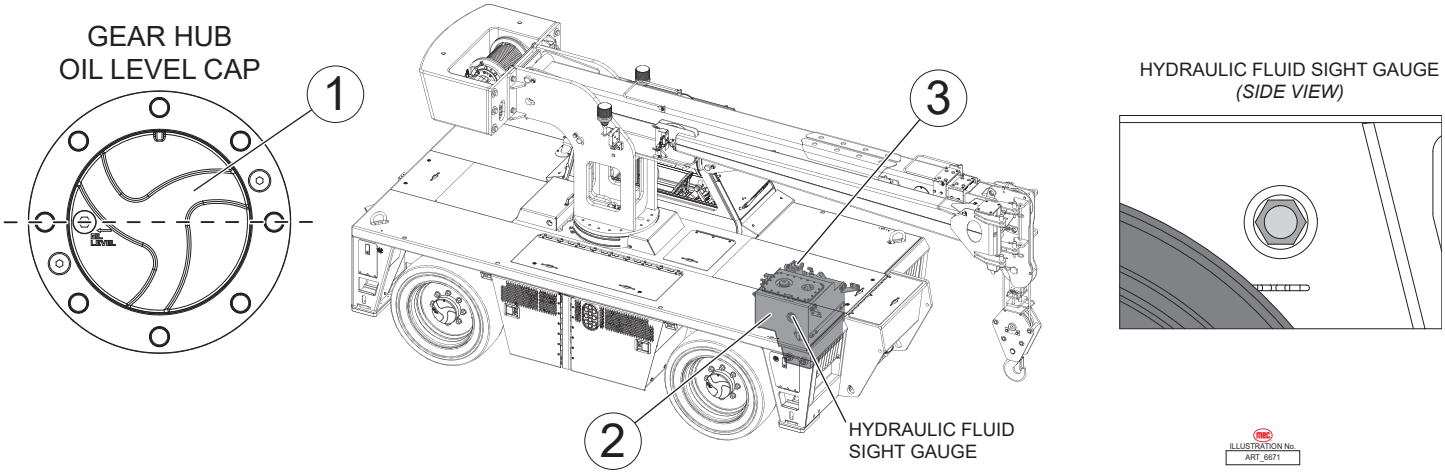

Item		Specification	Frequency
1	Hubs	SAE 90 Multipurpose Hypoid Gear Oil API Service Classification GL5	**Scheduled Maintenance** • Check every three months or 150 hours, whichever occurs first. • Change yearly or every 600 hours, whichever occurs first.
2	Hydraulic Reservoir	**Fluid Type** • Chevron 1000THF Chevron Rando Premium MV **Temperature Range** • >30°F (0°C) • < 30°F (0°C) Do not substitute other fluids as pump damage may result. Fill to the middle of the sight gauge with boom and extension in the stowed position and stabilizers retracted.	**Routine Maintenance** • Check level daily **Scheduled Maintenance** • Change yearly or every 600 hours, whichever occurs first
3	Hydraulic Filter	Filter Element (Located inside Hydraulic Reservoir)	**Scheduled Maintenance** **Normal Conditions** • Change every six months or 300 hours, whichever occurs first **Severe Conditions -- very dusty, exceptionally hot or exceptionally cold conditions** • Change every three months or 150 hours, whichever occurs first

Troubleshooting

WARNING

Should you experience erratic operation or notice any malfunction while operating this machine, discontinue use immediately.

Call for assistance and report the incident to your supervisor, and do not use the machine until it has been checked by a trained, qualified mechanic.

Machine functions will not operate

- Adequate fuel supply?
- Proper fuel blend (i.e. winter blend in cold weather)?
- Battery properly connected?
- Battery fully charged?
- Circuit Breaker tripped?
- Hydraulic fluid level low?
- Obvious fluid leak or damaged component?
- Wires disconnected, broken, or loose?

Decals

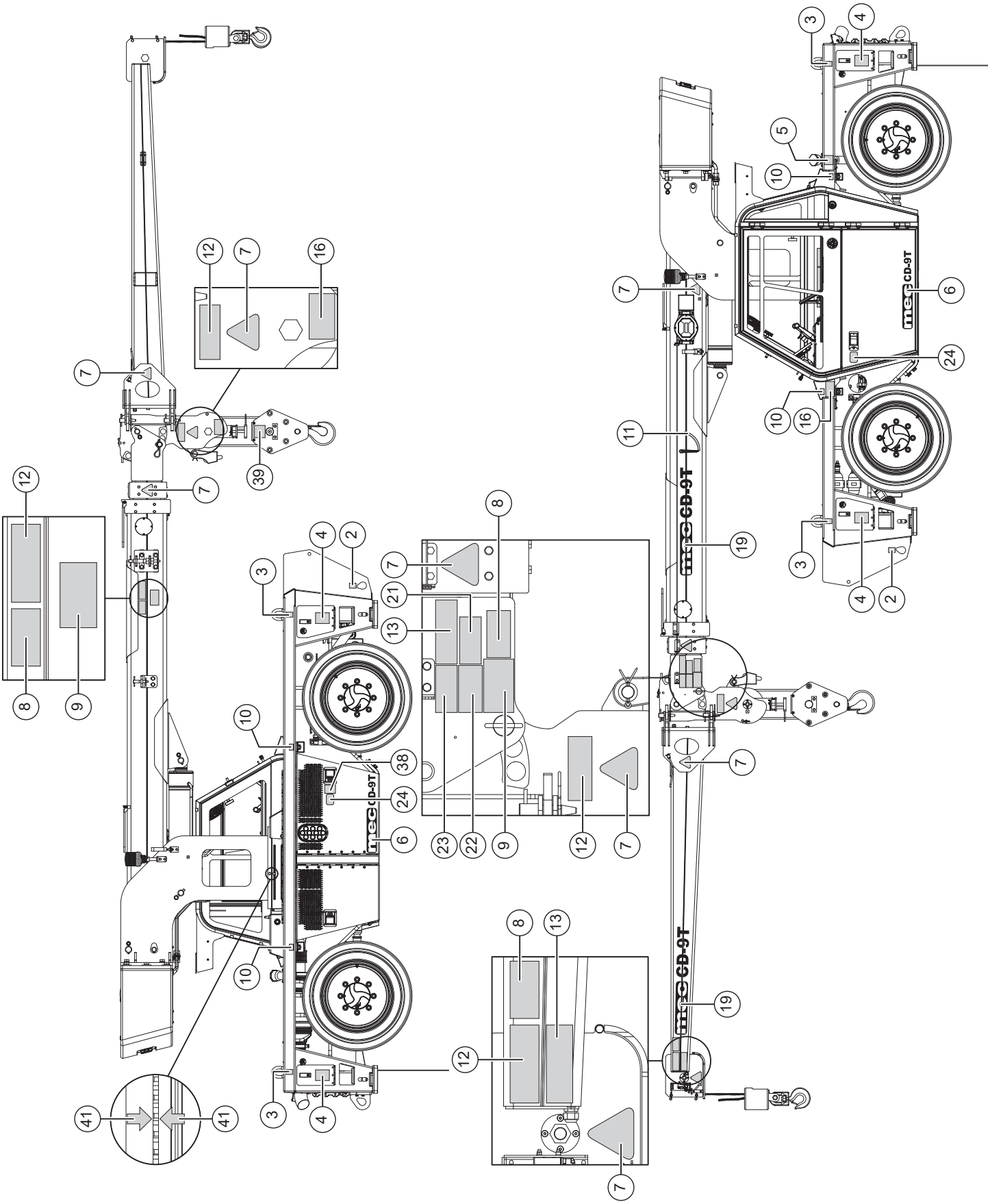

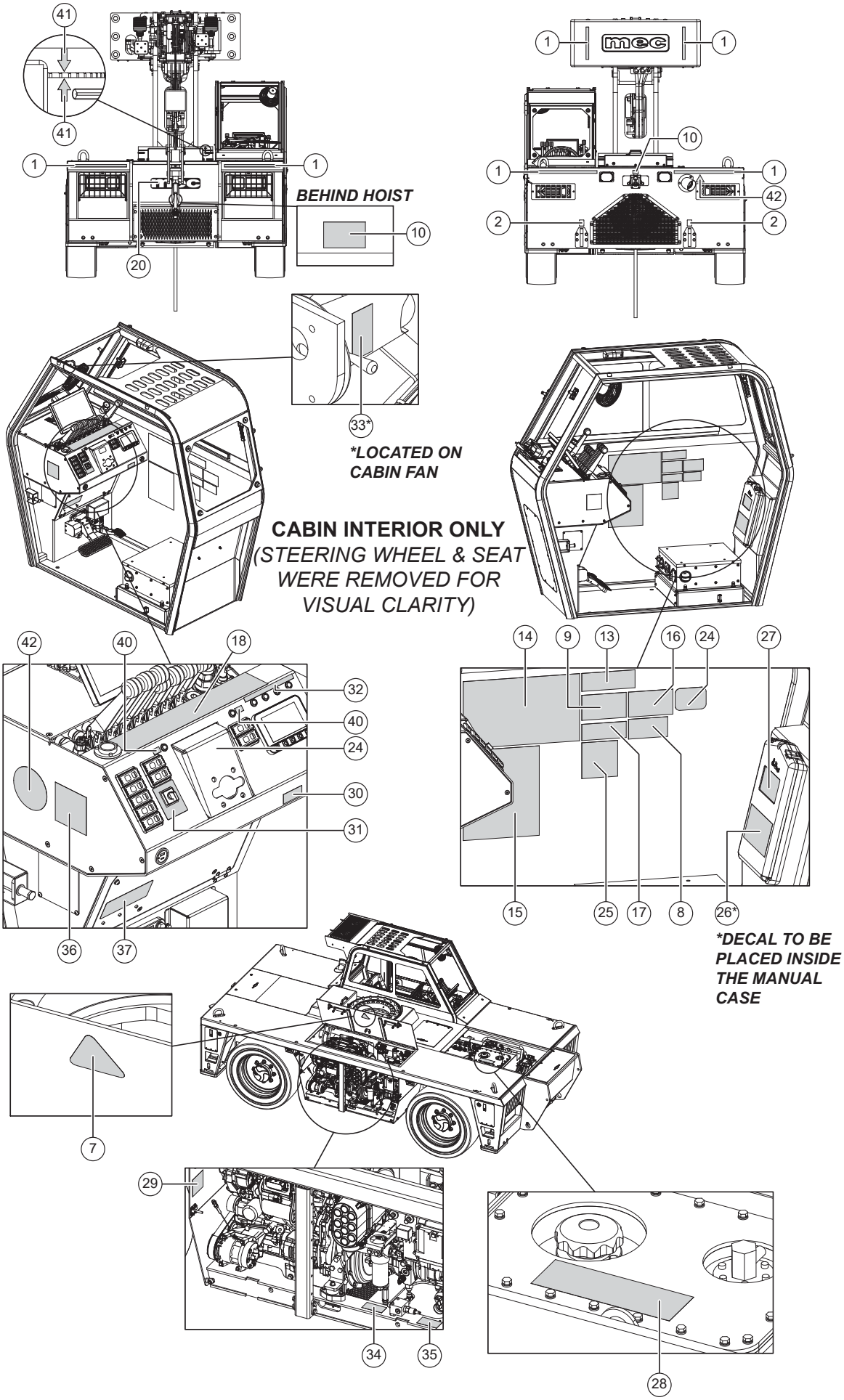
41
41
1
1
20
BEHIND HOIST
10
1
1
10
1
1
42
2
2
33*
*LOCATED ON CABIN FAN
CABIN INTERIOR ONLY
(STEERING WHEEL & SEAT WERE REMOVED FOR VISUAL CLARITY)
42
40
18
32
40
24
30
31
36
37
14
9
13
16
24
27
15
25
17
8
26*
*DECAL TO BE PLACED INSIDE THE MANUAL CASE
7
29
34
35
28

1 7982 Qty. - 6	2 49748 Qty. - 4	3 45899 Qty. - 4	4 9465 Qty. - 4	5 93182 Qty. - 1
6 97216 Qty. - 2	7 9910 Qty. - 8	8 97457 Qty. - 4	9 97458 Qty. - 3	10 97494 Qty. - 6
11 97480 Qty. - 1	12 97479 Qty. - 4	13 97461 Qty. - 3	14 49771 Qty. - 1	15 21766 Qty. - 1
16 97459 Qty. - 3	17 97460 Qty. - 1	18 97481 Qty. - 1	19 97215 Qty. - 2	20 94114 Qty. - 1
21 97475 Qty. - 1	22 97476 Qty. - 1	23 97477 Qty. - 1	24 97469 Qty. - 3	25 97575 Qty. - 1
26 97576 Qty. - 1	27 8911 Qty. - 1	28 92117 Qty. - 1	29 93806 Qty. - 1	30 97597 Qty. - 1
31 49995 Qty. - 1	32 49996 Qty. - 1	33 49997 Qty. - 1	34 90732 Qty. - 1	35 93805 Qty. - 1
36 97596 Qty. - 1	37 60905 Qty. - 1	38 61000 Qty. - 1	39 62969 Qty. - 1	40 60875 Qty. - 2
41 61558 Qty. - 4	42 49950 Qty. - 1	43 97657 Qty. - 1		

Serial Plate

Serial Plate Location

The serial plate is attached to the machine at the time of manufacture. Important information about the machine is recorded on the serial plate.

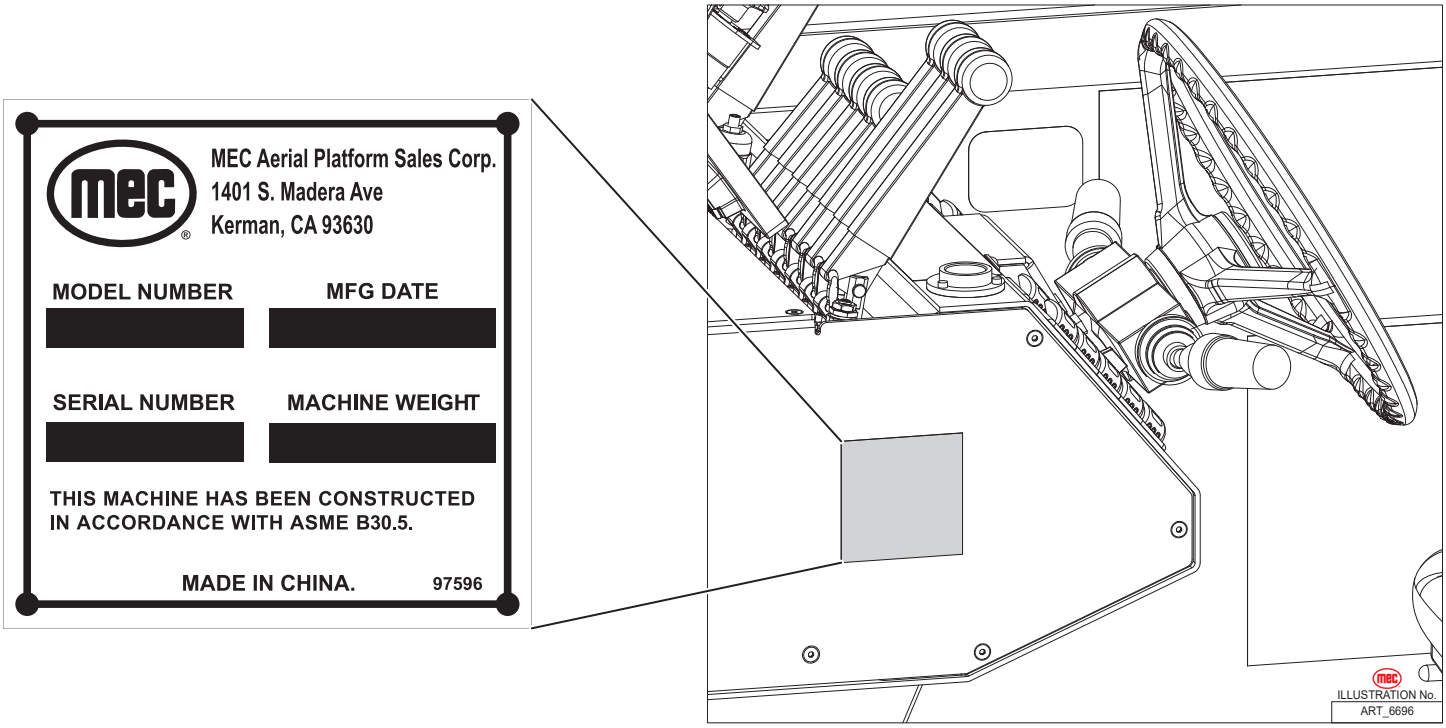

Serial Plate Description

MODEL NUMBER: Identifies the machine.

MFG DATE: Month / Year of manufacture.

SERIAL NUMBER: Identifies a machine with reference to its original owner. Refer to the number when requesting information or ordering parts.

MACHINE WEIGHT: The weight of the machine with no options.

Transport and Lifting Instructions

Safety Information

WARNING

This section is provided for reference and does not supersede any government or company policy regarding the loading, transport or lifting of MEC machinery.

Truck drivers are responsible for loading and securing machines, and should be properly trained and authorized to operate MEC machinery. Drivers are also responsible for selecting the correct and appropriate trailer according to government regulations and company policy. Drivers must ensure that the vehicle and chains are strong enough to hold the weight of the machine (see the serial number plate for machine weight).

ONLY properly trained and qualified operators shall load and unload this machine. While loading and unloading, the transport vehicle must be parked on a level surface and secured to prevent rolling.

Driving or Winching onto or off of a Transport Vehicle

WARNING

ONLY properly trained and qualified operators shall load and unload this machine.

Read and understand all safety, control, and operating information found on the machine and in this manual before operating the machine.

Whether winching or driving the machine on to a truck or trailer, always check the area for dangerous situations before moving the machine.

If driving the machine, always use a second person acting as a spotter to make sure the person loading the machine avoids dangerous situations.

Driving

- Engage Speed 1 on the handle selector for slow speed.
- Carefully drive the machine off or on to the transport vehicle.
- Make sure you can see the second person giving guidance.

Securing to Truck or Trailer for Transport

- Turn the Ignition Key Switch to OFF and remove the key before transport.
- Turn the Battery Disconnect Switch to OFF before transport.
- Inspect the entire machine for loose or unsecured items.
- Secure the chassis.

Securing the Chassis

Make sure each of your chains is rated to hold the machine's weight (see serial number plate for Specifications). Use at least 4 chains.

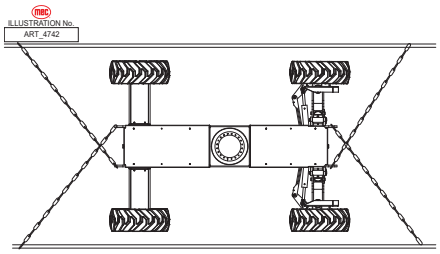

Loop the chain through the tie-down point and connect the chain hook to the chain.

Be sure chains are arranged so that they do not damage the machine.

Securing the Hoist

The hoist must be secured to prevent it from swinging and potentially causing harm or damage during loading, unloading, or transportation of the machine. Make sure that the boom and hoist are both fully retracted to the stowed position, then using the designated wire rope hook retainer at the front of the chassis engage the hook and take up the slack sufficient to steady the hoist block in place.

Lifting

Only qualified riggers should rig and lift this machine.

DANGER

Ensure that the crane capacity, loading surfaces, chains, straps and slings are sufficient to withstand the machine weight. Check the serial plate for the machine weight! Ensure that the platform is unloaded and that all material and tools have been removed.

Make sure that the boom is fully stowed and retracted, with the hoist secured.

Attach lifting hooks as shown in the diagram to the 4 lifting points with two located both near the front and rear of the machine on top of the chassis.

Adjust the lifting devices in such a way as to keep the machine level and without causing damage to it.

X-Axis	Y-Axis
44.7in (1136.5)	29in (738mm)

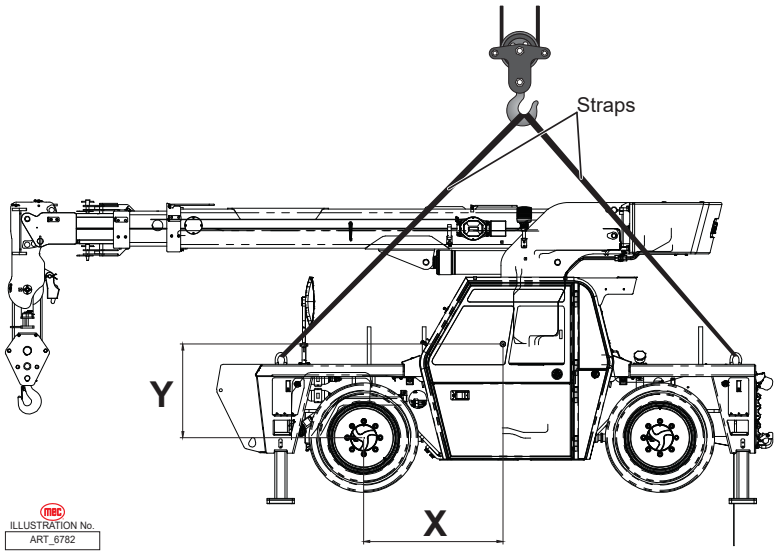

MEC Parts Order Form

Phone: 559-710-2405
Fax: 559-400-6723
Email: Parts@mecawp.com

Please Fill Out Completely:

Date: _____ **Ordered By:** _____
Account: _____ **Your Fax No.:** _____
Bill to: _____ **Ship to:** _____

Purchase Order Number _____ **Ship VIA** _____

*** All orders MUST have a Purchase Order Number* *****Fed Ex shipments require Fed Ex account number*

Part Number	Description	Quantity	Price

All back-ordered parts will be shipped when available via the same ship method as original order unless noted below:

_____ Ship complete order only - No Backorders
_____ Ship all available parts and contact customer on disposition of back-ordered parts
_____ Other (Please specify)

Signature _____

Limited Owner Warranty

MEC Aerial Platform Sales Corp. warrants its equipment to the original purchaser against defects in material and/or workmanship under normal use and service for one (1) year from date of registered sale or date the unit left the factory if not registered. MEC Aerial Platform Sales Corp. further warrants the structural weldments of the main frame and scissor arms to be free from defects in material or workmanship for five (5) years from date of registered sale or date unit left the factory if not registered. Excluded from such warranty is the battery(s) which carries a ninety (90) day warranty from described purchase date. Warranty claims within such warranty period shall be limited to repair or replacement, MEC Aerial Platform Sales Corp's option, of the defective part in question and labor to perform the necessary repair or replacement based on MEC Aerial Platform Sales Corp's then current flat rate, provided the defective part in question is shipped prepaid to MEC Aerial Platform Sales Corp. and is found upon inspection by MEC Aerial Platform Sales Corp. to be defective in material and/or workmanship. MEC Aerial Platform Sales Corp. shall not be liable for any consequential, incidental or contingent damages whatsoever. Use of other than factory authorized parts; misuse, improper maintenance, or modification of the equipment voids this warranty. The foregoing warranty is exclusive and in lieu of all other warranties, express or implied. All such other warranties, including implied warranties of merchantability and of fitness for a particular purpose, are hereby excluded. No Dealer, Sales Representative, or other person purporting to act on behalf of MEC Aerial Platform Sales Corp. is authorized to alter the terms of this warranty, or in any manner assume on behalf of MEC Aerial Platform Sales Corp. any liability or obligation which exceeds MEC Aerial Platform Sales Corp's obligations under this warranty.

MEC Aerial Work Platforms

1401 S. Madera Avenue, Kerman, CA 93630 USA
Toll Free: 1.877.MEC.LIFT or 1.877.632.5438
Phone: 1.559.710.2425
Fax: 1.559.710.2390
info@MECawp.com
www.MECawp.com