# Parts Manual

# Micro19+/Micro19-XD+

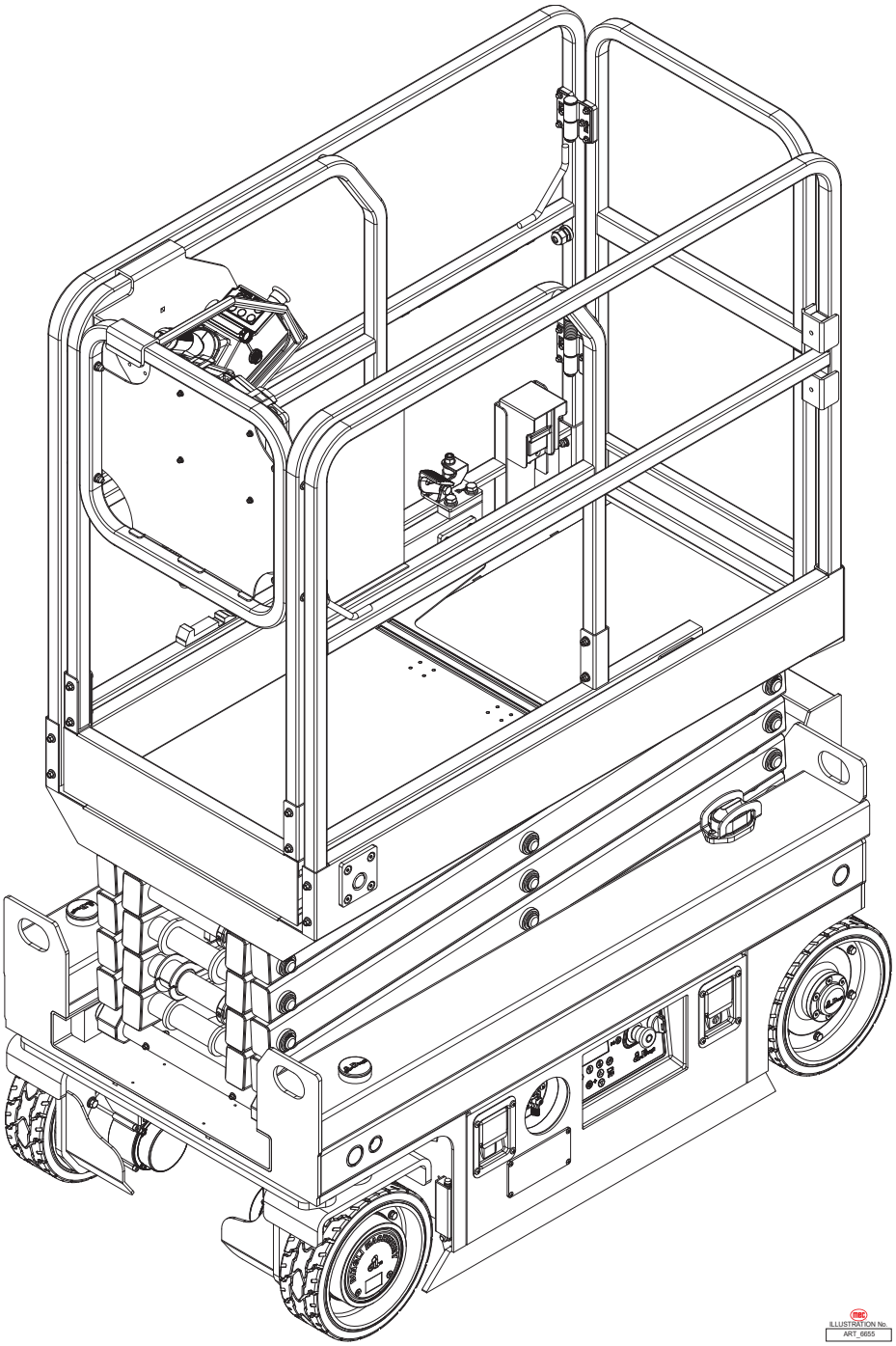


**Meets requirements of ANSI A92.20-2020 and CSA B354.6-2019.**

From SN 20600100
From SN 20700100

Part # 97627
October 2026

# Revision History

| Date | Reason for Update |
|---|---|
| August 2026 | New Release |

MEC Aerial Work Platforms

1401 S. Madera Avenue, Kerman, CA 93630 USA
Toll Free: 1.877.MEC.LIFT or 1.877.632.5438
Phone: 1.559.710.2425
Fax: 1.559.710.2390
info@MECawp.com
www.MECawp.com

# Table of Contents

**Parts** . . . . . 1
*Parts Introduction* . . . . . 1

**Section 1 - Chassis** . . . . . 2
*Steer Linkage and Wheels Assembly,* . . . . . 2
*Rear Wheel Assembly,* . . . . . 5
*Pothole Protection Assembly* . . . . . 7
*Battery Pack Module* . . . . . 9
*Hydraulic Power Unit* . . . . . 11
*Motor Controller Assembly* . . . . . 13
*Ground Control Assembly* . . . . . 15
*Ladder and Accessories* . . . . . 17
*Leak Containment System.* . . . . . 20
*Outdoor Limit Switch Assembly* . . . . . 22

**Section 2 - Scissor** . . . . . 24
*Scissor Assembly* . . . . . 24

**Section 3 - Platform** . . . . . 28
*Main Platform Assembly* . . . . . 28
*Platform Extension Assembly (Micro19+)* . . . . . 30
*Platform Extension Assembly (Micro19-XD+)* . . . . . 32
*Pallet Installation (Micro19-XD+)* . . . . . 34
*Platform Locking Device Assembly* . . . . . 36
*Platform Control Assembly* . . . . . 38
*Platform Control Box Assembly* . . . . . 40

**Section 4 - Hydraulics** . . . . . 42
*Lower Lift Cylinder Assembly* . . . . . 42
*Upper Lift Cylinder Assembly* . . . . . 44
*Hydraulic Hoses and Fittings* . . . . . 46

**Section 5 - Electrical System** . . . . . 48
*Electrical Harness* . . . . . 48
*Power to Platform* . . . . . 87

**Section 6 - Decals** . . . . . 52
*Micro19+ Decals* . . . . . 52
*Micro19-XD+ Decals* . . . . . 54

# Parts Introduction

This Parts sections consists of illustrated parts sections and is designed to provide you, the customer, with illustrations and the list of associated parts needed to properly maintain the MEC self-propelled aerial work platform. When used in conjunction with the Service section in this manual and the Operator's Manual (provided separately), this manual will assist you in making necessary adjustments and repairs, and identifying and ordering the correct replacement parts.

All parts represented here are manufactured and supplied in accordance with MEC quality standards.

We recommend that you use genuine MEC parts to ensure proper operation and reliable performance.

To obtain maximum benefits from your MEC Aerial Work Platforms, always follow the proper operating and maintenance procedures. Only trained authorized personnel should be allowed to operate or service this machine. Service personnel should read and study the Operator's, and the Service and Parts Manuals in order to gain a thorough understanding of the unit prior to making any repairs.

# Steer Linkage and Wheels Assembly

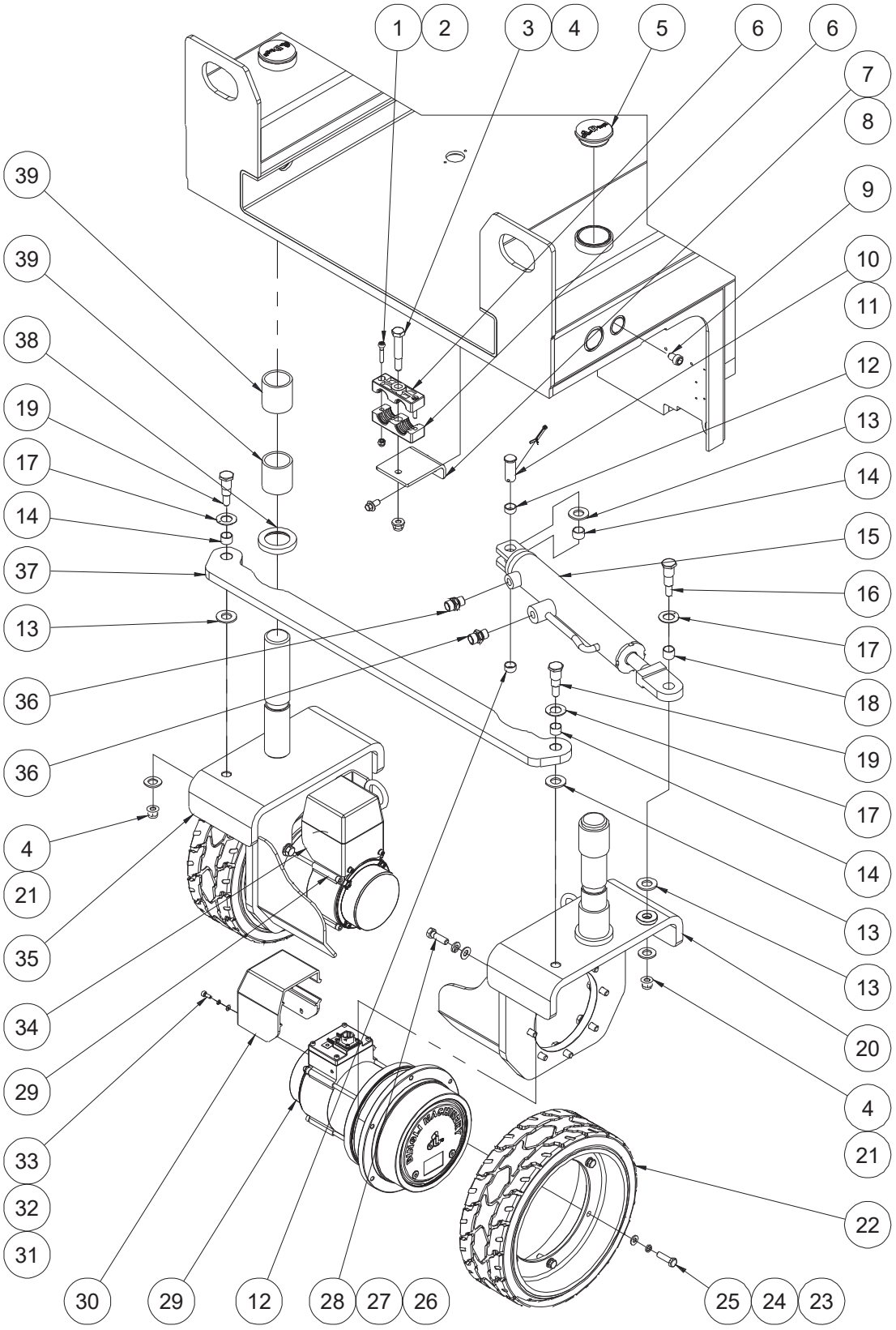


ILLUSTRATION No. ART_6728 Micro19+ / Micro19-XD+ Steer Linkage and Wheels Assembly

| Item | Part Number | Description | Qty. |
|---|---|---|---|
| 1 | 53207 | Screw SHCS M06-1.00 × 30 ZP | 2 |
| 2 | 50047 | Nut NNYL M06-1.00 ZP | 2 |
| 3 | 45420 | Bolt | 1 |
| 4 | 50311 | Nut NNYL M10-1.50 Flange ZP | 4 |
| 5 | 43554 | Cover | 2 |
| 6 | 45313 | Hose Clamp | 2 |
| 7 | 60926 | Hose Clamp Bracket | 1 |
| 8 | 53194 | Screw HHCS M08-1.25 × 16 Serrated Flange ZP | 2 |
| 9 | 41794 | Screw, Steering Wheels | 2 |
| 10 | 41321 | Pin | 1 |
| 11 | 43563 | Cotter Pin | 1 |
| 12 | 41225 | Bearing (Steer Cyl BNG) | 2 |
| 13 | 43564 | Washer | 4 |
| 14 | 41210 | Bearing, Axle | 3 |
| 15 | 60927 | Steer Cylinder Assembly (to SN 20600250, from SN 20700100 to 20700102, from SN 20700253 to 20700427) | 1 |
| 15.B | 61050 | Steer cylinder assembly (From SN 20600251, from SN 20700103 to 20700252, from SN 20700428) | 1 |
| 16 | 60924 | Pin | 1 |
| 17 | 41222 | Bearing (Thrust Washer) | 3 |
| 18 | 60925 | Bearing | 1 |
| 19 | 60928 | Pin | 2 |
| 20 | 60929 | Steer yoke weldment left (to SN 20600250, from SN 20700100 to 20700102, from SN 20700253 to 20700427) | 1 |
| 20.B | 61051 | Steer yoke weldment left (From SN 20600251, from SN 20700103 to 20700252, from SN 20700428) | 1 |
| 21 | 53049 | WSHR M14 Standard Flat Washer ZP | 3 |
| 22 | 60921 | Wheel, Micro 19+ | 2 |
| 23 | 50001 | WSHR M08 Standard Flat Washer ZP | 12 |
| 24 | 53055 | WSHR M08 Spring Washer ZP | 12 |
| 25 | 50032 | Screw HHCS M08-1.25 × 30 ZP | 12 |
| 26 | 53317 | WSHR 3/8 Standard Flat Narrow Washer ZP | 14 |
| 27 | 53316 | WSHR 3/8 Spring Washer ZP | 14 |
| 28 | 50556 | Screw HHCS 3/8-16 × 1 1/4 ZP | 14 |
| 29 | 60877 | Micro19+, Micro19-XD+ Drive Motor Assembly (Includes Motor, Reducer, Brake) | 2 |
| -- | 60931 | Motor (With Brake) | 1 |
| -- | 60932 | Reducer | 1 |
| -- | 60933 | Brake | 1 |
| 30 | 60934 | Left Motor Cover | 1 |
| 31 | 53038 | WSHR M05 Standard Flat Washer ZP | 6 |
| 32 | 53043 | WSHR M05 Spring Washer ZP | 6 |

| | | | |
|---|---|---|---|
| 33 | 53116 | Screw SHCS M05-0.80 × 12 ZP | 6 |
| 34 | 60935 | Right Motor Cover | 1 |
| 35 | 60936 | Steer Yoke Weldment Right<br>(to SN 20600250, from SN 20700100 to 20700102, from SN 20700253 to 20700427) | 1 |
| 35.B | 61052 | Steer Yoke Weldment Right<br>(From SN 20600251, from SN 20700103 to 20700252, from SN 20700428) | 1 |
| 36 | 41298 | Straight Fitting (Adapter) | 2 |
| 37 | 60937 | Tie Rod | 1 |
| 38 | 60938 | Washer | 2 |
| 39 | 43556 | Bearing | 4 |

# Rear Wheel Assembly

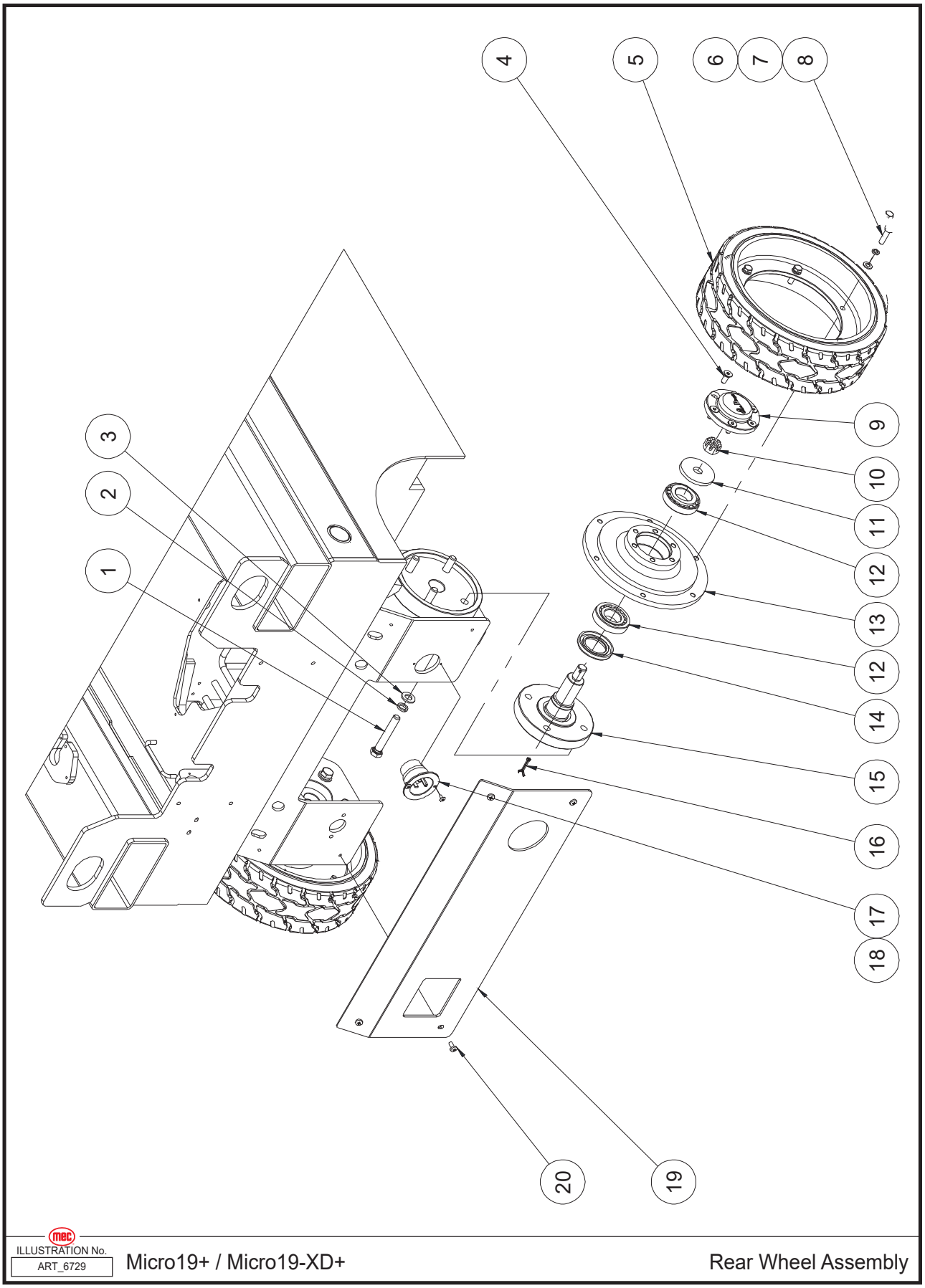

| Item | Part Number | Description | Qty. |
|---|---|---|---|
| 1 | 53685 | HHCS M12-1.75X80, Fully Threaded | 8 |
| 2 | 53148 | WSHR M12 Spring Washer ZP | 8 |
| 3 | 50003 | WSHR M12 Standard Flat Washer ZP | 8 |
| 4 | 53282 | Screw CSCS M08-1.25 × 20 ZP | 12 |
| 5 | 60921 | Wheel | 2 |
| 6 | 50001 | WSHR M08 Standard Flat Washer ZP | 12 |
| 7 | 53055 | WSHR M08 Spring Washer ZP | 12 |
| 8 | 50032 | Screw HHCS M08-1.25 × 30 ZP | 12 |
| 9 | 41237 | Shaft End Cover Plate | 2 |
| 10 | 53347 | Castle Nut M16-1.50 ZP | 2 |
| 11 | 41327 | Shim | 2 |
| 12 | 41024 | Bearing 30206 | 4 |
| 13 | 41803 | Wheel Plate | 2 |
| 14 | 60939 | TC-style Oil Seal 38 × 62 × 8 mm | 2 |
| 15 | 60940 | Spindle | 2 |
| 16 | 43563 | Cotter Pin | 2 |
| 17 | 41575 | Input Socket (5278-C) | 1 |
| 18 | 53263 | Screw THMS M04-0.70 × 8 ZP | 2 |
| 19 | 60942 | Cover | 1 |
| 20 | 53318 | Screw PHMS M06-1.00 × 12 ZP | 4 |

# Pothole Protection Assembly

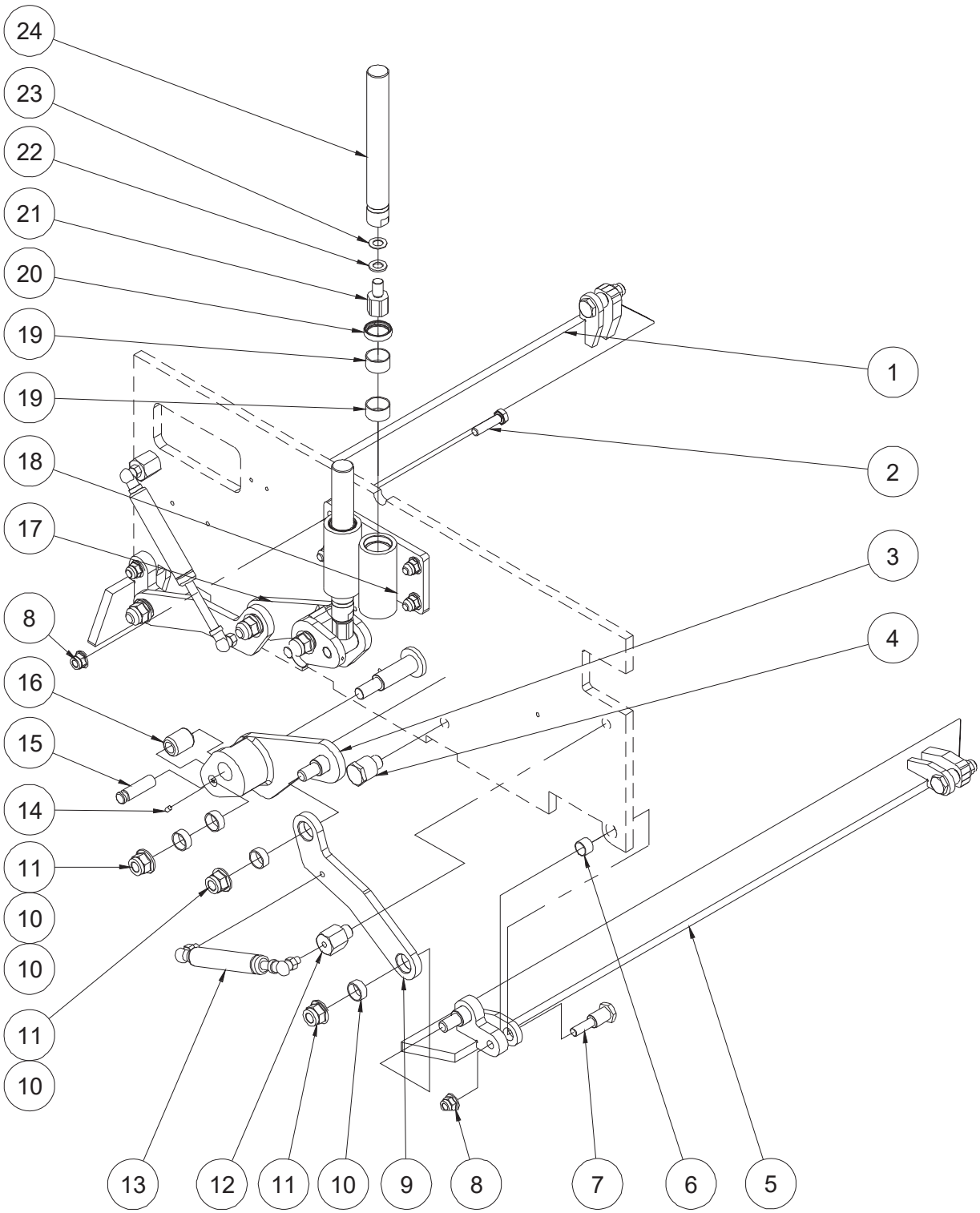


ILLUSTRATION No. ART_6730 Micro19+ / Micro19-XD+ Pothole Protection Assembly

| Item | Part Number | Description | Qty. |
|---|---|---|---|
| 1 | 60943 | Pothole Guard Weldment | 1 |
| 2 | 50237 | Screw HHCS M10-1.50 × 40 ZP | 4 |
| 3 | 41319 | Mid Linkage Weldment | 1 |
| 4 | 41211 | Limit, Annul (Pothole Bar) | 4 |
| 5 | 60944 | Pothole Guard Weldment | 1 |
| 6 | 41210 | Bearing, Axle | 4 |
| 7 | 41209 | Cross Board Annul (Axle, PHP) | 4 |
| 8 | 50311 | Nut NNYL M10-1.50 Flange ZP | 8 |
| 9 | 60945 | Pothole Link Plate | 2 |
| 10 | 41214 | Bearing (PHP Pivot Bng) | 8 |
| 11 | 53349 | Nut NNYL M14-2.00 Flange ZP | 6 |
| 12 | 41212 | Gas Pole Annul (PHP Pivot) | 2 |
| 13 | 41215 | Gas Spring | 2 |
| 14 | 53283 | Set Screw M05-0.80 × 10 Cone Point ZP | 2 |
| 15 | 41216 | Wheel Annul (PHP Roller Axle) | 2 |
| 16 | 41217 | Wheel (PHP Roller) | 2 |
| 17 | 41320 | Mid Linkage Weldment | 1 |
| 18 | 44609 | Pothole Guide | 1 |
| 19 | 41203 | Bearing (PHP Plunger) | 4 |
| 20 | 44610 | Seal | 2 |
| 21 | 41204 | Pressure Head | 2 |
| 22 | 44007 | Adjusting Washer 2 | 2 |
| 23 | 44008 | Adjusting Washer 3 | 2 |
| 24 | 60946 | Pothole Hole Pusher Pin | 2 |

# Battery Pack Module

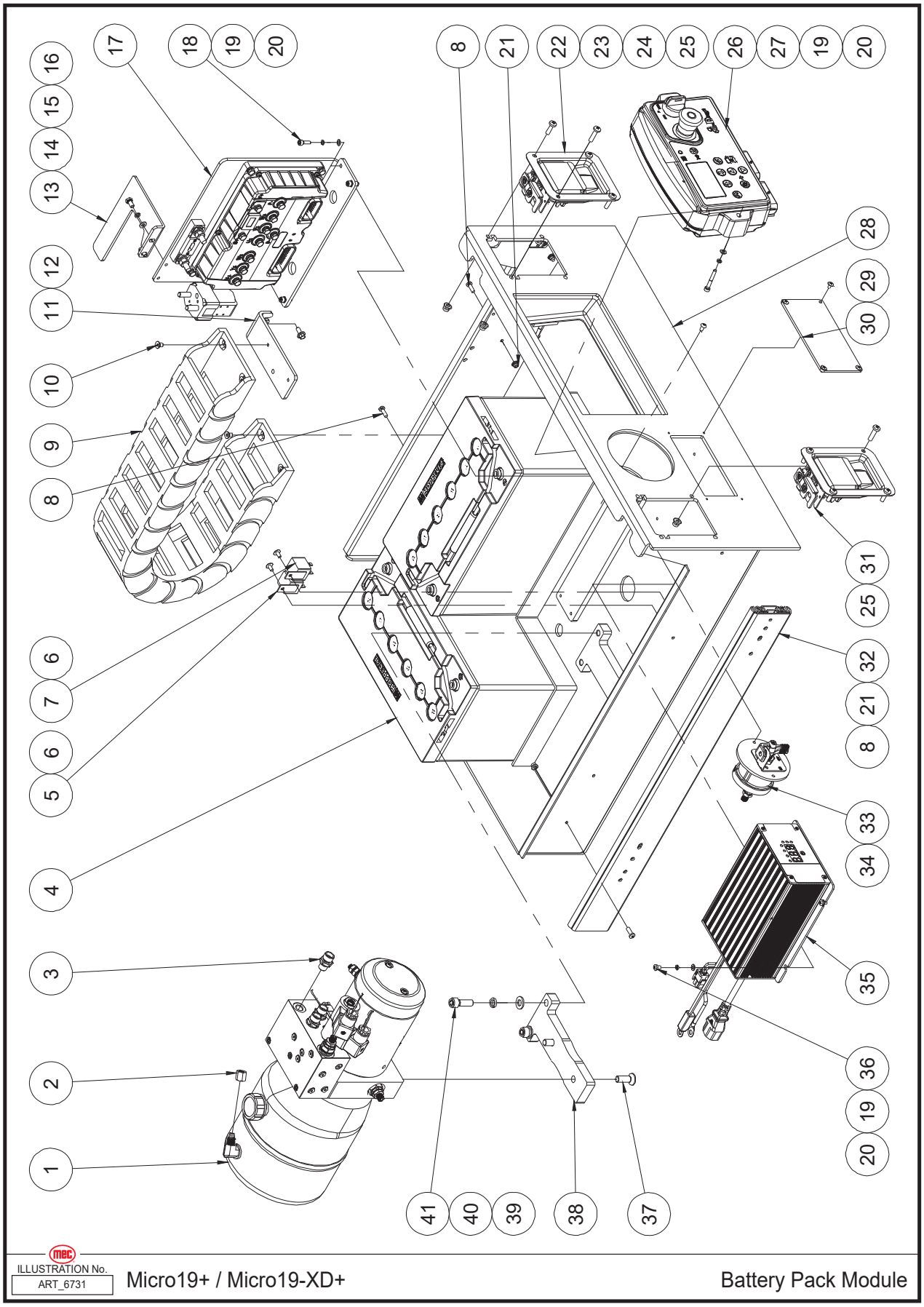

| Item | Part Number | Description | Qty. |
|---|---|---|---|
| 1 | REF | Hydraulic Power Unit (Refer to Page 48) | 1 |
| 2 | 41413 | Nut | 1 |
| 3 | 41296 | Straight Fitting (Adapter) | 3 |
| 4 | 60953 | Battery | 2 |
| 5 | 62747 | Relay | 1 |
| 6 | 53265 | Screw THMS M05-0.80 × 10 ZP | 2 |
| 7 | 41334 | Relay SPDT 24V | 1 |
| 8 | 53351 | Screw PHMS M05-0.80 × 16 ZP | 8 |
| 9 | 45671 | Towline | 1 |
| 10 | 53352 | Screw CSCS M06-1.00 × 10 ZP | 4 |
| 11 | 45672 | Towline Bucket | 1 |
| 12 | 53273 | Screw HHCS M06-1.00 × 14 Serrated Flange ZP | 2 |
| 13 | 46751 | Press Plate | 1 |
| 14 | 53104 | Screw HHCS M06-1.00 × 12 ZP | 2 |
| 15 | 53046 | WSHR M06 Spring Washer ZP | 9 |
| 16 | 50000 | WSHR M06 Standard Flat Washer ZP | 6 |
| 17 | REF | Motor Controller Assembly (Refer to Page 50) | 1 |
| 18 | 50359 | Screw SHCS M05-0.80 × 16 ZP | 4 |
| 19 | 53043 | WSHR M05 Spring Washer ZP | 12 |
| 20 | 53038 | WSHR M05 Standard Flat Washer ZP | 12 |
| 21 | 53281 | Nut NNYL M05-0.80 Flange ZP | 4 |
| 22 | 45277 | Latch, Control-Drawer Lockable | 1 |
| 23 | 53264 | Screw PHMS M06-1.00 × 20 ZP | 4 |
| 24 | 53353 | Screw PHMS M06-1.00 × 25 ZP | 4 |
| 25 | 50568 | Nut NNYL M06-1.00 Flange ZP | 8 |
| 26 | 61005 | Ground Control Assembly (Refer to Page 52) | 1 |
| 27 | 53067 | Screw SHCS M05-0.80 × 40 ZP | 2 |
| 28 | 60954 | Battery Tray Weldment | 1 |
| 29 | 53263 | Screw THMS M04-0.70 × 8 ZP | 4 |
| 30 | 44612 | Charger Cover, Clear | 1 |
| 31 | 43977 | Latch | 1 |
| 32 | 41255 | Glide Track | 2 |
| 33 | 49899 | Main Power Switch, Lockable | 1 |
| 34 | 53318 | Screw PHMS M06-1.00 × 12 ZP | 2 |
| 35 | 42904 | Battery Charger EAYPOWER 24V/15A | 1 |
| 36 | 53222 | Screw PHMS M05-0.80 × 8 ZP | 6 |
| 37 | 53225 | Screw CSCS M10-1.50 × 30 ZP | 2 |
| 38 | 41337 | Fix Panel | 1 |
| 39 | 50002 | WSHR M10 Standard Flat Washer ZP | 2 |
| 40 | 53054 | WSHR M10 Spring Washer ZP | 2 |
| 41 | 50127 | Screw SHCS M10-1.50 × 30 ZP | 2 |

REF - Reference

# Hydraulic Power Unit

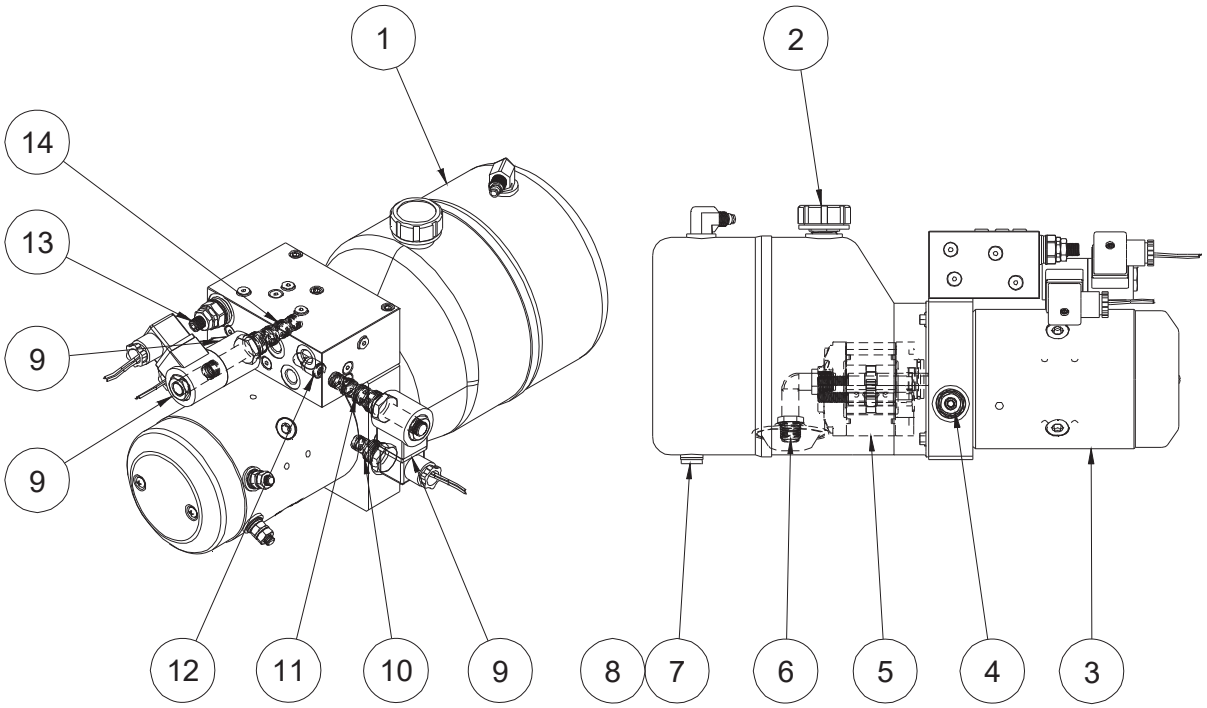


ILLUSTRATION No.
ART_6732

Micro19+ / Micro19-XD+

Hydraulic Power Unit

| Item | Part Number | Description | Qty. |
|---|---|---|---|
| 1 | 42426 | Tank | 1 |
| 2 | 60955 | Tank Cover | 1 |
| 3 | 42424 | Motor | 1 |
| 4 | 43781 | Relief Valve | 1 |
| 5 | 42425 | Pump | 1 |
| 6 | 43772 | Suction Strainer | 1 |
| 7 | 43776 | Drain Plug | 1 |
| 8 | 43777 | WSHR M12 Sealing Washer | 1 |
| 9 | 44011 | Coil 24 Volt | 3 |
| 10 | 44013 | Check Valve | 1 |
| 11 | 45305 | Valve, 2 POS, 4-Way | 1 |
| 12 | 60956 | Pressure Compensation Valve | 1 |
| 13 | 43781 | Relief Valve | 1 |
| 14 | 41246 | Steer Valve Solenoid | 1 |

# Motor Controller Assembly

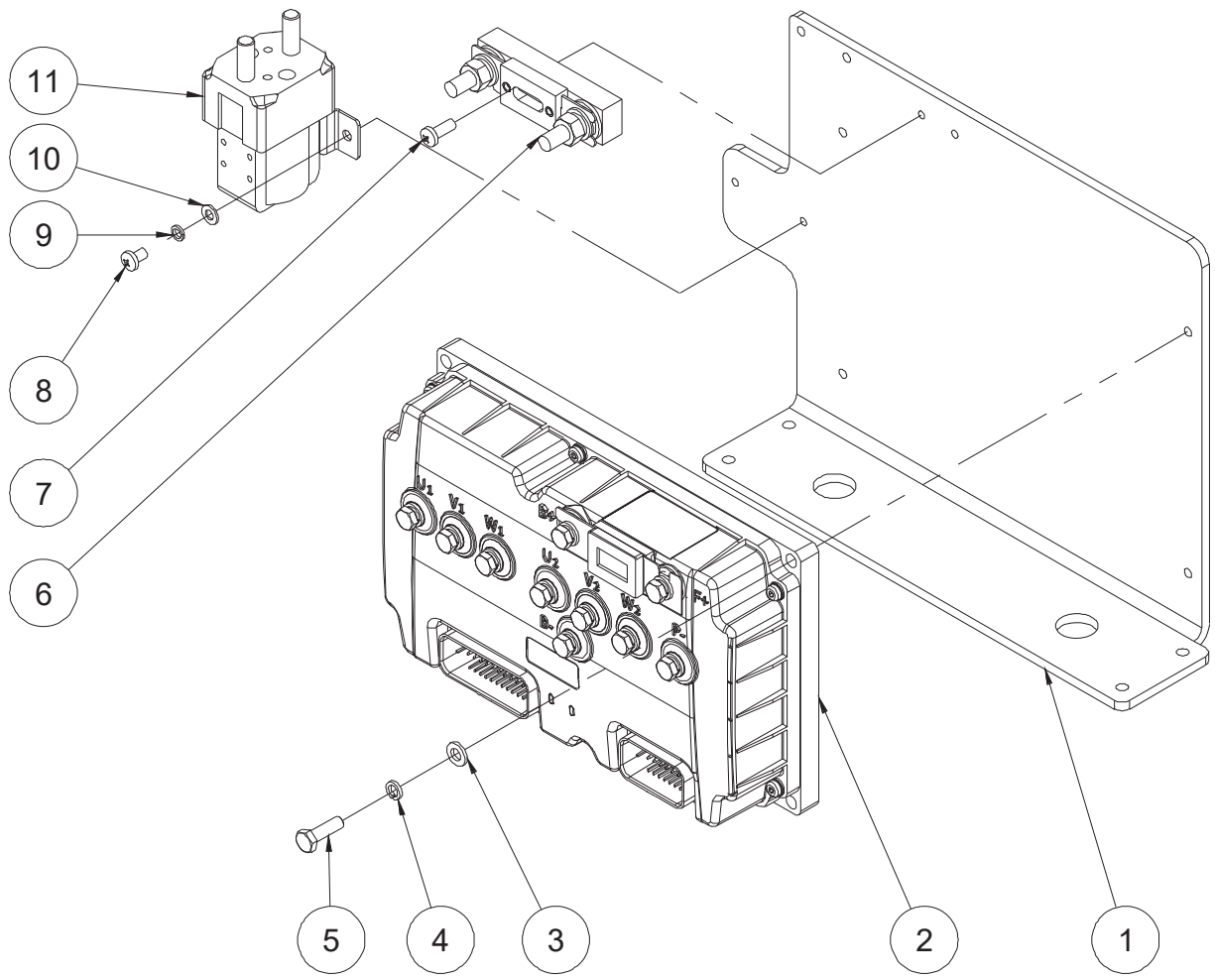


ILLUSTRATION No. ART_6733 Micro19+ / Micro19-XD+ Motor Controller Assembly

| Item | Part Number | Description | Qty. |
|---|---|---|---|
| 1 | 60957 | Mounting Plate | 1 |
| 2 | 60958 | Motor Controller | |
| 3 | 50000 | WSHR M06 Standard Flat Washer ZP | 4 |
| 4 | 53046 | WSHR M06 Spring Washer ZP | 4 |
| 5 | 50028 | Screw HHCS M06-1.00 × 20 ZP | 4 |
| 6 | 42432 | Fuse Assembly | 1 |
| -- | 44014 | Fuse Only 200A | 1 |
| -- | 41092 | Fuse Seat | 1 |
| 7 | 53355 | Screw PHMS M05-0.80 × 14 ZP | 2 |
| 8 | 53222 | Screw PHMS M05-0.80 × 8 ZP | 2 |
| 9 | 53043 | WSHR M05 Spring Washer ZP | 2 |
| 10 | 53038 | WSHR M05 Standard Flat Washer ZP | 2 |
| 11 | 41331 | DC Contactor | 1 |

# Ground Control Assembly

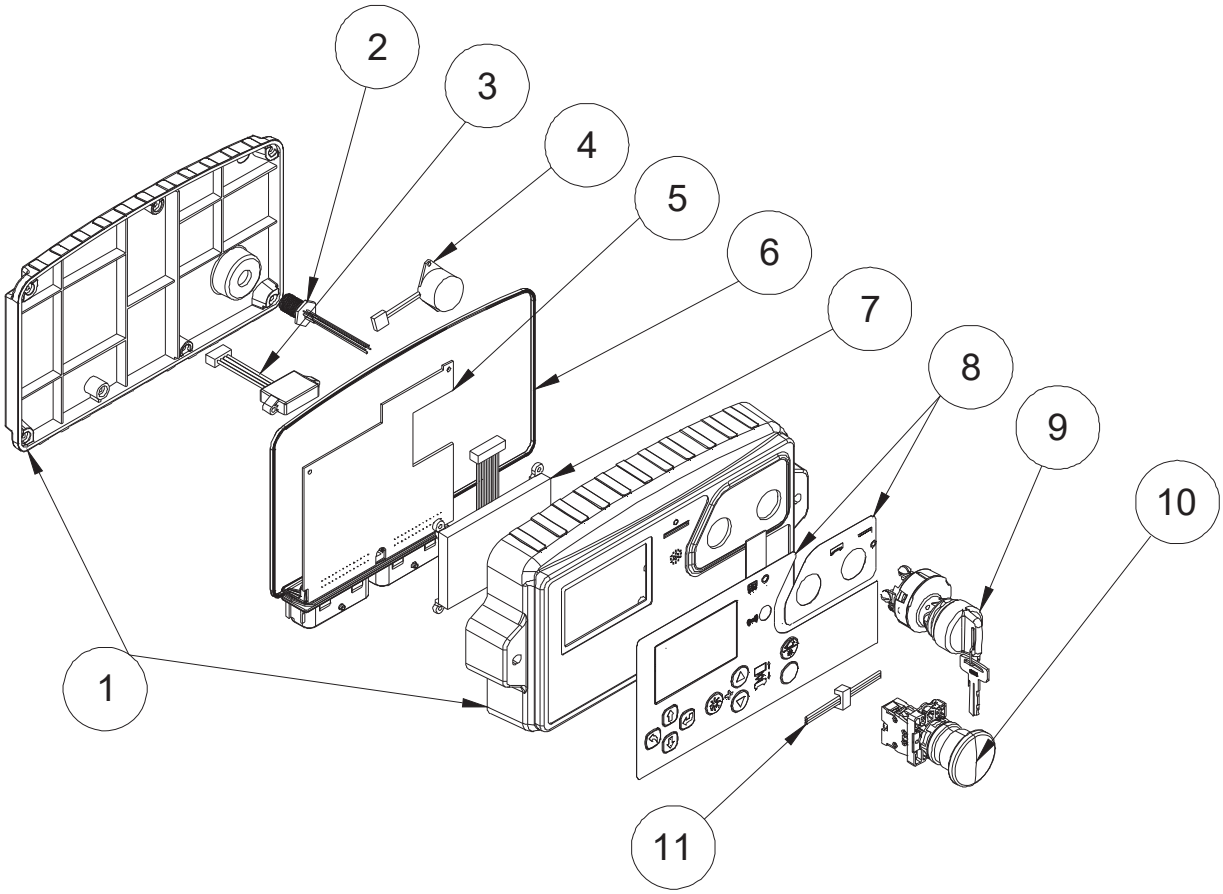


ILLUSTRATION No.
ART_6734

Micro19+ / Micro19-XD+

Ground Control Assembly

| Item | Part Number | Description | Qty. |
|---|---|---|---|
| 1 | 60959 | Shell Components | 1 |
| 2 | 60960 | Display Harness | 1 |
| 3 | 60961 | Tilt Sensor | 1 |
| 4 | 60962 | Alarm | 1 |
| 5 | 60963 | Main Board | 1 |
| 6 | 60964 | Seal Kit | 1 |
| 7 | 60965 | Display | 1 |
| 8 | 60966 | Decal, Ground Control Panel | 1 |
| 9 | 41418 | Key switch (key removable in off position) | 1 |
| | 62781 | Key switch (key removable in all positions) | 1 |
| -- | 41668 | Key | 1 |
| 10 | 41157 | Emergency Stop Switch | 1 |
| -- | 43632 | Red Mushroom Head | 1 |
| -- | 43633 | Base With 1 NC Contact | 1 |
| 11 | 60997 | EMS Switch Harness | 1 |
| **ENTIRE ASSEMBLY: 61005** | | | |

# Ladder and Accessories

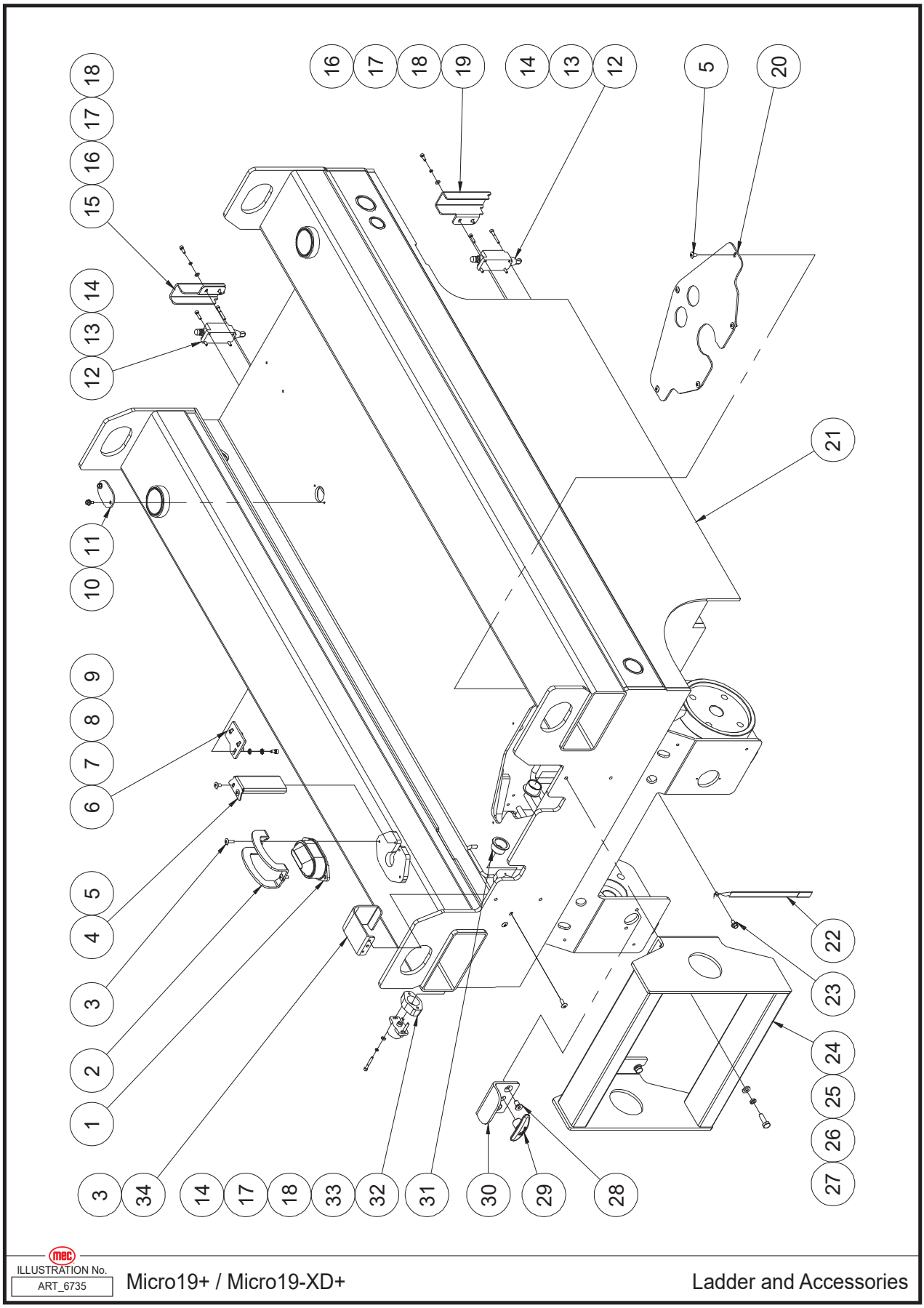

| Item | Part Number | Description | Qty. |
|---|---|---|---|
| 1 | 41310 | Beacon | 1 |
| 2 | 41309 | Cover | 1 |
| 3 | 53223 | Screw THMS M05-0.80 × 16 ZP | 4 |
| 4 | 49140 | Baffle Plate | 1 |
| 5 | 53065 | Screw THMS M05-0.80 × 10 ZP | 7 |
| 6 | 43978 | Lock | 2 |
| 7 | 53173 | Screw SHCS M05-0.80 × 10 ZP | 6 |
| 8 | 53426 | WSHR M05 Serrated Lock Washer External Teeth ZP | 6 |
| 9 | 53425 | WSHR M05 Serrated Lock Washer Internal Teeth ZP | 6 |
| 10 | 53449 | Screw HHCS M05-0.80 × 10 Flange ZP | 2 |
| 11 | 62815 | Cover | 1 |
| 12 | 41197 | Switch, Limit | 2 |
| 13 | 53113 | Screw SHCS M04-0.70 × 16 ZP | 4 |
| 14 | 53065 | Screw SHCS M04-0.70 × 30 ZP | 6 |
| 15 | 41315 | Switch Cover | 1 |
| 16 | 50423 | Screw SHCS M04-0.70 × 12 ZP | 4 |
| 17 | 53062 | WSHR M04 Spring Washer ZP | 6 |
| 18 | 50284 | WSHR M04 Standard Flat Washer ZP | 6 |
| 19 | 41198 | Switch Cover | 1 |
| 20 | 42401 | PHP Cover Plate | 1 |
| 21 | 60998 | Frame Weldment (to SN 20600250, from SN 20700100 to 20700102, from SN 20700253 to 20700427) | 1 |
| 21.B | 61053 | Frame weldment (From SN 20600251 to 20601970, From SN 20602339 to 20602383, from SN 20700103 to 20700252, from SN 20700428 to 20702592, from SN 20703553 to 20703692) | 1 |
| 21.C | 61054 | Frame weldment (From SN 20601971 to 20602130, from SN 20602384, from SN 20702593 to 20703012, from SN 20703693) | 1 |
| 22 | 41003 | Electrical Bar (Static Strap) | 1 |
| 23 | 53260 | Screw HHCS M06-1.00 × 10 Serrated Flange ZP | 1 |
| 24 | 44615 | Ladder (From SN 20600251 to 20601970, From SN 20602339 to 20602383, from SN 20700103 to 20700252,from SN 20700428 to 20702592, from SN 20703553 to 20703692) | 1 |
| 24.B | 61055 | Ladder (From SN 20601971 to 20602130, from SN 20602384, from SN 20702593 to 20703012, from SN 20703693) | 1 |
| 25 | 50001 | WSHR M08 Standard Flat Washer ZP | 4 |
| 26 | 53055 | WSHR M08 Spring Washer ZP | 4 |
| 27 | 50031 | Screw HHCS M08-1.25 × 25 ZP | 4 |
| 28 | 53434 | Screw CSCS M08-1.25 × 16 ZP | 2 |
| 29 | 43367 | Lowering Knob (JB/T274.6 BM5x70) | 1 |

| | | | |
|---|---|---|---|
| 30 | 62824 | Handle Bracket | 1 |
| 31 | 41257 | Bearing | 2 |
| 32 | 41194 | Support Plate, Sensor | 1 |
| 33 | 41195 | Rotary Sensor | 1 |
| 34 | 44616 | Cover | 1 |

# Leak Containment System

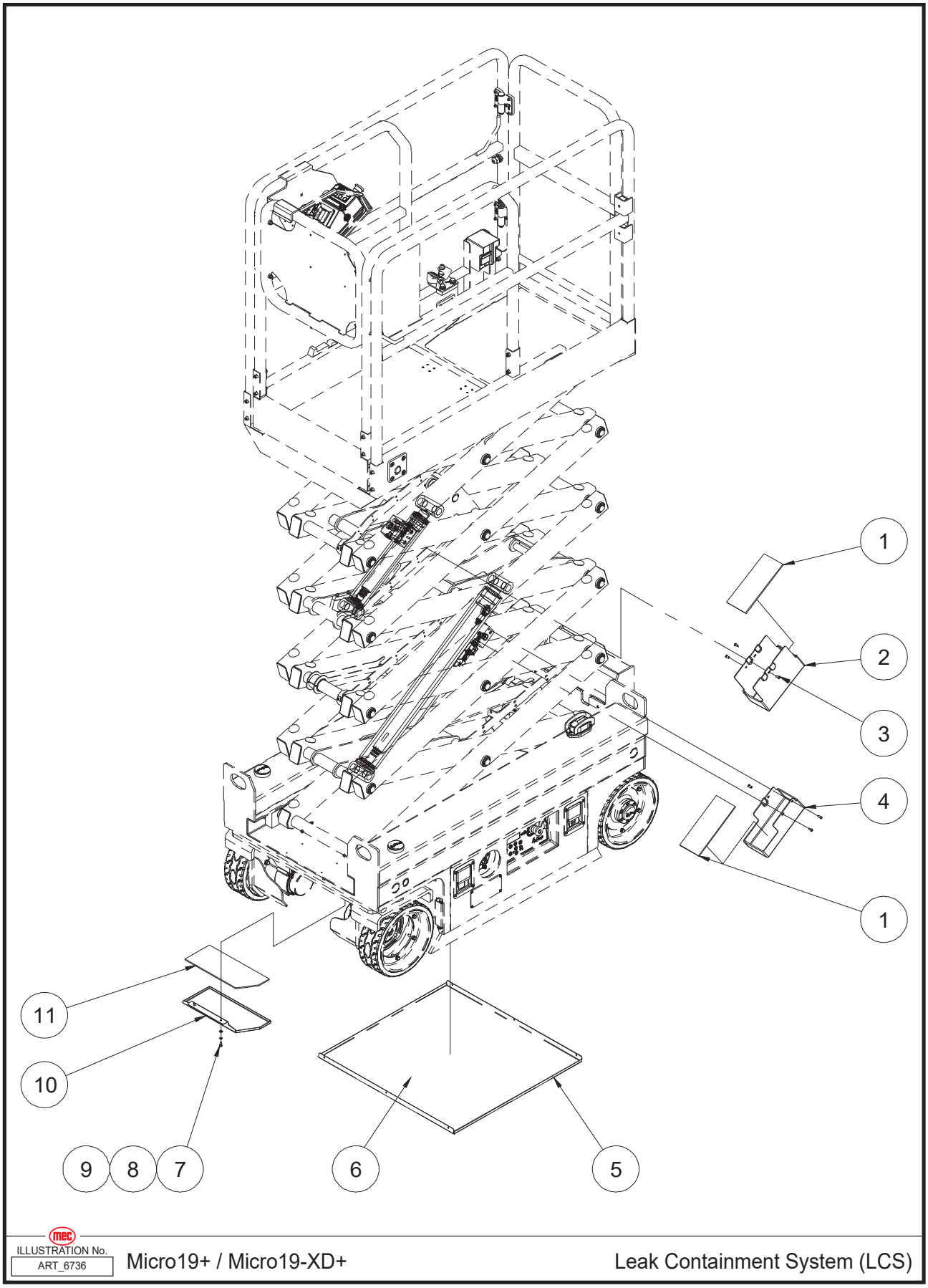

| Item | Part Number | Description | Qty. |
|---|---|---|---|
| 1 | 61056 | Absorbent Pad For LCS Cylinder Guards | 2 |
| 2 | 61057 | Upper Cylinder Guard | 1 |
| 3 | 53026 | Screw BHCS M06-1.00 × 12 ZP | 6 |
| 4 | 61058 | Lower Cylinder Guard | 1 |
| 5 | 60856 | Lcs Tray, Micro-19+ Gen 2 Control Module | 1 |
| 6 | 42935 | Absorbent Pad, Component Tray 27.5” X 27.5” | 1 |
| 7 | 53380 | Screw SHCS M06-1.00 × 12 ZP | 2 |
| 8 | 53046 | WSHR M06 Spring Washer ZP | 2 |
| 9 | 50000 | WSHR M06 Standard Flat Washer ZP | 2 |
| 10 | 61059 | LCS Tray, Steering Cylinder (to SN 20600250, from SN 20700100 to 20700102, from SN 20700253 to 20700427) | 1 |
| 10.B | 61060 | LCS Tray, Steering Cylinder (From SN 20600251, from SN 20700103 to 20700252, from SN 20700428) | 1 |
| 11 | 61061 | Absorbent Pad, Steering Cylinder LCS (to SN 20600250, from SN 20700100 to 20700102, from SN 20700253 to 20700427) | 1 |
| 11.B | 61062 | Absorbent Pad, Steering Cylinder LCS (From SN 20600251, from SN 20700103 to 20700252, from SN 20700428) | 1 |

# Outdoor Limit Switch Assembly

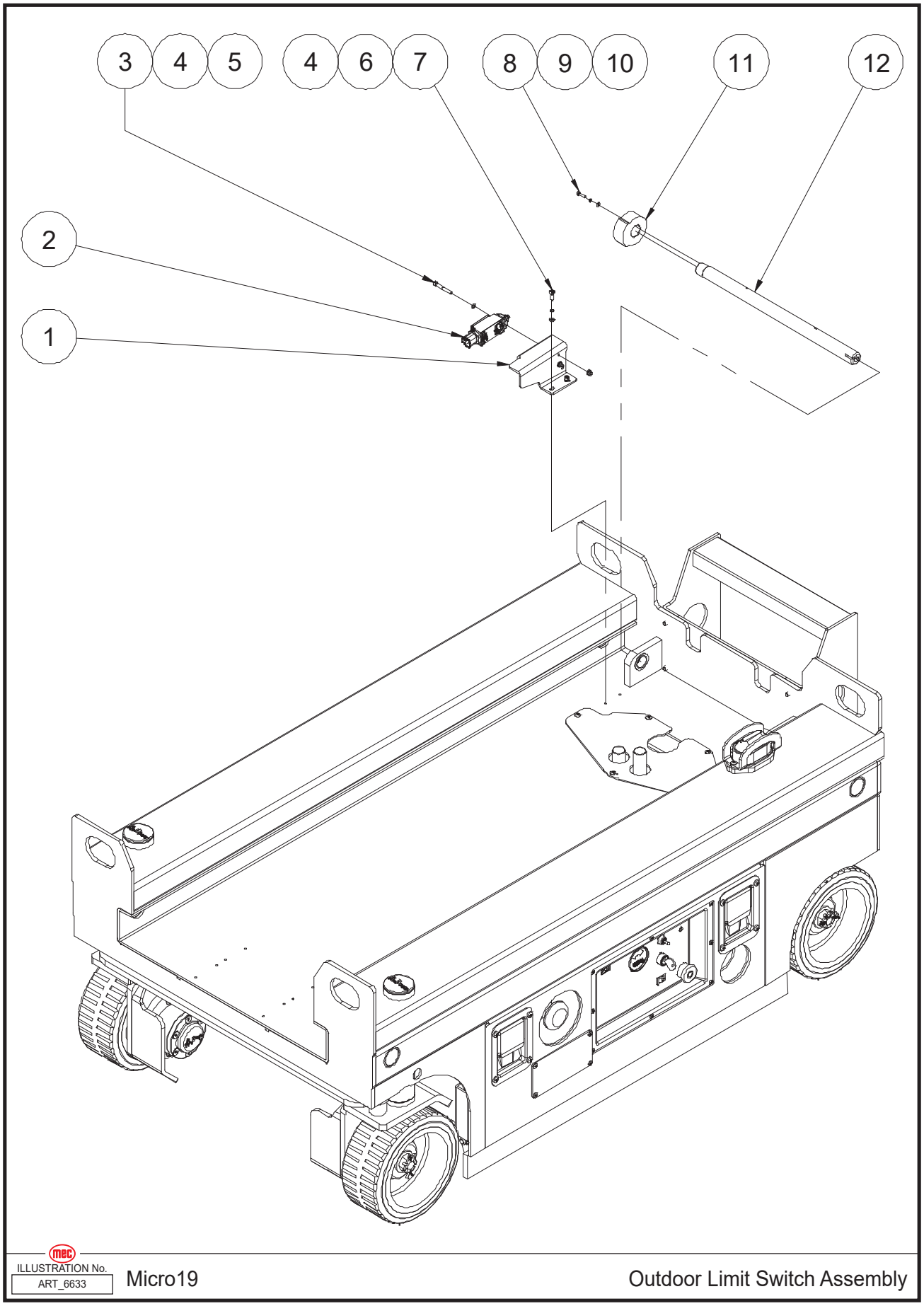

| Item | Part Number | Description | Qty. |
|---|---|---|---|
| 1 | 48649 | Bracket, Outdoor Limit Switch | 1 |
| 2 | 46242 | Limit Switch | 1 |
| 3 | 53067 | Screw SHCS M05-0.80 × 40 ZP | 2 |
| 4 | 53038 | WSHR M05 Standard Flat Washer ZP | 4 |
| 5 | 53281 | Nut NNYL M05-0.80 Flange ZP | 2 |
| 6 | 53043 | WSHR M05 Spring Washer ZP | 2 |
| 7 | 50359 | Screw SHCS M05-0.80 × 16 ZP | 2 |
| 8 | 53113 | Screw SHCS M04-0.70 × 16 ZP | 2 |
| 9 | 53062 | WSHR M04 Spring Washer ZP | 2 |
| 10 | 50284 | WSHR M04 Standard Flat Washer ZP | 2 |
| 11 | 49609 | Limit Sleeve, Outdoor Switch | 1 |
| 12 | 49614 | Pin, Outdoor Limit Switch | 1 |

# Scissor Assembly

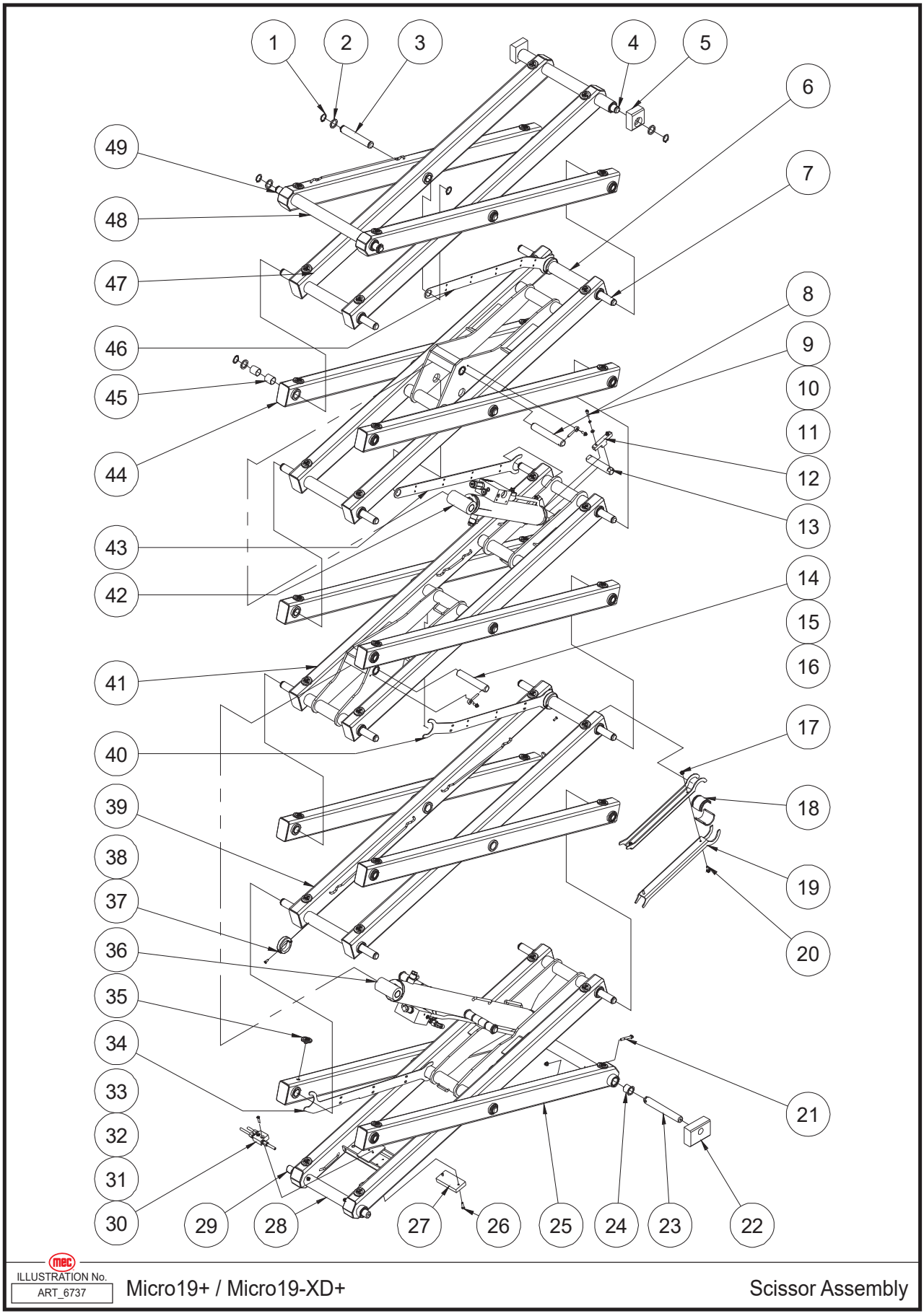

| Item | Part Number | Description | Qty. |
|---|---|---|---|
| 1 | 42437 | Circlips | 36 |
| 2 | 41354 | Washer | 34 |
| 3 | 41349 | Axle | 6 |
| 4 | 41576 | Axle, Scissor Stack, Upper | 1 |
| 5 | 41256 | Platform Slider (Micro19+) | 2 |
| | 46596 | Platform Slider (Micro19-XD+) | 2 |
| 6 | 61063 | Inner Arm 4 | 1 |
| 7 | 41577 | Axle, Scissor Stack, Lower | 10 |
| 8 | 42454 | Cylinder Axle 2 | 1 |
| 9 | 53123 | Screw SHCS M06-1.00 × 25 ZP | 4 |
| 10 | 53046 | WSHR M06 Spring Washer ZP | 4 |
| 11 | 50000 | WSHR M06 Standard Flat Washer ZP | 4 |
| 12 | 42439 | Lock Plate | 2 |
| 13 | 42440 | Cylinder Axle 3 | 1 |
| 14 | 41345 | Cylinder Axle | 2 |
| 15 | 42449 | Pin, Retainer 6x45 | 3 |
| 16 | 53256 | Screw HHCS M06-1.00 × 16 Serrated Flange ZP | 3 |
| 17 | 50568 | Nut NNYL M06-1.00 Flange ZP | 6 |
| 18 | 41262 | Safety Holder | 2 |
| 19 | 41263 | Safety Arm | 2 |
| 20 | 53255 | Screw HHCS M06-1.00 × 20 Serrated Flange ZP | 2 |
| 21 | 53357 | Screw HHCS M06-1.00 × 55 Flange ZP | 4 |
| 22 | 44801 | Chassis Slider | 2 |
| 23 | 41338 | Top Slider Axle | 2 |
| 24 | 42446 | Bearing | 28 |
| 25 | 44802 | Outer Arm 1 | 1 |
| 26 | 50386 | Screw CSCS M06-1.00 × 25 ZP | 4 |
| 27 | 41350 | Pothole Pressboard | 1 |
| 28 | 44803 | Inner Arm 1 | 1 |
| 29 | 41258 | Fastness Base Axle | 1 |
| 30 | 41112 | Hydraulic Hoses Manifolds | 1 |
| 31 | 43601 | Hose (To Hydraulic Tank) | 1 |
| 32 | 44015 | Hose , Return, To Tank | 1 |
| 33 | 43997 | Hose (To Lower Lift Cylinder) | 1 |
| 34 | 61064 | Cable Bridge | 1 |
| 35 | 41114 | Block | 40 |
| 36 | REF | Lower Lift Cylinder Assembly (Refer to Page 79) | 1 |
| 37 | 41691 | Collar | 3 |
| 38 | 53269 | Screw CSCS M05-0.80 × 16 ZP | 3 |
| 39 | 44804 | Inner Arm 2 | 1 |
| 40 | 44805 | Cable Bridge | 1 |
| 41 | 44806 | Inner Arm 3 | 1 |
| 42 | REF | Upper Lift Cylinder Assembly (Refer to Page 81) | 1 |
| 43 | 42438 | Cable Bridge | 1 |
| 44 | 44807 | Outer Arm 2 | 6 |

| | | | |
|---|---|---|---|
| 45 | 42088 | Bearing | 64 |
| 46 | 43744 | Cable Bridge | 1 |
| 47 | 44808 | Inner Arm 5 | 1 |
| 48 | 44808 | Outer Arm 5 | 1 |
| 49 | 42457 | Axle | 1 |

REF - Reference

THIS PAGE HAS BEEN INTENTIONALLY LEFT BLANK.

# Main Platform Assembly

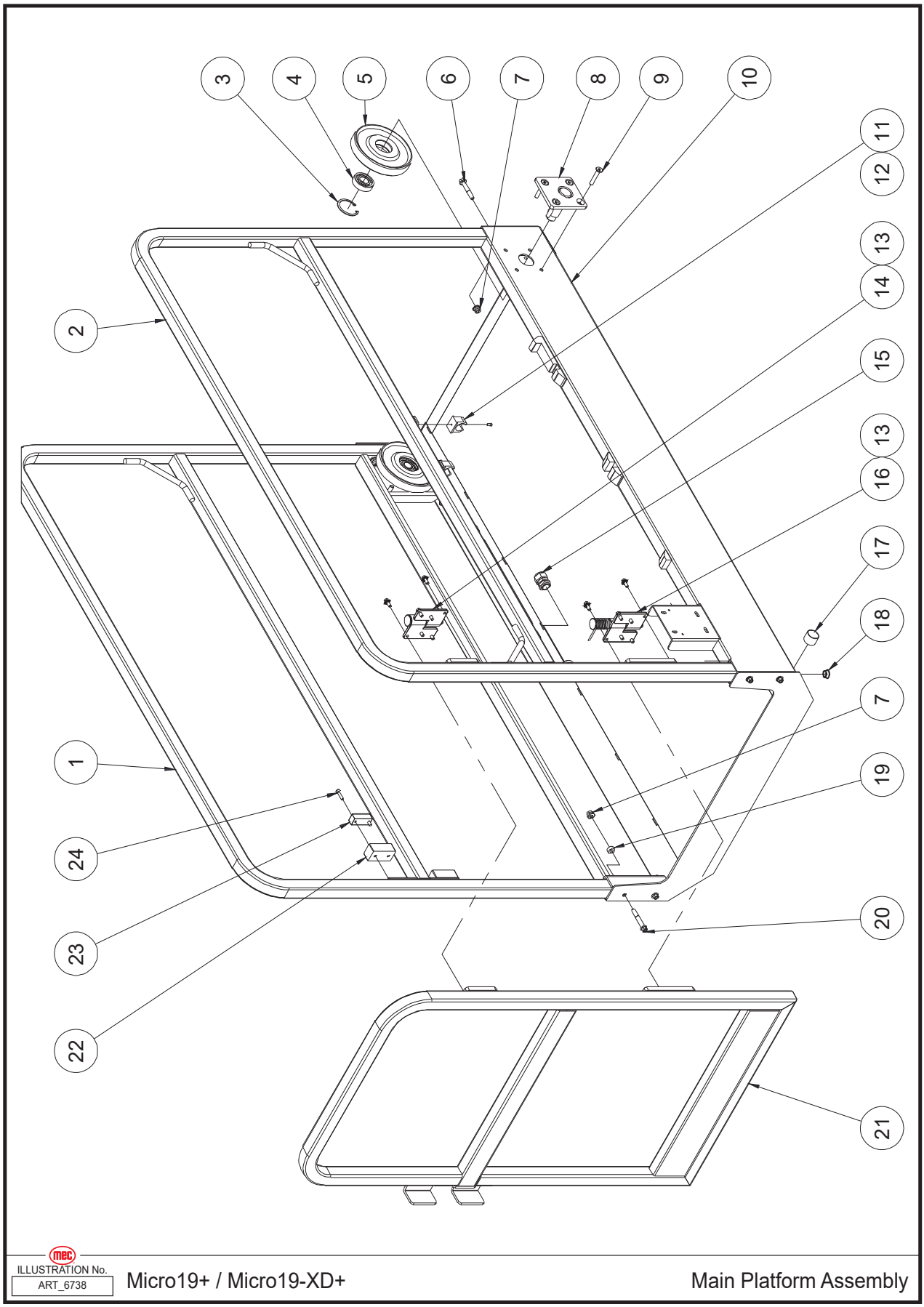

| Item | Part Number | Description | Qty. |
|---|---|---|---|
| 1 | 61065 | Left Main Rail | 1 |
| 2 | 44811 | Right Main Rail | 1 |
| 3 | 43618 | Circlips | 2 |
| 4 | 41131 | Bearing | 2 |
| 5 | 41269 | Roller | 2 |
| 6 | 53358 | Screw HHCS M08-1.25 × 50 Flange ZP | 4 |
| 7 | 50313 | Nut NNYL M08-1.25 Flange ZP | 8 |
| 8 | 41270 | Roller Installation | 2 |
| 9 | 53275 | Screw CSCS M08-1.25 × 45 ZP | 8 |
| 10 | 42461 | Platform Deck Weldment | 1 |
| 11 | 41134 | Clip 24 | 2 |
| 12 | 53276 | Screw PHMS M04-0.70 × 8 ZP | 2 |
| 13 | 53273 | Screw HHCS M06-1.00 × 14 Serrated Flange ZP | 12 |
| 14 | 41127 | Hinge A | 1 |
| 15 | 41273 | Waterproof Joint | 1 |
| 16 | 41128 | Hinge B | 1 |
| 17 | 41046 | Bearing | 2 |
| 18 | 41275 | Sheath | 1 |
| 19 | 42462 | Washer | 4 |
| 20 | 53359 | Screw HHCS M08-1.25 × 55 Flange ZP | 4 |
| 21 | 61066 | Entry Gate | 1 |
| 22 | 62764 | Pothole Pusher | 2 |
| 23 | 62776 | Magnet | 2 |
| 24 | 50386 | Screw CSCS M05-0.80 × 25 ZP, Phillips | 4 |

# Platform Extension Assembly (Micro19+)

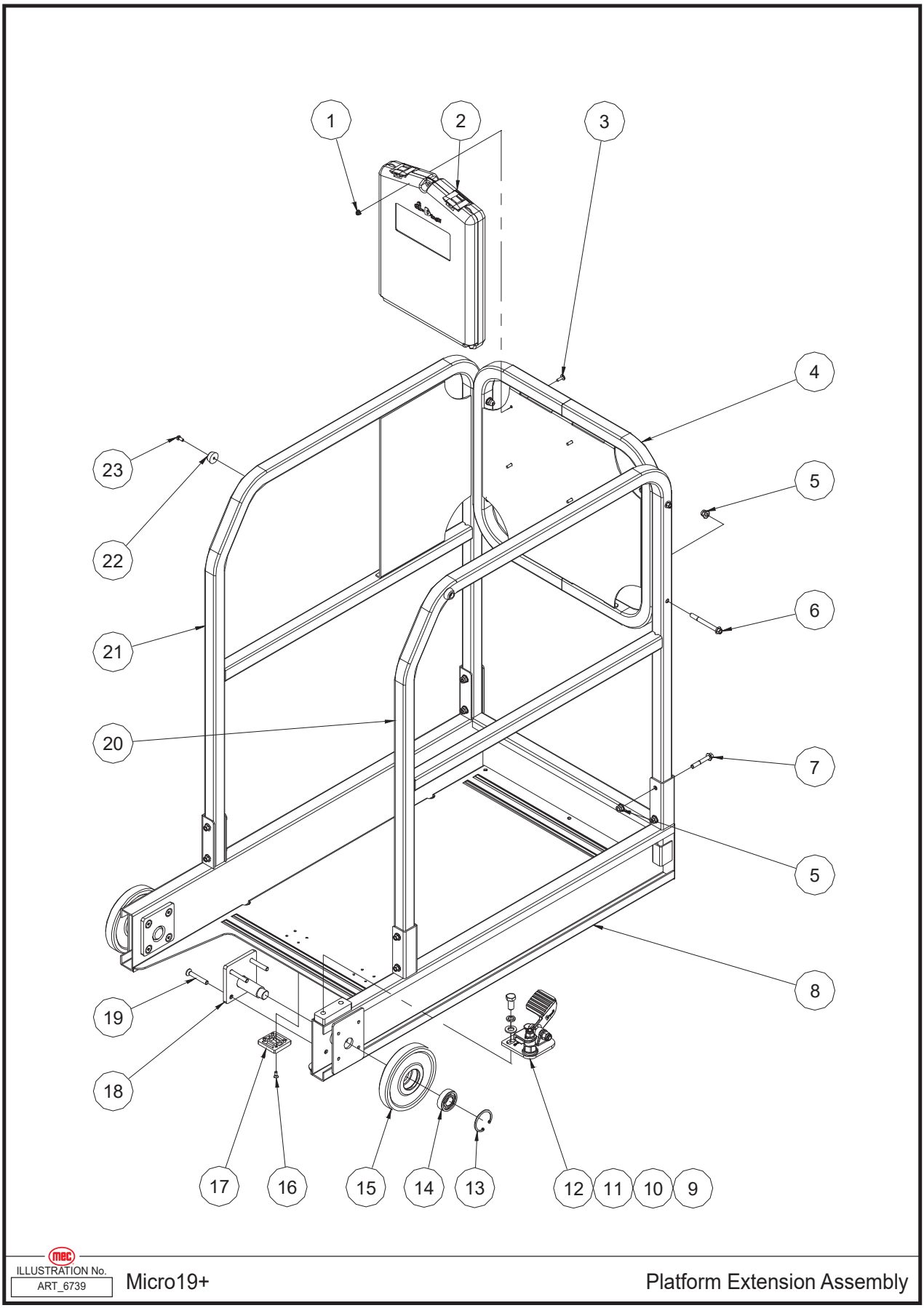

| Item | Part Number | Description | Qty. |
|---|---|---|---|
| 1 | 53281 | Nut NNYL M05-0.80 Flange | 4 |
| 2 | 8909 | Manual Box | 1 |
| 3 | 53223 | Screw THMS M05-0.80 × 16 | 4 |
| 4 | 61067 | Front Rail | 1 |
| 5 | 50313 | Nut NNYL M08-1.25 Flange ZP | 12 |
| 6 | 53409 | Screw HHCS M08-1.25 × 80 Flange ZP | 4 |
| 7 | 53358 | Screw HHCS M08-1.25 × 50 Flange ZP | 8 |
| 8 | 44586 | Extension Deck Weldment | 1 |
| 9 | 50038 | Screw HHCS M12-1.75 × 25 ZP | 2 |
| 10 | 53148 | WSHR M12 Spring Washer ZP | 2 |
| 11 | 50003 | WSHR M12 Standard Flat Washer ZP | 2 |
| 12 | 44599 | Platform Locking Device Assembly | 1 |
| 13 | 43618 | Circlips | 2 |
| 14 | 41131 | Bearing | 2 |
| 15 | 41141 | Roller 2 | 2 |
| 16 | 53480 | Screw CSCS M05-0.80 × 14 ZP | 8 |
| 17 | 41284 | Slide Pad | 2 |
| 18 | 41270 | Roller Installation | 2 |
| 19 | 53280 | Screw CSCS M08-1.25 × 55 ZP | 8 |
| 20 | 44812 | Right Extension Rail | 1 |
| 21 | 44800 | Left Extension Rail | 1 |
| 22 | 41120 | Rubber Gasket | 2 |
| 23 | 53378 | Screw PHMS M05-0.80 × 12 ZP | 2 |

# Platform Extension Assembly (Micro19-XD+)

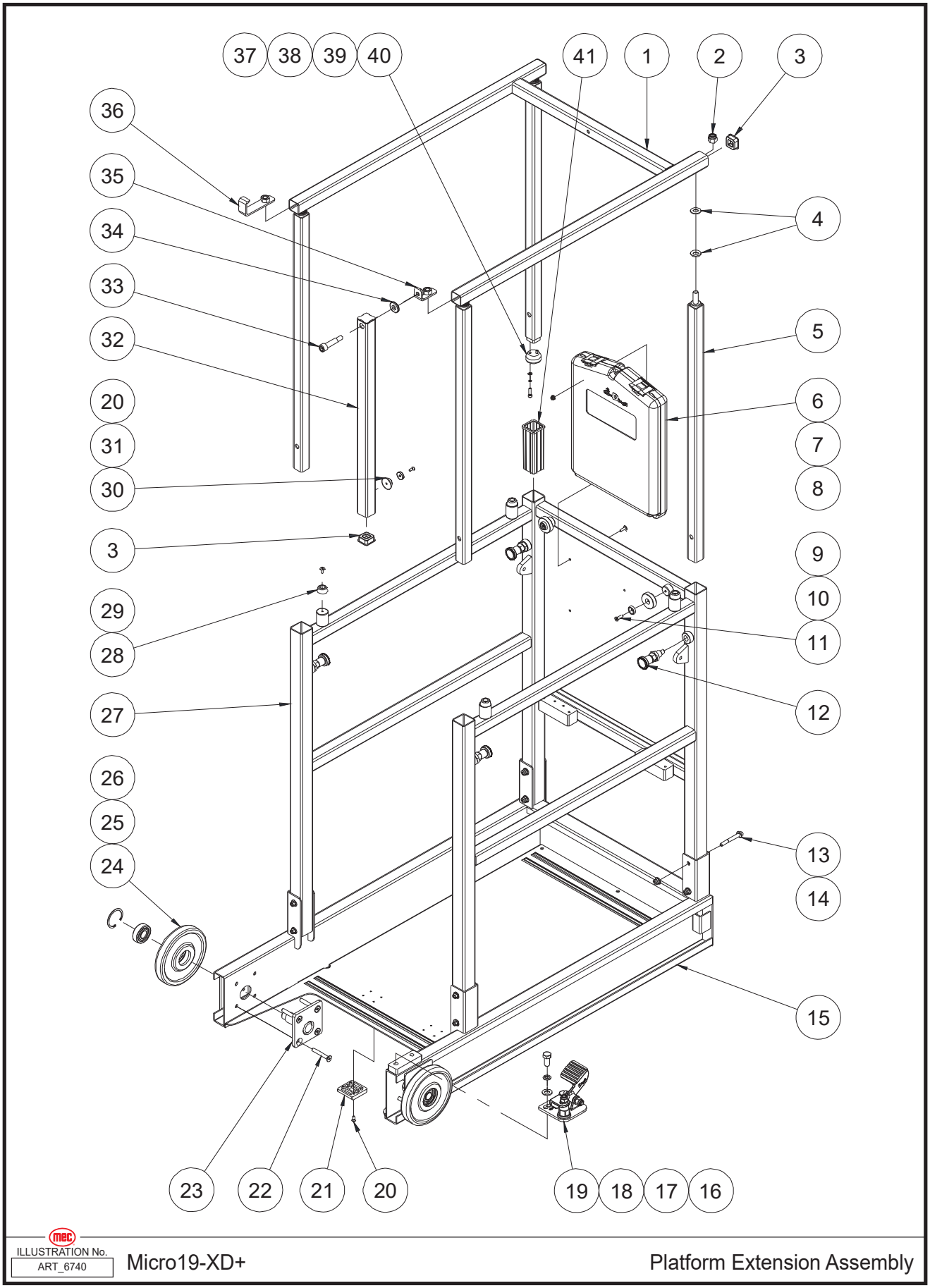

| Item | Part Number | Description | Qty. |
|---|---|---|---|
| 1 | 44140 | Upper Extension Rail | 1 |
| 2 | 50050 | Nut NNYL M12-1.75 ZP | 2 |
| 3 | 49209 | Plug | 3 |
| 4 | 49210 | Disc Spring | 8 |
| 5 | 45943 | Telescopic Rail | 4 |
| 6 | 8909 | Manual Box | 1 |
| 7 | 53223 | Screw THMS M05-0.80 × 16 ZP | 4 |
| 8 | 53281 | Nut NNYL M05-0.80 Flange ZP | 4 |
| 9 | 45928 | Magnet | 2 |
| 10 | 49213 | Washer | 2 |
| 11 | 50561 | Screw CSCS M06-1.00 × 20 ZP | 2 |
| 12 | 44016 | Lock Pin, Pull Type | 4 |
| 13 | 53359 | Screw HHCS M08-1.25 × 55 Flange ZP | 8 |
| 14 | 50313 | Nut NNYL M08-1.25 Flange ZP | 8 |
| 15 | 45944 | Extension Deck Weldment | 1 |
| 16 | 50003 | WSHR M12 Standard Flat Washer ZP | 2 |
| 17 | 53148 | WSHR M12 Spring Washer ZP | 2 |
| 18 | 50038 | Screw HHCS M12-1.75 × 25 ZP | 2 |
| 19 | 44599 | Platform Locking Device Assembly | 1 |
| 20 | 53480 | Screw CSCS M05-0.80 × 14 ZP | 9 |
| 21 | 41284 | Slide Pad | 2 |
| 22 | 53280 | Screw CSCS M08-1.25 × 55 ZP | 8 |
| 23 | 41270 | Roller Installation | 2 |
| 24 | 41141 | Roller 2 | 2 |
| 25 | 41131 | Bearing | 2 |
| 26 | 43618 | Circlips | 2 |
| 27 | 45945 | Lower Extension Rail | 1 |
| 28 | 41120 | Rubber Gasket | 5 |
| 29 | 53224 | Screw THMS M05-0.80 × 12 ZP | 5 |
| 30 | 44239 | Deck Guard Arm Magnet Bushing | 1 |
| 31 | 49221 | Magnet 2 | 1 |
| 32 | 44244 | Deck Guard Arm Weldment | 1 |
| 33 | 49223 | Pin | 1 |
| 34 | 44823 | Washer | 1 |
| 35 | 44237 | Deck Guard Hinge Weldment | 1 |
| 36 | 44227 | Deck Guard Latch Rest Weldment | 1 |
| 37 | 53150 | Screw SHCS M05-0.80 × 20 ZP | 8 |
| 38 | 53043 | WSHR M05 Spring Washer ZP | 8 |
| 39 | 53038 | WSHR M05 Standard Flat Washer ZP | 8 |
| 40 | 49220 | Bottom Guide Block | 4 |
| 41 | 49218 | Upper Guide Sleeve | 4 |

# Pallet Installation (Micro19-XD+)

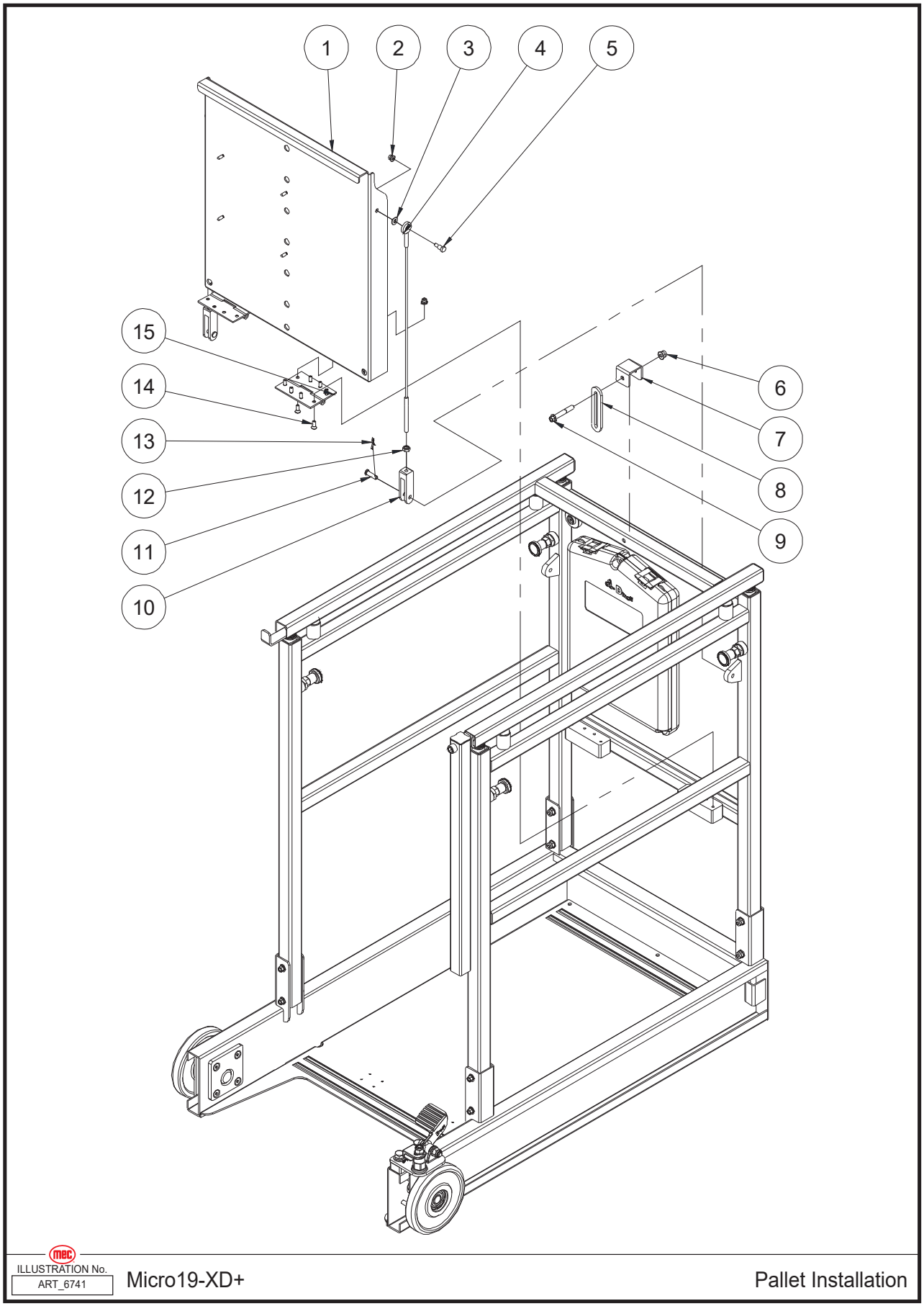

| Item | Part Number | Description | Qty. |
|---|---|---|---|
| 1 | 44163 | Step Weldment 1.1M | 1 |
| 2 | 50568 | Nut NNYL M06-1.00 Flange ZP | 10 |
| 3 | 50001 | WSHR M08 Standard Flat Washer ZP | 2 |
| 4 | 46771 | Wire Rope | 2 |
| 5 | 46772 | Pin | 2 |
| 6 | 50313 | Nut NNYL M08-1.25 Flange ZP | 1 |
| 7 | 44223 | Step Inhibitor | 1 |
| 8 | 53359 | Screw HHCS M08-1.25 × 55 Flange ZP | 1 |
| 9 | 49927 | Adjustment Joint | 2 |
| 10 | 49226 | Pin | 2 |
| 11 | 53014 | Nut NHEX M08-1.25 ZP | 2 |
| 12 | 46541 | Cotter Pin | 2 |
| 13 | 53226 | Screw CSCS M06-1.00 × 16 ZP | 16 |
| 14 | 49228 | Hinge | 2 |

# Platform Locking Device Assembly

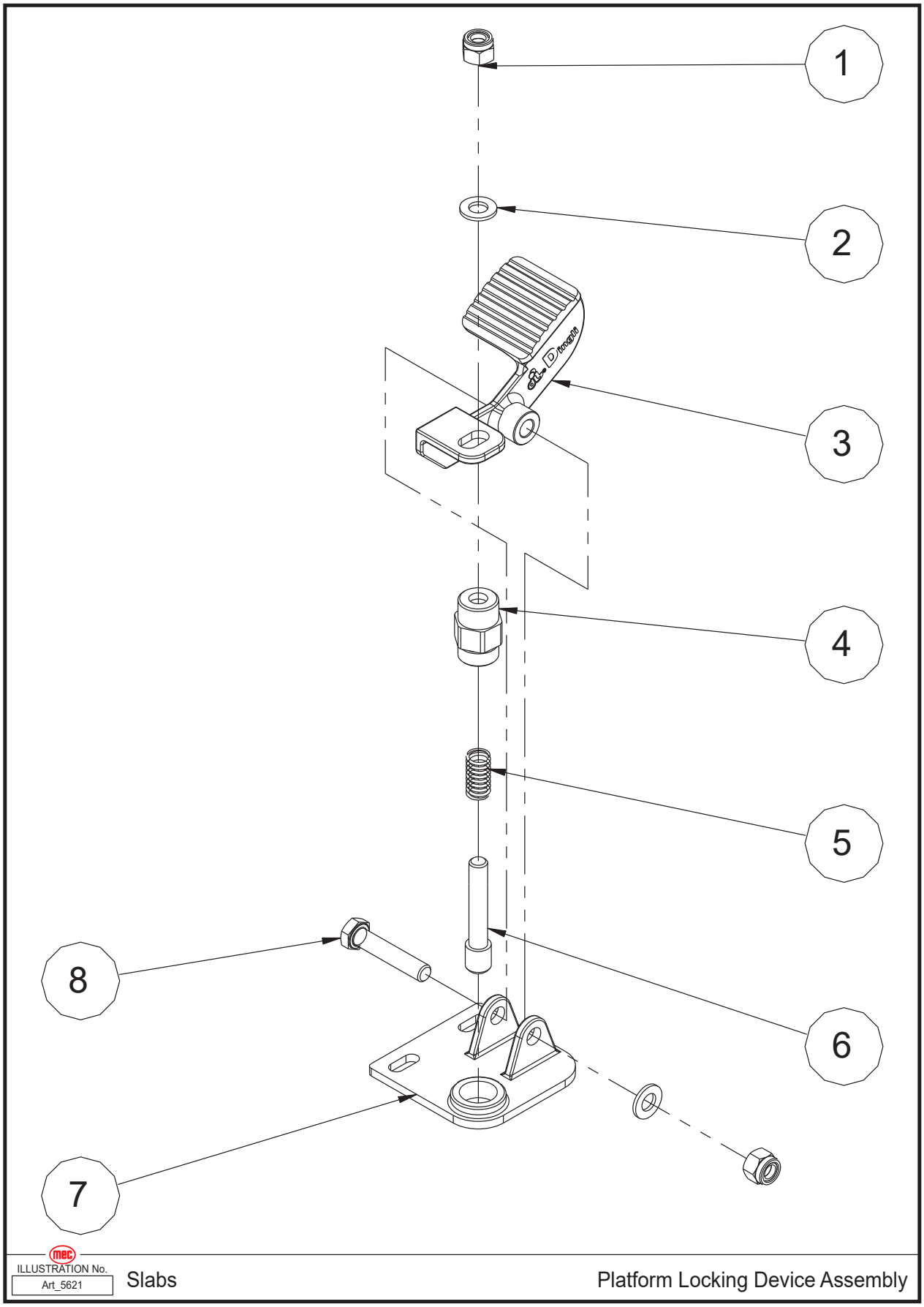

| Item | Part Number | Description | Qty. |
|---|---|---|---|
| 1 | 50049 | Nut NNYL M10-1.50 ZP | 2 |
| 2 | 50002 | WSHR M10 Standard Flat Washer ZP | 2 |
| 3 | 41143 | Foot Pedal | 1 |
| 4 | 41144 | Lock Pin Housing | 1 |
| 5 | 41145 | Spring | 1 |
| 6 | 41146 | Lock Pin | 1 |
| 7 | 44767 | Bracket | 1 |
| 8 | 50020 | Screw HHCS M10-1.50 × 50 ZP | 1 |

# Platform Control Assembly

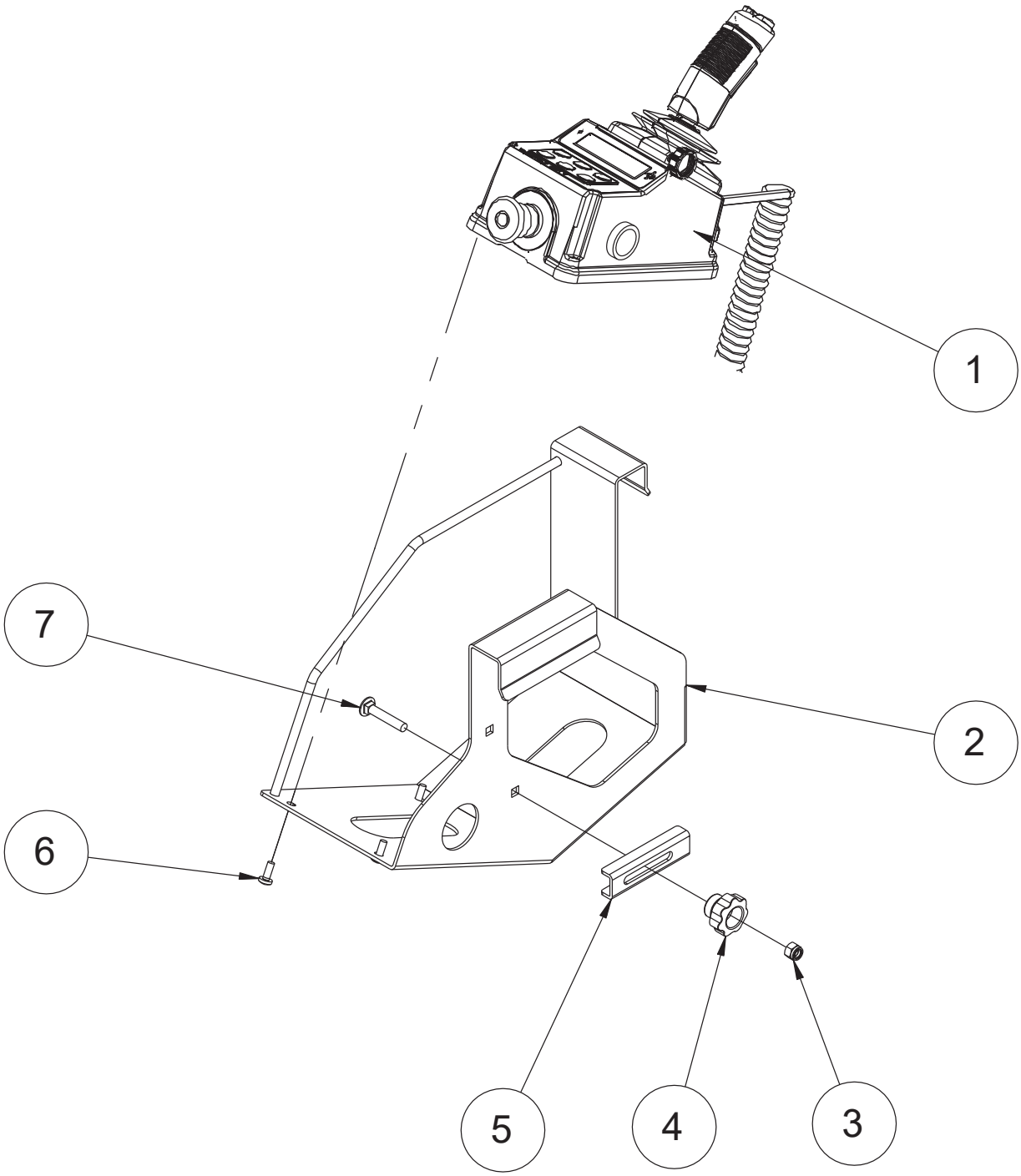


ILLUSTRATION No. ART_6743 Micro19+ / Micro19-XD+ Platform Control Assembly

| Item | Part Number | Description | Qty. |
|---|---|---|---|
| 1 | 49874 | P750 Upper Control Box Assembly, Ac+ Slabs | 1 |
| 2 | 42499 | Platform Control Box Mount Bracket | 1 |
| 3 | 50048 | Nut NNYL M08-1.25 ZP | 1 |
| 4 | 42501 | Handle | 1 |
| 5 | 42500 | Fixed Plate | 1 |
| 6 | 53231 | Screw PHMS M06-1.00 × 16 ZP | 4 |
| 7 | 53248 | Screw CARB M08-1.25 × 45 ZP | 1 |

# Platform Control Box Assembly

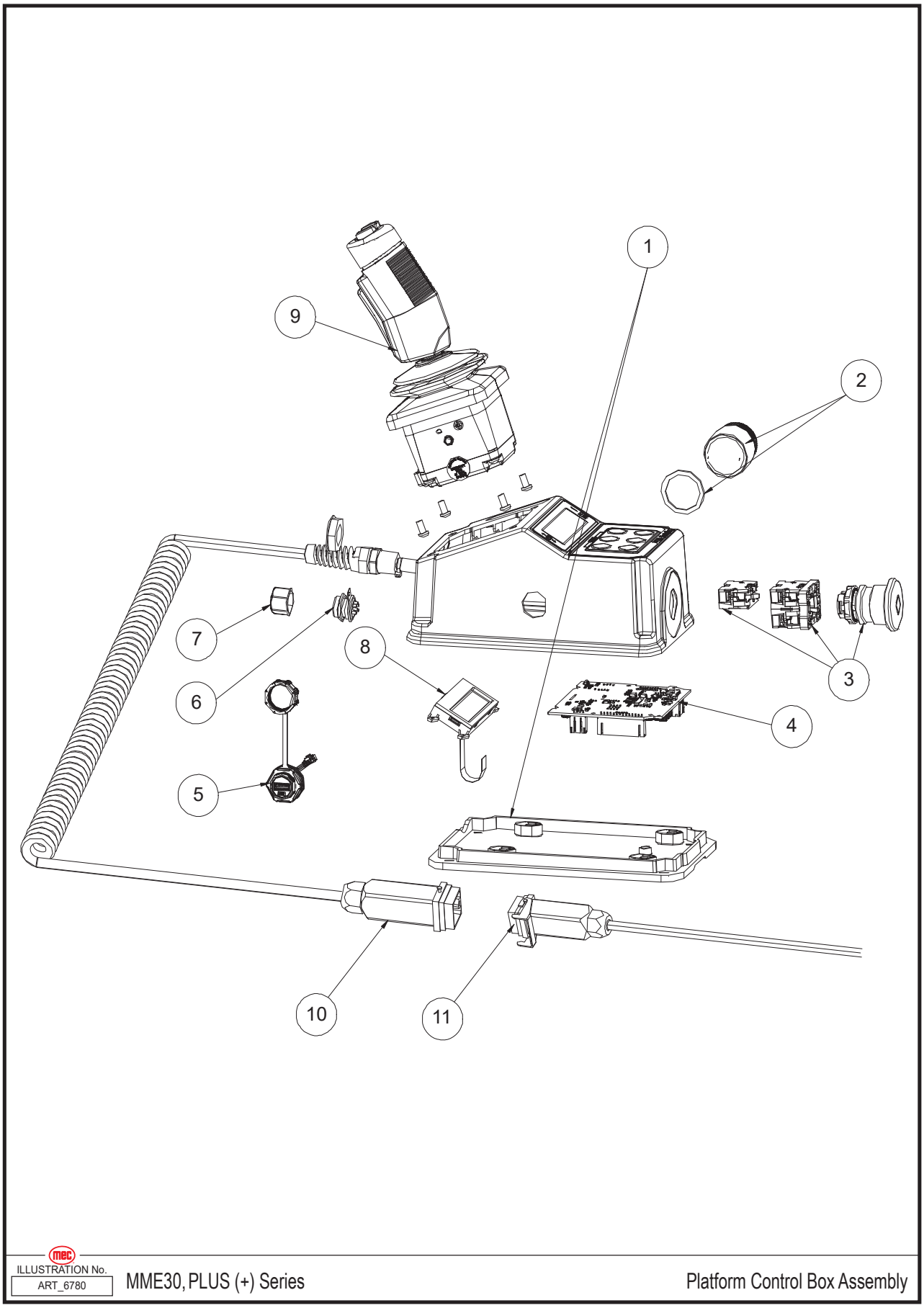

| Item | Part Number | Description | Qty. |
|---|---|---|---|
| 1 | 62752 | Shell Components | 1 |
| -- | 62736 | Display Cover | 1 |
| -- | 49772 | Decal, P750 LED Display | 1 |
| -- | 49773 | Decal, P750 Button Overlay | 1 |
| 2 | 41568 | Alarm | 1 |
| 3 | 62746 | Emergency Stop Switch | 1 |
| 4 | 62730 | PCU Main Board | 1 |
| 5 | 62720 | USB Cable | 1 |
| 6 | 62749 | Connector | 1 |
| 7 | 44771 | Connector Cap | 1 |
| 8 | 62803 | Display | 1 |
| 9 | 41149 | Joystick | 1 |
| -- | 43621 | Function Enable Switch | 1 |
| -- | 41150 | Dustproof Cover | 1 |
| -- | 43622 | Joystick Steer Switch | 1 |
| -- | 43623 | Switch Boot | 1 |
| 10 | 62719 | Coil Cord | 1 |
| -- | 44258 | Female Plug Outer Shell, Sibas Orange | 1 |
| -- | 44259 | Female Plug Plastic Body, Sibas Orange | 1 |
| -- | 44255 | Terminal, Female Sibas, For Orange Connectors | 7 |
| -- | 43627 | Cable Gland | 1 |
| 11 | REF | PCU Harness (Refer to Page 85) | 1 |
| -- | 44257 | Male Plug Outer Shell, Sibas Orange | 1 |
| -- | 44256 | Male Plug Plastic Body, Sibas Orange | 1 |
| -- | 44254 | Terminal, Male Sibas, For Orange Connectors | 7 |
| -- | 43627 | Cable Gland | 1 |

# Lower Lift Cylinder Assembly

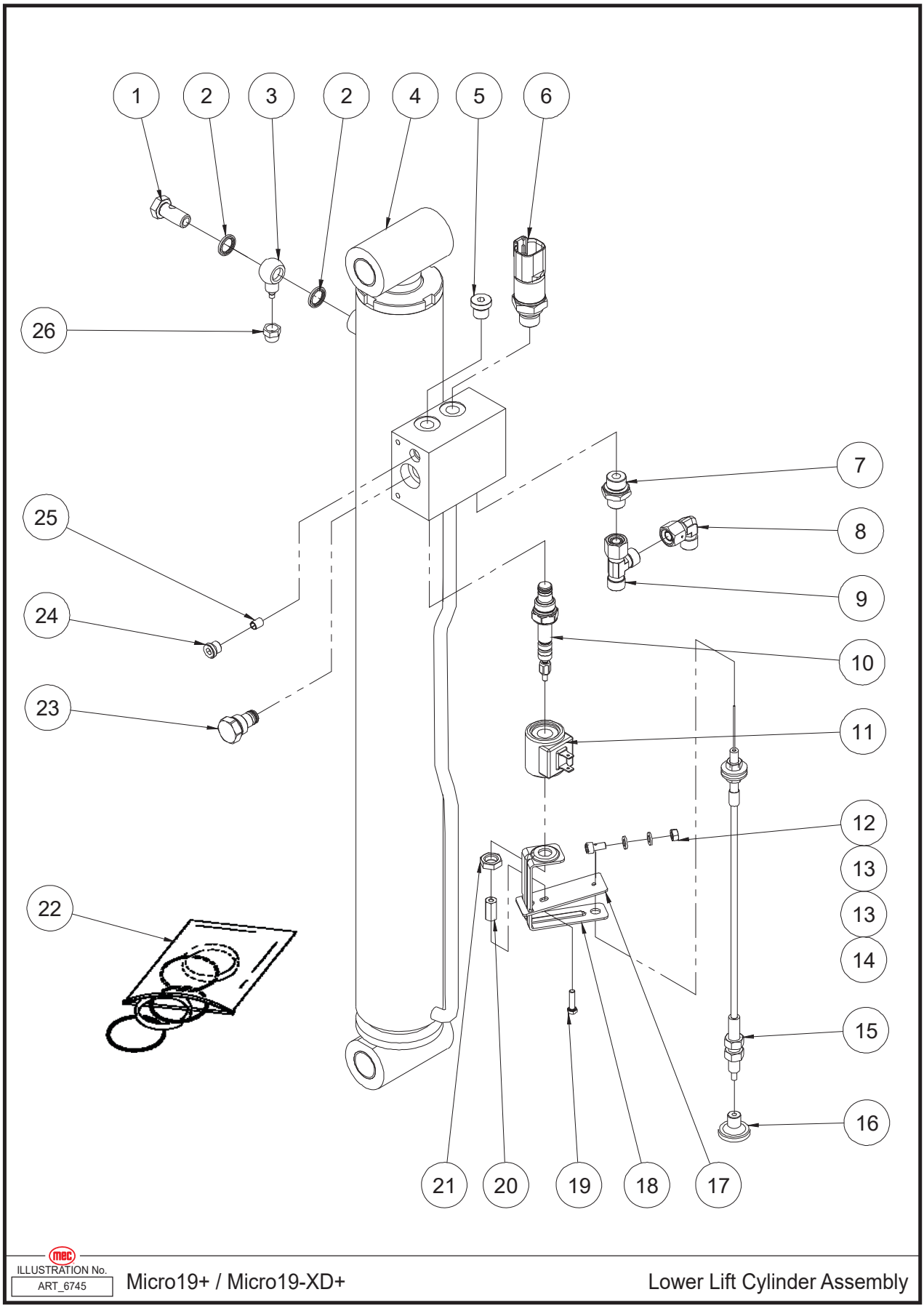

| Item | Part Number | Description | Qty. |
|---|---|---|---|
| 1 | 41166 | Pipeline Bolt | 1 |
| 2 | 43361 | Washer | 2 |
| 3 | 41167 | Piecing Devices | 1 |
| 4 | 44832 | Lower Lift Cylinder | 1 |
| 5 | 42480 | Plug 4MN-14WD | 1 |
| 6 | 44448 | Pressure Sensor (Current Signal) | 1 |
| | 46335 | Pressure Sensor (Voltage Signal) | 1 |
| | 42480 | Plug 4MN-14WD | 1 |
| 7 | 43638 | Straight Fitting | 1 |
| 8 | 43639 | Elbow | 1 |
| 9 | 43640 | Fitting | 1 |
| 10 | 44003 | Solenoid Valve Spool | 1 |
| 11 | 46764 | Coil | |
| 12 | 53361 | Nut NHEX M06-1.00 ZP | 1 |
| 13 | 50000 | WSHR M06 Standard Flat Washer ZP | 2 |
| 14 | 42466 | Set Screw | 1 |
| 15 | 42465 | Lowering Anchor Line | 1 |
| 16 | 41162 | Lowering Knob | 1 |
| 17 | 44833 | Plate | 1 |
| 18 | 44834 | Support | 1 |
| 19 | 53179 | Screw HHCS M05-0.80 × 20 ZP | 1 |
| 20 | 44004 | Cable Connector | 1 |
| 21 | 53362 | Nut NHEX 1/2-20 UNF ZP | 1 |
| 22 | 42470 | Seal Kit | 1 |
| 23 | 49167 | Check Valve | 1 |
| 24 | 42821 | Plug (SAE4) | 1 |
| 25 | 43370 | Orifice (3/8-16-Φ1.8) | 1 |
| 26 | 41413 | Nut | 1 |

# Upper Lift Cylinder Assembly

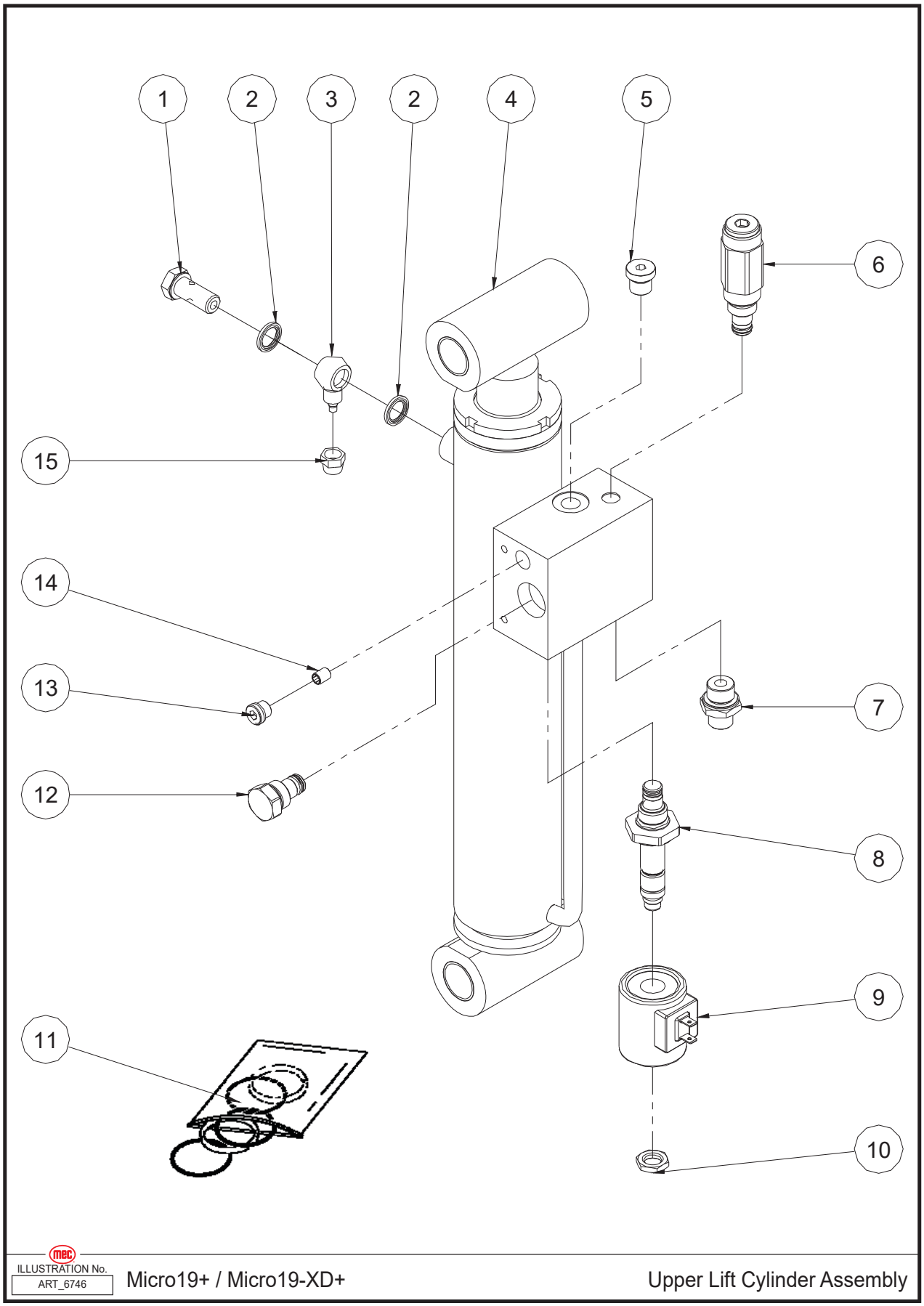

| Item | Part Number | Description | Qty. |
|---|---|---|---|
| 1 | 41166 | Pipeline Bolt | 1 |
| 2 | 43361 | Washer | 2 |
| 3 | 41167 | Piecing Devices | 1 |
| 4 | 44835 | Upper Lift Cylinder | 1 |
| 5 | 42480 | Plug 4MN-14WD | 1 |
| 6 | 41169 | Pressure Valve | 1 |
| 7 | 43638 | Straight Fitting | 1 |
| 8 | 45390 | Solenoid Valve Spool | 1 |
| 9 | 46764 | Coil | 1 |
| 10 | 53362 | Nut NHEX 1/2-20 UNF ZP | 1 |
| 11 | 42475 | Seal Kit | 1 |
| 12 | 49167 | Check Valve | 1 |
| 13 | 42821 | Plug (SAE4) | 1 |
| 14 | 44017 | ORIFICE 0.7MMX3/8-16 | 1 |
| 15 | 41413 | Nut | 1 |

# Hydraulic Hoses and Fittings

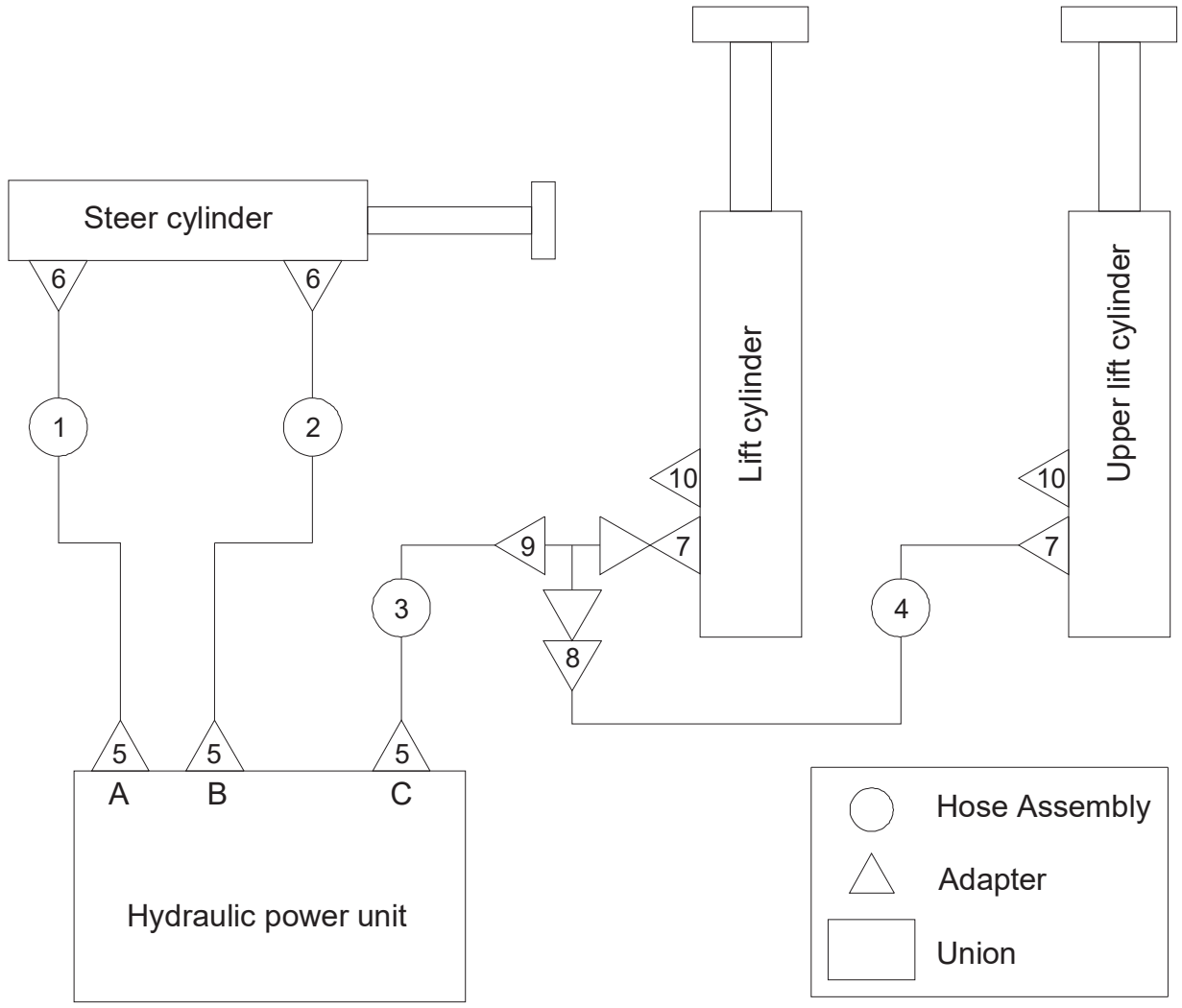


ILLUSTRATION No. ART_6747 Micro19+ / Micro19-XD+ Hydraulic Hoses and Fittings

| Item | Part Number | Description | Qty. |
|---|---|---|---|
| 1 | 61068 | Hose Assembly | 1 |
| 2 | 61069 | Hose Assembly | 1 |
| 3 | 42478 | Hose Assembly | 1 |
| 4 | 44018 | Hose Assembly, Upper Lift Cyl | 1 |
| 5 | 41296 | Straight Fitting (Adapter) | 3 |
| 6 | 41298 | Straight Fitting (Adapter) | 2 |
| 7 | 43638 | Straight Fitting | 2 |
| 8 | 43639 | Elbow | 1 |
| 9 | 43640 | Tee Fitting | 1 |
| 10 | 42480 | Plug 4MN-14WD | 2 |

# Electrical Harness

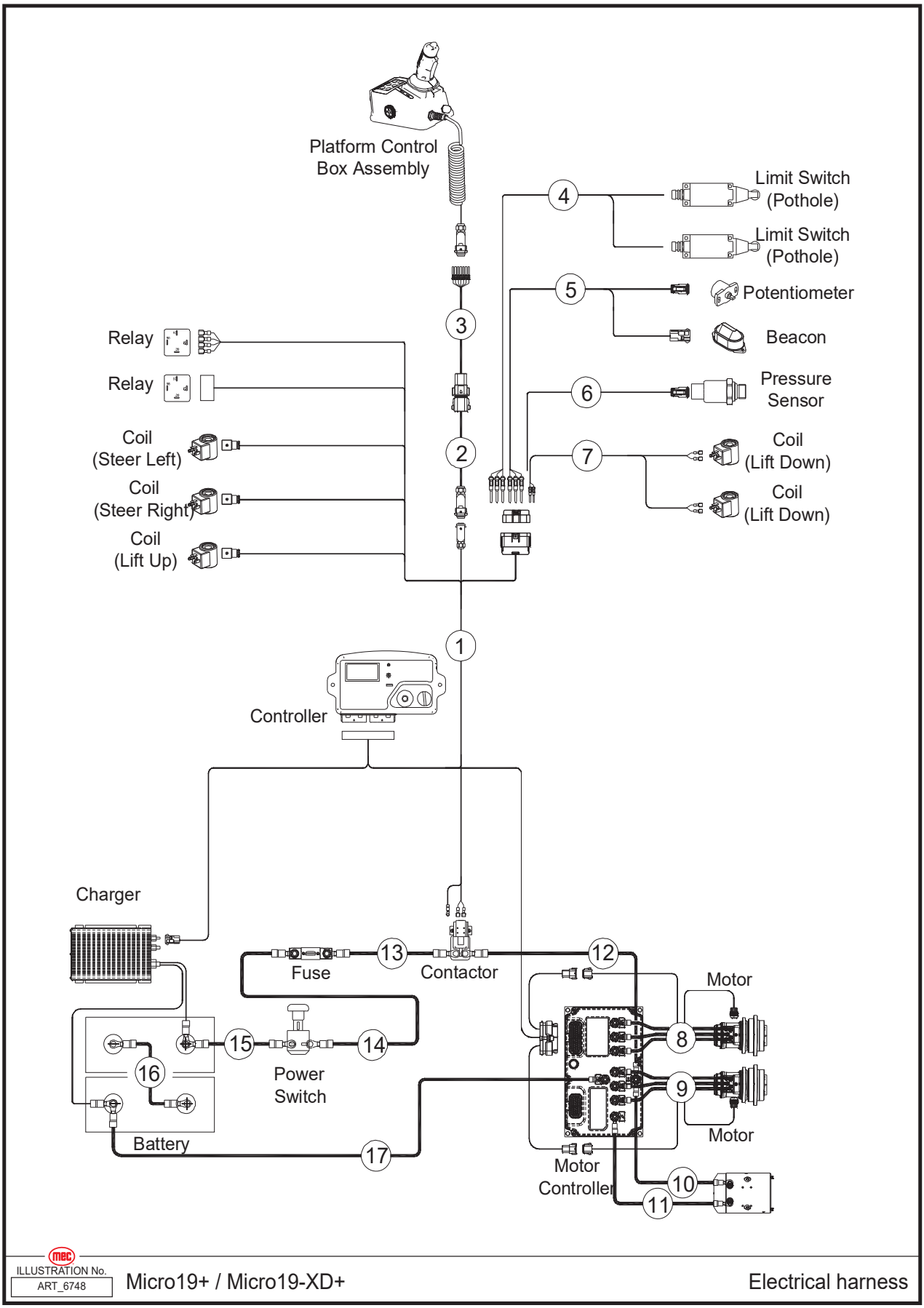

| Item | Part Number | Description | Qty. |
|---|---|---|---|
| 1 | 61070 | ECU Harness | 1 |
| 2 | 61071 | Drag Chain Harness | 1 |
| 3 | 61072 | Platform Control Box Harness | 1 |
| 4 | 61073 | Pothole Limit Switch Harness | 1 |
| 5 | 61074 | Potentiometer and Beacon Harness | 1 |
| 6 | 49760 | Pressure Sensor Harness | 1 |
| 7 | 61075 | Lowering Valve Harness | 1 |
| 8 | 61076 | Drive Motor Harness, Right | 1 |
| 9 | 61077 | Drive Motor Harness, Left | 1 |
| 10 | 61078 | Pump Positive Harness | 1 |
| 11 | 61079 | Pump Positive Harness | 1 |
| 12 | 41855 | Harness, Drive Controller | 1 |
| 13 | 61080 | Contactor Harness | 1 |
| 14 | 61081 | Fuse Harness | 1 |
| 15 | 61082 | Battery Positive Harness | 1 |
| 16 | 42488 | Harness, Battery (Fullriver Batteries) | 1 |
| 17 | 42489 | Battery Negative Harness | 1 |

# Power to Platform

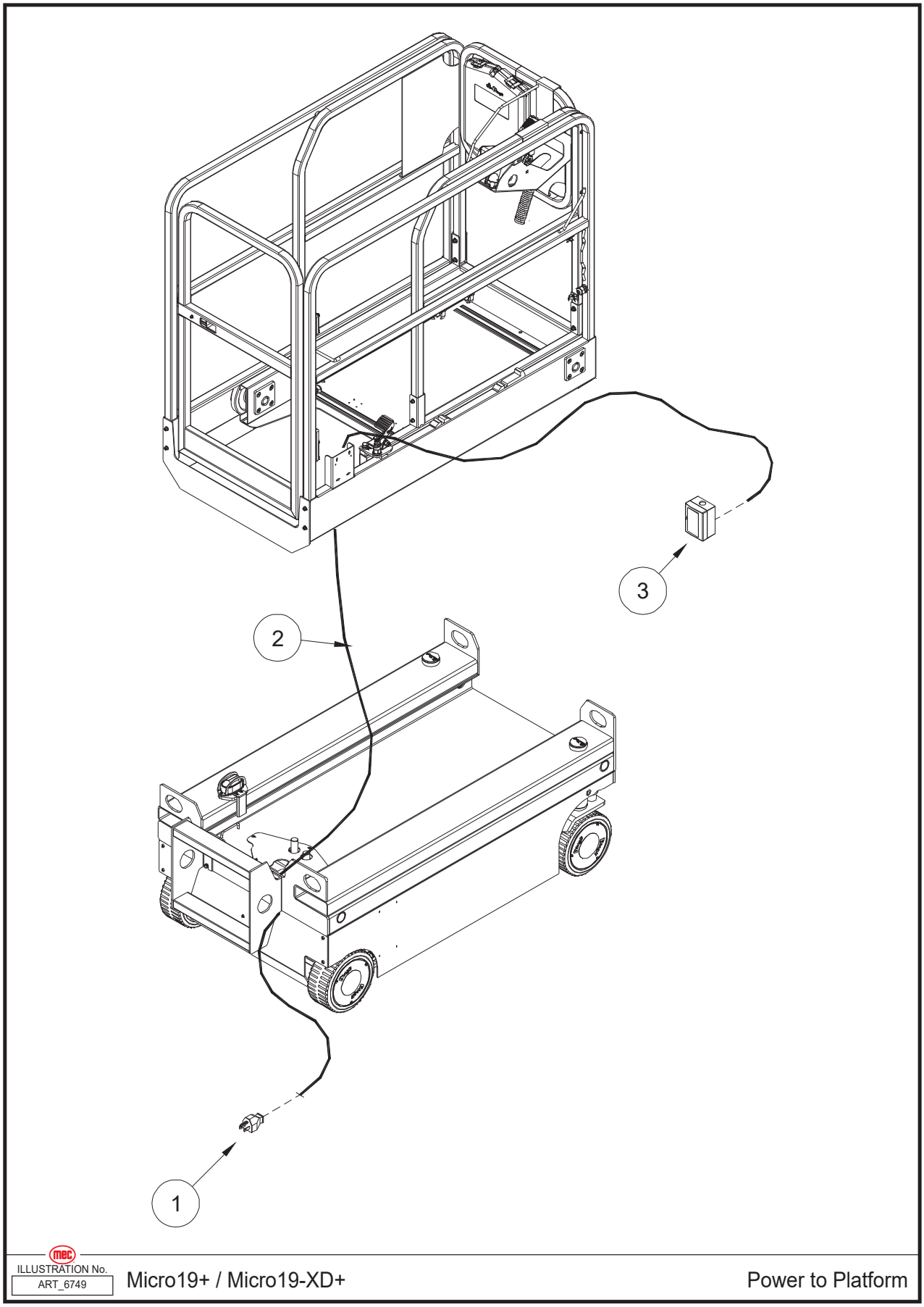

| Item | Part Number | Description | Qty. |
|---|---|---|---|
| 1 | 43690 | AC Plug 110V | 1 |
| 2 | 43741 | Wire Cable Power To Platform | 1 |
| 3 | 43694 | AC Socket | 1 |

# Micro19+ Decals

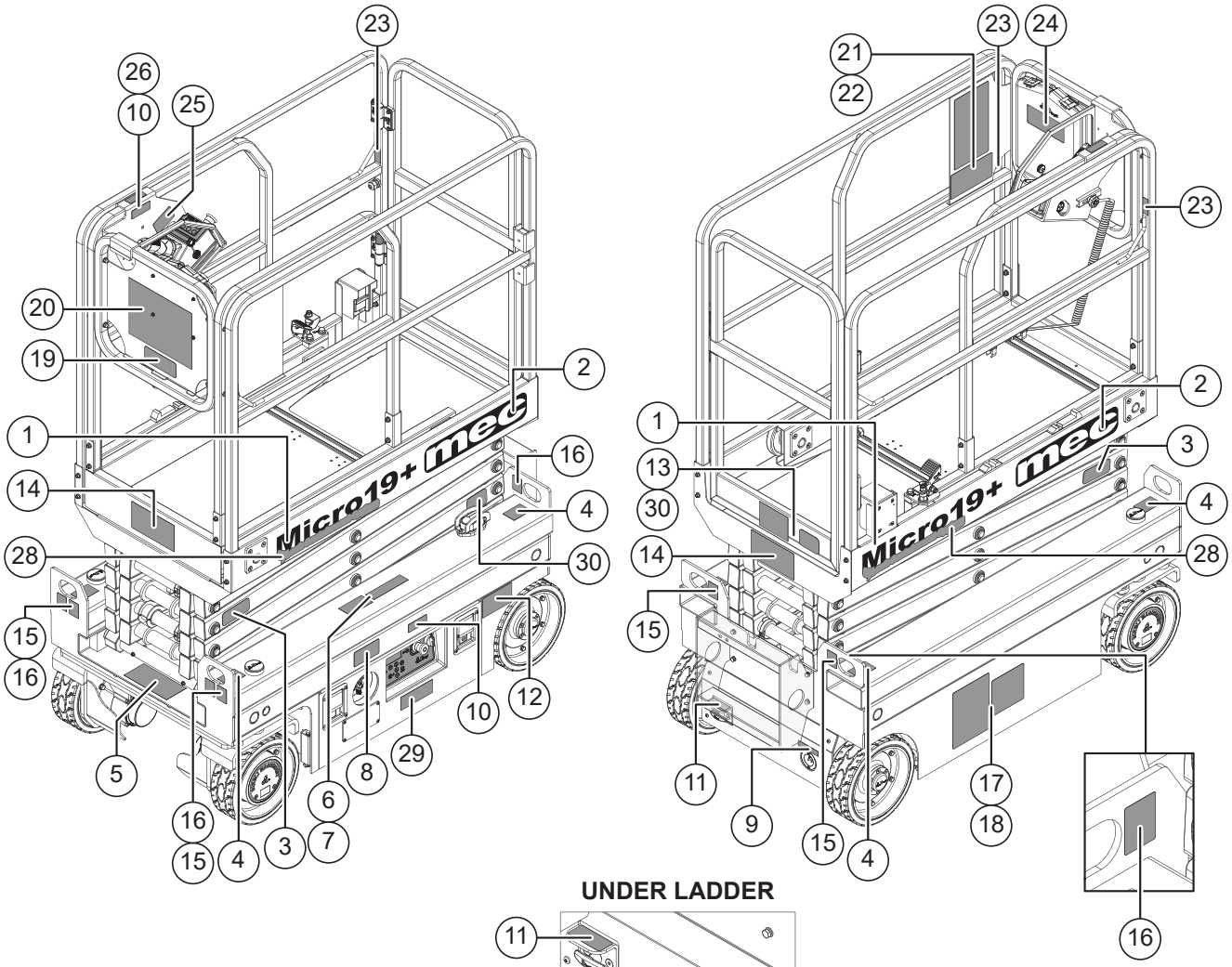


UNDER LADDER

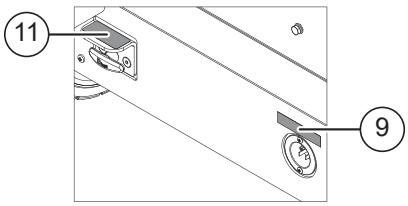


PLATFORM DECK EXTENDED

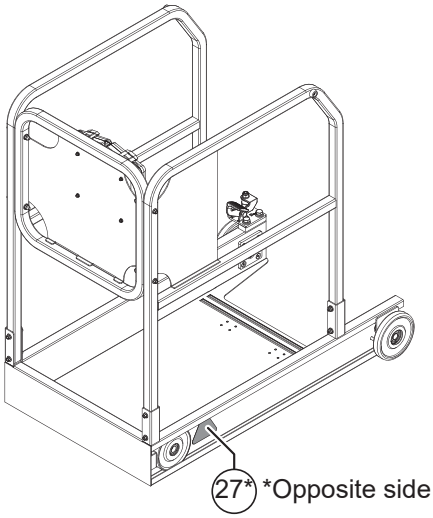


*Opposite side also.

| | | | | |
|---|---|---|---|---|
| 1<br>Micro19+<br>97221 Qty. - 2 | 2<br>mec<br>94114 Qty. - 2 | 3<br>9313011<br>41638 Qty. - 2 | 4<br>WARNING<br>MAXIMUM TIE-DOWN ANGLE 30°<br>94362<br>94362 Qty. - 4 | 5<br>95215 Qty. - 1 |
| 6<br>WARNING<br>DO NOT POWERWASH OR SPRAY ELECTRONIC COMPONENTS OR CONNECTORS. MOISTURE MAY CAUSE DAMAGE AND/OR ERRATIC OPERATION<br>90732<br>90732 Qty. - 1 | 7<br>WARNING<br>RELEASE BRAKES BEFORE TOWING TO PREVENT DAMAGE TO DRIVE SYSTEM 42534<br>42534 Qty. - 1 | 8<br>NOTICE<br>Cut off the power when the machine is repaired or not used for long period.<br>ON<br>OFF<br>49802 Qty. - X | 9<br>BATTERY CHARGER AND POWER TO PLATFORM<br>94659 Qty. - 1 | 10<br>Refer the operator to the instructions for use.<br>9314013<br>41639 Qty. - 2 |
| 11<br>EMERGENCY LOWER<br>Pull knob to lower platform<br>9311017<br>41636 Qty. - 1 | 12<br>WARNING<br>Tip-over Hazard<br>Do not use batteries that weigh less than the original equipment. Batteries are used as counterweight and are critical to machine stability.<br>Each battery must weigh 74 lbs / 33.5 kg. The batteries must weigh a minimum of 148 lbs / 67 kg.<br>49801 R0<br>49801 Qty. - 1 | 13<br>mec<br>95301 Qty. - 1 | 14<br>WARNING<br>600 LBS (272 KG) 300 LBS (136 KG) 300 LBS (136 KG) OUTDOOR<br>28 MPH (12.5 M/S)<br>45 LBS (200 N)<br>80% HIGHT<br>600 LBS (272 KG) 300 LBS (136 KG) 300 LBS (136 KG) INDOOR<br>0 MPH (0 M/S)<br>90 LBS (400 N)<br>49607<br>49607 Qty. - 2 | 15<br>9311015<br>49748 Qty. - 4 |
| 16<br>9311013<br>45899 Qty. - 4 | 17<br>WARNING<br>41649 Qty. - 1 | 18<br>DANGER<br>Explosion/Burn Hazard<br>Read Manuals<br>41641 Qty. - 1 | 19<br>mec DIRECT ELECTRIC DRIVE<br>94423<br>94423 Qty. - 1 | 20<br>mec<br>MEC AERIAL WORK PLATFORMS<br>1401 S. MADERA AVE, KERMAN, CA 93630 USA<br>1-559-842-1500 www.MECawp.com<br>90719 Qty. - 1 |
| 21<br>DANGER<br>43885 Qty. - 1 | 22<br>DANGER<br>Tip-over Hazard<br>Intermittent sounds, unit is on a severe slope, Death or serious injury could occur.<br>1.Lower the platform.<br>2.Move the machine to level surface.<br>9414123UM<br>41647 Qty. - 1 | 23<br>Restraint only 1 Occurrence<br>9414123UM<br>41648 Qty. - 3 | 24<br>WARNING<br>Upon deliveries of this machine through sale, rental, lease, or any other transfer of possession, the following shall be done:<br>1. The entity transferring possession has done so based on all available information regarding where, when and how this machine will be used and operated.<br>2. The entity accepting possession has been familiarized and trained as set forth by the manufacturer and in full compliance with all applicable codes, standards, regulations and laws.<br>Failure to adhere to the above requirements may result in death, personal injury, or property damage.<br>8911<br>Operator's Manual inside this box.<br>8911 Qty. - 1 | 25<br>DRIVE REVERSE/ LIFT UP<br>DRIVE FORWARD/ LOWER<br>94120<br>94120 Qty. - 1 |
| 26<br>Platform controller normal position.<br>9314015<br>41640 Qty. - 1 | 27<br>91850 Qty. - 2 | 28<br>Leak Containment System<br>94866 Qty. - 2 | 29<br>Leak Containment System Patent 11,112,060<br>94867<br>94867 Qty. - 1 | 30<br>MEC - Model Info<br>Text MICRO19PLUS to 1 (844) 483-4669<br>Manuals Brochures Warranty & More<br>97467 Qty. - 2 |
| | | | | |

# Micro19-XD+ Decals

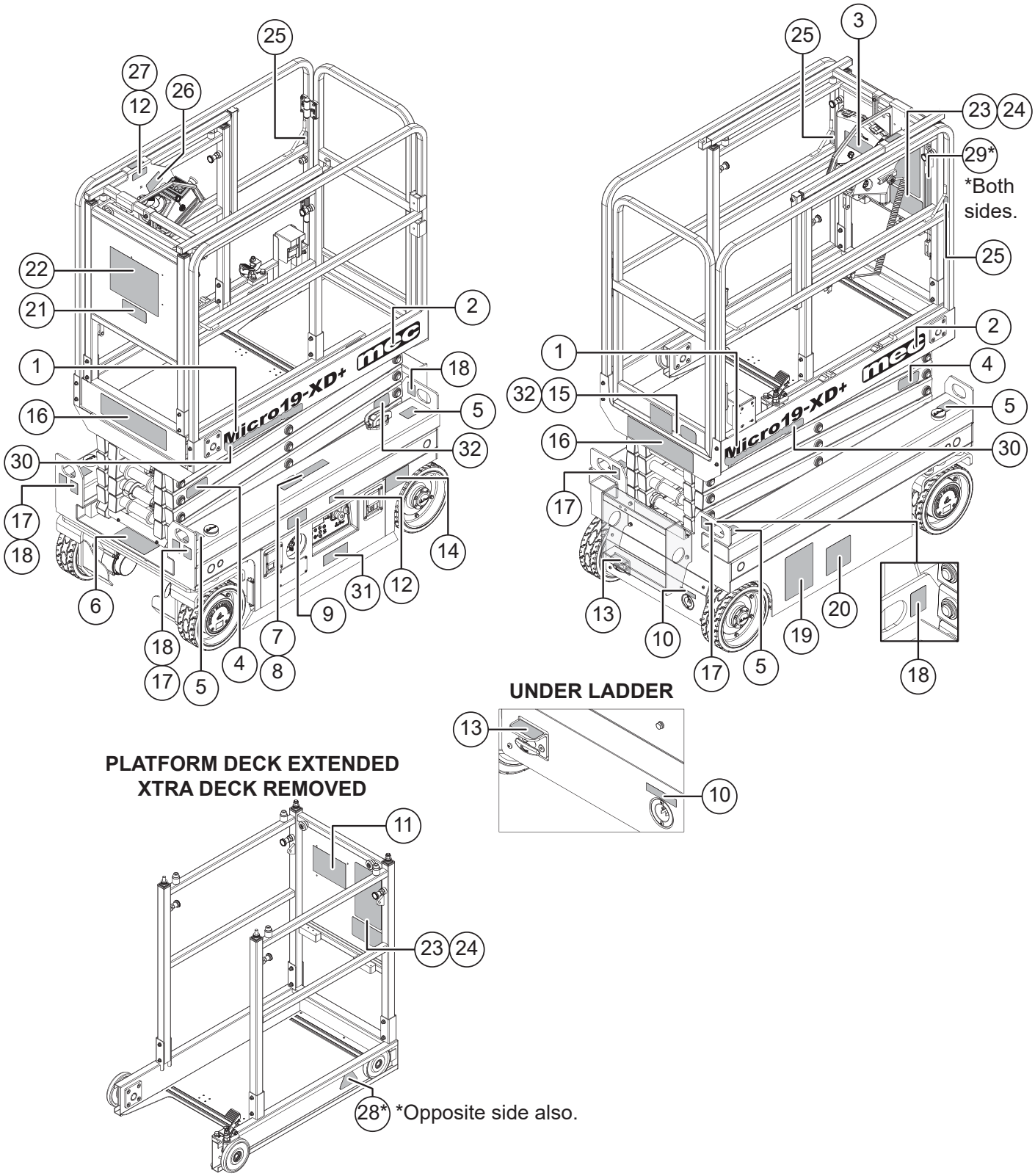

| | | | | |
|---|---|---|---|---|
| **1**<br>Micro19-XD+<br>97222 Qty. - 2 | **2**<br>mec<br>96513 Qty. - 2 | **3**<br>XTRA DECK® INSTRUCTIONS<br>• MAXIMUM CAPACITY 300lbs (136Kg) 1 PERSON.<br>• EXTEND TELESCOPIC GUARDRAILS UNTIL THE PINS SNAP INTO HOLES WHEN THE GUARDRAILS REACH THE EXTENDED POSITION.<br>• FOLD DOWN THE XTRA DECK®.<br>• LIFT-UP AND ENGAGE THE SWINGING TUBE GUARDRAIL ACROSS THE XTRA DECK® GUARDRAIL ENTRANCE.<br>• TO STOW, FIRST FOLD-UP THE XTRA DECK®.<br>• PULL THE PLUNGER PIN, THEN LOWER THE GUARDRAILS TO THE STOWED POSITION.<br>300lbs (136Kg) 1 PERSON<br>97495 Qty. - 1 | **4**<br>9313011<br>41638 Qty. - 2 | **5**<br>WARNING<br>MAXIMUM TIE-DOWN ANGLE 30°<br>30°<br>94362 Qty. - 4 |
| **6**<br>95215 Qty. - 1 | **7**<br>WARNING<br>DO NOT POWERWASH OR SPRAY ELECTRONIC COMPONENTS OR CONNECTORS. MOISTURE MAY CAUSE DAMAGE AND/OR ERRATIC OPERATION<br>90732 Qty. - 1 | **8**<br>WARNING<br>RELEASE BRAKES BEFORE TOWING TO PREVENT DAMAGE TO DRIVE SYSTEM 42534<br>42534 Qty. - 1 | **9**<br>NOTICE<br>Cut off the power when the machine is repaired or not used for long period.<br>ON<br>OFF<br>09310800<br>49802 Qty. - 1 | **10**<br>BATTERY CHARGER AND POWER TO PLATFORM<br>94659 Qty. - 1 |
| **11**<br>OPERATOR'S MANUAL AND SAFE WORKING INSTRUCTIONS LOCATED UNDER STEP<br>95389<br>95389 Qty. - 1 | **12**<br>Refer the operator to the instructions for use.<br>9314013<br>41639 Qty. - 2 | **13**<br>EMERGENCY LOWER<br>Pull knob to lower platform<br>9311017<br>41636 Qty. - 1 | **14**<br>WARNING<br>Tip-over Hazard<br>Do not use batteries that weigh less than the original equipment. Batteries are used as counterweight and are critical to machine stability.<br>Each battery must weigh **74 lbs / 33.5 kg.** The batteries must weigh a minimum of **148 lbs / 67 kg.**<br>49801 R0<br>49801 Qty. - 1 | **15**<br>mec®<br>95301 Qty. - 1 |
| **16**<br>WARNING<br>WARNING<br>49608 Qty. - 2 | **17**<br>09310003.B<br>49748 Qty. - 4 | **18**<br>09310002.B<br>45899 Qty. - 1 | **19**<br>WARNING<br>41649 Qty. - 1 | **20**<br>DANGER<br>Explosion/Burn Hazard<br>41641 Qty. - 1 |
| **21**<br>mec DIRECT ELECTRIC DRIVE<br>94423<br>94423 Qty. - 1 | **22**<br>mec®<br>MEC AERIAL WORK PLATFORMS<br>1401 S. MADERA AVE. KERMAN, CA 93630 USA<br>1-559-842-1500 www.MECawp.com<br>90719 Qty. - 1 | **23**<br>DANGER<br>43885 Qty. - 2 | **24**<br>DANGER<br>Tip-over Hazard<br>If tilt-alarm sounds, unit is on a severe slope. Death or serious injury could occur.<br>1. Lower the platform.<br>2. Move the machine to level surface.<br>9414123UM<br>41647 Qty. - 2 | **25**<br>Restraint only 1 Occurrence<br>9414123UM<br>41648 Qty. - 3 |
| **26**<br>DRIVE FORWARD/ LOWER<br>DRIVE REVERSE/ LIFT UP<br>94528<br>94528 Qty. - 1 | **27**<br>Platform controller normal position.<br>9314015<br>41640 Qty. - 1 | **28**<br>91850 Qty. - 2 | **29**<br>XTRA DECK®<br>95188 Qty. - 2 | **30**<br>Leak Containment System<br>94866 Qty. - 2 |
| **31**<br>Leak Containment System Patent 11,112,060<br>94867<br>94867 Qty. - 1 | **32**<br>MEC - Model Info<br>Text MICRO19XDPLUS to 1 (844) 483-4669<br>Manuals Brochures Warranty & More<br>97468 Qty. - 2 | | | |

# Notes

# Notes

# MEC Parts Order Form

**Phone:** 559-710-2405
**Fax:** 559-400-6723
**Email:** Parts@mecawp.com

**Please Fill Out Completely:**

**Date:** _____ **Ordered By:** _____
**Account:** _____ **Your Fax No.:** _____
**Bill to:** _____ **Ship to:** _____

**Purchase Order Number** _____ **Ship VIA** _____

*** All orders MUST have a Purchase Order Number* ***Fed Ex shipments require Fed Ex account number*

| Part Number | Description | Quantity | Price |
|---|---|---|---|
| | | | |
| | | | |
| | | | |
| | | | |
| | | | |
| | | | |
| | | | |
| | | | |
| | | | |
| | | | |
| | | | |
| | | | |

All back-ordered parts will be shipped when available via the same ship method as original order unless noted below:

_____ Ship complete order only - No Backorders
_____ Ship all available parts and contact customer on disposition of back-ordered parts
_____ Other (Please specify)

Signature _____

# Limited Owner Warranty

MEC Aerial Platform Sales Corp. warrants its equipment to the original purchaser against defects in material and/or workmanship under normal use and service for one (1) year from date of registered sale or date the unit left the factory if not registered. MEC Aerial Platform Sales Corp. further warrants the structural weldments of the main frame and scissor arms to be free from defects in material or workmanship for five (5) years from date of registered sale or date unit left the factory if not registered. Excluded from such warranty is the battery(s) which carries a ninety (90) day warranty from described purchase date. Warranty claims within such warranty period shall be limited to repair or replacement, MEC Aerial Platform Sales Corp's option, of the defective part in question and labor to perform the necessary repair or replacement based on MEC Aerial Platform Sales Corp's then current flat rate, provided the defective part in question is shipped prepaid to MEC Aerial Platform Sales Corp. and is found upon inspection by MEC Aerial Platform Sales Corp. to be defective in material and/or workmanship. MEC Aerial Platform Sales Corp. shall not be liable for any consequential, incidental or contingent damages whatsoever. Use of other than factory authorized parts; misuse, improper maintenance, or modification of the equipment voids this warranty. The foregoing warranty is exclusive and in lieu of all other warranties, express or implied. All such other warranties, including implied warranties of merchantability and of fitness for a particular purpose, are hereby excluded. No Dealer, Sales Representative, or other person purporting to act on behalf of MEC Aerial Platform Sales Corp. is authorized to alter the terms of this warranty, or in any manner assume on behalf of MEC Aerial Platform Sales Corp. any liability or obligation which exceeds MEC Aerial Platform Sales Corp's obligations under this warranty.

# MEC Aerial Work Platforms

1401 S. Madera Avenue, Kerman, CA 93630 USA
Toll Free: 1.877.MEC.LIFT or 1.877.632.5438
Phone: 1.559.710.2425
Fax: 1.559.710.2390
info@MECawp.com
www.MECawp.com