Service & Parts Manual

Nano10®-XD

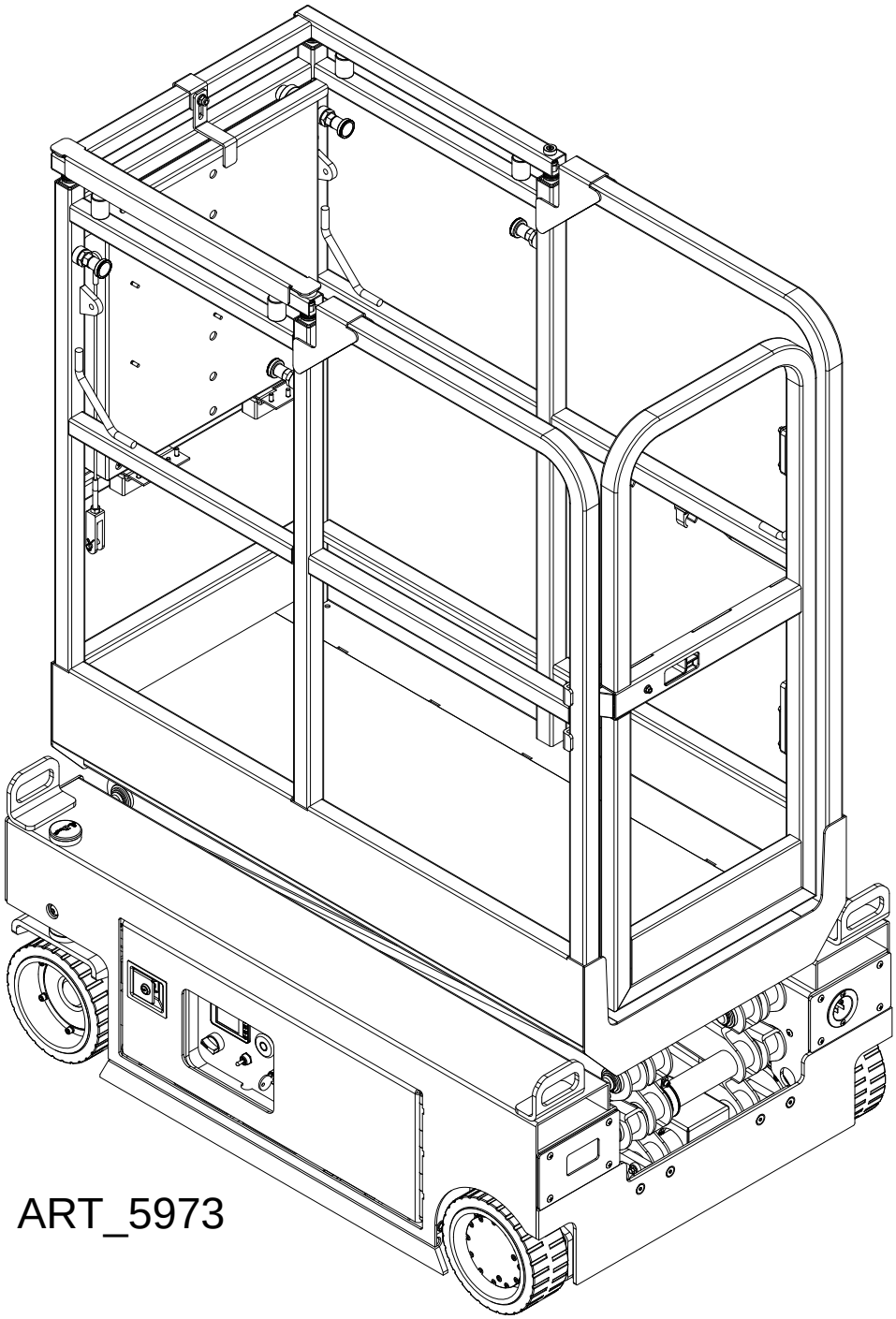

Serial Number Range
18000000 - Up

Part # 96251
October 2023

Revision History

Date	Reason for Update
January 2023	New Release
June 2023	Received Registered Trademark

MEC Aerial Work Platforms

1401 S. Madera Avenue, Kerman, CA 93630 USA
Toll Free: 1-877-632-5438
Phone: 1-559-842-1500
Fax: 1-559-842-1520
info@MECawp.com
www.MECawp.com

Table of Contents

Service Introduction

This Service section is designed to provide you, the customer, with the instructions needed to properly maintain the MEC self-propelled aerial work platform. When used in conjunction with the illustrated Parts section in this manual and the Operator's Manual (provided separately), this manual will assist you in making necessary adjustments and repairs, and identifying and ordering the correct replacement parts.

All parts represented here are manufactured and supplied in accordance with MEC quality standards. We recommend that you use genuine MEC parts to ensure proper operation and reliable performance.

To obtain maximum benefits from your MEC Aerial Work Platforms, always follow the proper operating and maintenance procedures. Only trained authorized personnel should be allowed to operate or service this machine. Service personnel should read and study the Operator's, and the Service and Parts Manuals in order to gain a thorough understanding of the unit prior to making any repairs.

MEC Operator Policy

Note: *The best method to protect yourself and others from injury or death is to use common sense. If you are unsure of any operation,* ***don't start*** *until you are satisfied that it is safe to proceed and have discussed the situation with your supervisor.*

Service personnel and machine operators must understand and comply with all warnings and instructional decals on the body of the machine, at the ground controls, and platform control console.

DANGER

MODIFICATIONS OF THIS MACHINE FROM THE ORIGINAL DESIGN AND SPECIFICATIONS WITHOUT WRITTEN PERMISSION FROM MEC ARE STRICTLY FORBIDDEN. A MODIFICATION MAY COMPROMISE THE SAFETY OF THE MACHINE, SUBJECTING OPERATOR(S) TO SERIOUS INJURY OR DEATH.

MEC's policies and procedures demonstrate our commitment to Quality and our relentless ongoing efforts towards Continuous Improvement, due to which product specifications are subject to change without notice.

Any procedures not found within this manual must be evaluated by the individual to assure oneself that they are "proper and safe."

Your MEC Aerial Work Platform has been designed, built, and tested to provide many years of safe, dependable service. Only trained, authorized personnel should be allowed to operate or service the machine.

MEC, as manufacturer, has no direct control over machine application and operation. Proper safety practices are the responsibility of the user and all operating personnel.

If there is a question on application and/or operation, contact MEC Aerial Work Platforms:

MEC Aerial Work Platforms

1401 S. Madera Avenue, Kerman, CA 93630 USA
Toll Free: 1-877-632-5438
Phone: 1-559-842-1500
Fax: 1-559-842-1520
info@MECawp.com
www.MECawp.com

Safety Symbols & General Safety Tips

MEC manuals and decals use symbols, colors and signal words to help you recognize important safety, operation and maintenance information.

DANGER	**RED and the word DANGER – Indicates an imminently hazardous situation which, if not avoided, will result in death or serious injury.**
WARNING	**ORANGE and the word WARNING – Indicates a potentially hazardous situation which, if not avoided, could result in death or serious injury.**
CAUTION	**YELLOW with alert symbol and the word CAUTION – Indicates a potentially hazardous situation which, if not avoided, may result in minor or moderate injury.**
CAUTION	**YELLOW without alert symbol and the word CAUTION – Indicates a potentially hazardous situation which, if not avoided, may result in property damage.**
NOTICE	**GREEN and the word NOTICE – Indicates operation or maintenance information.**

Regular inspection and constant maintenance is the key to efficient economical operation of your aerial work platform. It will help to assure that your equipment will perform satisfactorily with a minimum of service and repair.

The actual operating environment of the machine governs the inspection schedule. Correct lubrication is an essential part of the preventative maintenance to minimize wear on working parts and ensure against premature failure. By maintaining correct lubrication, the possibility of mechanical failure and resulting downtime is reduced to a minimum.

- Use only recommended lubricants. Improper lubricants or incompatible lubricants may be as harmful as no lubrication.
- Watch for makeshift “fixes” which can jeopardize safety as well as lead to more costly repair.

Specifications

Height, Working Maximum[1]	Indoor	16.4 ft	5.0 m
	Outdoor	13.5 ft	4.3 m
Height, Platform Maximum	Indoor	9.8 ft	3.0 m
	Outdoor	7.5 ft	2.3 m
Height, Stowed Maximum		5.3 ft	1.60 m
Maximum Personnel	Indoor	1	
	Outdoor	1	
Manual Force	Indoor	45 lbs	200 N
	Outdoor	45 lbs	200 N
Width		30.3 in	0.77 m
Length, Platform		45.7 in	1.16 m
Platform Dimensions (Length × Width)		44.1 × 23.6 in	1.16 × 0.6 m
Maximum Load Capacity		500 lbs	227 kg
Maximum Wind Speed		0 mph	0 m/s
Wheelbase		37.4 in	0.95 m
Max Wheel Load		520 lbs	235 Kg
Turning Radius	Inside	17.7 in	0.45 m
	Outside	47.2 in	1.20 m
Ground Clearance		2.4 in	6.0 cm
Ground Clearance (Pothole Guards Deployed)		0.6 in	1.6 cm
Weight[5]		1,235 lbs	560 Kg
Controls		Proportional	
AC Outlet In Platform		Standard	
System Voltage		24 V	
Tire Size		7.9 × 3 in	200 × 80 mm
Airborne Noise Emissions[2]		<70 dB (Vibration value does not exceed 2.5m/s^2)	
Maximum Slope Rating, Stowed Position[3]		25% (14°)	
Maximum Side Slope Rating, Stowed Position[3]		25% (14°)	
Maximum Working Slope		X-1.5°, Y-3°	
Chassis Inclination		1.5 Side	3.0 Inline
Max Wind Speed		28 mph	12.5 m/s
Drive Speeds			
Stowed, Maximum		2.5 mph	4.0 km/h
Platform Raised, Maximum		0.25 mph	0.4 km/h
Floor Loading Information			
Tire Load, Maximum		727 lbs	330 kg
Tire Contact Pressure		145 psi	10.2 kg/cm^2 (997.5 kPa)
Occupied Floor Pressure[4]		194 psf	938.1 kg/m^2 (9.2 kPa)
Battery			
Voltage		12.8V DC	
Quantity		2	
Battery Capacity, Maximum		63 AH	

Meets requirements of ANSI A92.20-2020 and CSA B354.6-2019.
[1] Working Height adds 6 feet (2 m) to platform height.
[2] Maximum sound level at normal operating workstations (A-weighted)
[3] Slope rating is subject to ground conditions and adequate traction.
[4] Floor loading information is approximate and does not incorporate different option configurations.
[5] Weight may increase with certain options.
This applies to machines from serial # 18000375

Bolt Torque Specification - American Standard

Fasteners

Use the following values to apply torque unless a specific torque value is called out for the part being used.

American Standard Cap Screws								
SAE Grade	**5**				**8**			
Cap Screw Size (inches)								
	Torque				**Torque**			
	Ft.	**Lbs**	**Nm**		**Ft.**	**Lbs**	**Nm**	
	Min	**Max**	**Min**	**Max**	**Min**	**Max**	**Min**	**Max**
1/4 - 20	6.25	7.25	8.5	10	8.25	9.5	11	13
1/4 - 28	8	9	11	12	10.5	12	14	16
5/16 - 18	14	15	19	20	18.5	20	25	27
5/16 - 24	17.5	19	12	26	23	25	31	34
3/8 - 16	26	28	35	38	35	37	47.5	50
3/8 - 24	31	34	42	46	41	45	55.5	61
7/16- 14	41	45	55.5	61	55	60	74.5	81
7/16 - 20	51	55	69	74.5	68	75	92	102
1/2 - 13	65	72	88	97.5	86	96	116	130
1/2 - 20	76	84	103	114	102	112	138	152
9/16 - 12	95	105	129	142	127	140	172	190
9/16 - 18	111	123	150	167	148	164	200	222
5/8 - 11	126	139	171	188	168	185	228	251
5/8 - 18	152	168	206	228	203	224	275	304
3/4 - 10	238	262	322	255	318	350	431	474
3/4 - 16	274	302	371	409	365	402	495	544
7/8 - 9	350	386	474	523	466	515	631	698
7/8 - 14	407	448	551	607	543	597	736	809
1- 8	537	592	728	802	716	790	970	1070
1 - 14	670	740	908	1003	894	987	1211	1137

Torque values apply to fasteners as received from the supplier, dry or when lubricated with normal engine oil.

If special graphite grease, moly-disulphide grease, or other extreme pressure lubricants are used, these torque values do not apply.

Bolt Torque Specification - Metric Standard

Fasteners

Use the following values to apply torque unless a specific torque value is called out for the part being used

Metric Cap Screws								
Metric Grade	**8.8**				**10.9**			
Cap Screw Size (Millimeters)					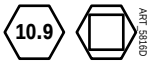			
	Torque				**Torque**			
	Ft.	**Lbs**	**Nm**		**Ft.**	**Lbs**	**Nm**	
	Min	**Max**	**Min**	**Max**	**Min**	**Max**	**Min**	**Max**
M6 × 1.00	6	8	8	11	9	11	12	15
M8 × 1.25	16	20	21.5	27	23	27	31	36.5
M10 × 1.50	29	35	39	47	42	52	57	70
M12 × 1.75	52	62	70	84	75	91	102	123
M14 × 2.00	85	103	115	139	120	146	163	198
M16 × 2.50	130	158	176	214	176	216	238	293
M18 × 2.50	172	210	233	284	240	294	325	398
M20 × 2.50	247	301	335	408	343	426	465	577
M22 × 2.50	332	404	450	547	472	576	639	780
M24 × 3.00	423	517	573	700	599	732	812	992
M27 × 3.00	637	779	863	1055	898	1098	1217	1488
M30 × 3.00	872	1066	1181	1444	1224	1496	1658	2027

Torque values apply to fasteners as received from the supplier, dry or when lubricated with normal engine oil.

If special graphite grease, moly-disulphide grease, or other extreme pressure lubricants are used, these torque values do not apply.

Hydraulic Components Torque Table

Note: Always lubricate threads with clean hydraulic fluid prior to installation.

Use the following values to torque hydraulic components when a specific value is not available. Always check for torque values in the following places before relying on the Hydraulic Components Torque Table.

- Parts drawings and service instructions in this manual.
- Packaging and instruction sheets provided with new parts.
- Instruction manuals provided by the manufacturer of the component being serviced.

Type: SAE Port Series	Cartridge Poppet		Fittings		Hoses	
	Ft. lbs	Nm	Ft. lbs	Nm	In. lbs	Nm
#4	N/A	N/A	N/A	N/A	135 - 145	15 - 16
#6	N/A	N/A	10 - 20	14 - 27	215 - 245	24 - 28
#8	25 - 30	31 - 41	25 - 30	34 - 41	430 - 470	49 - 53
#10	35 - 40	47 - 54	35 - 40	47 - 54	680 - 750	77 - 85
#12	85 - 90	115 - 122	85 - 90	115 - 122	950 - 1050	107 - 119
#16	130 - 140	176 - 190	130 - 140	176 - 190	1300 - 1368	147 - 155

Hydraulic System, Electrical System and Total System

Hydraulic System

WARNING

HYDRAULIC FLUID UNDER PRESSURE CAN PENETRATE AND BURN SKIN, DAMAGE EYES, AND MAY CAUSE SERIOUS INJURY, BLINDNESS, AND EVEN DEATH. CORRECT LEAKS IMMEDIATELY.

HYDRAULIC FLUID LEAKS UNDER PRESSURE MAY NOT ALWAYS BE VISIBLE. CHECK FOR PIN HOLE LEAKS WITH A PIECE OF CARDBOARD, NOT YOUR HAND.

Electrical System

CAUTION

Prevent damage to battery and/or electrical system;

- **Always disconnect the negative battery cable first.**
- **Always connect the positive battery cable first.**

When the negative cable is installed, a spark will occur if contact is made between the positive side of the battery and a metal surface on the machine. This can cause damage to the electrical system, battery explosion, and personal injury.

Total System

WARNING

FAILURE TO PERFORM PREVENTIVE MAINTENANCE AT RECOMMENDED INTERVALS MAY RESULT IN THE UNIT BEING OPERATED WITH A DEFECT THAT COULD RESULT IN INJURY OR DEATH OF THE OPERATOR.

IMMEDIATELY REPORT TO YOUR SUPERVISOR ANY DEFECT OR MALFUNCTION. ANY DEFECT SHALL BE REPAIRED PRIOR TO CONTINUED USE OF THE AERIAL WORK PLATFORM.

INSPECTION AND MAINTENANCE SHOULD BE PERFORMED BY QUALIFIED PERSONNEL FAMILIAR WITH THE EQUIPMENT.

Machine Components

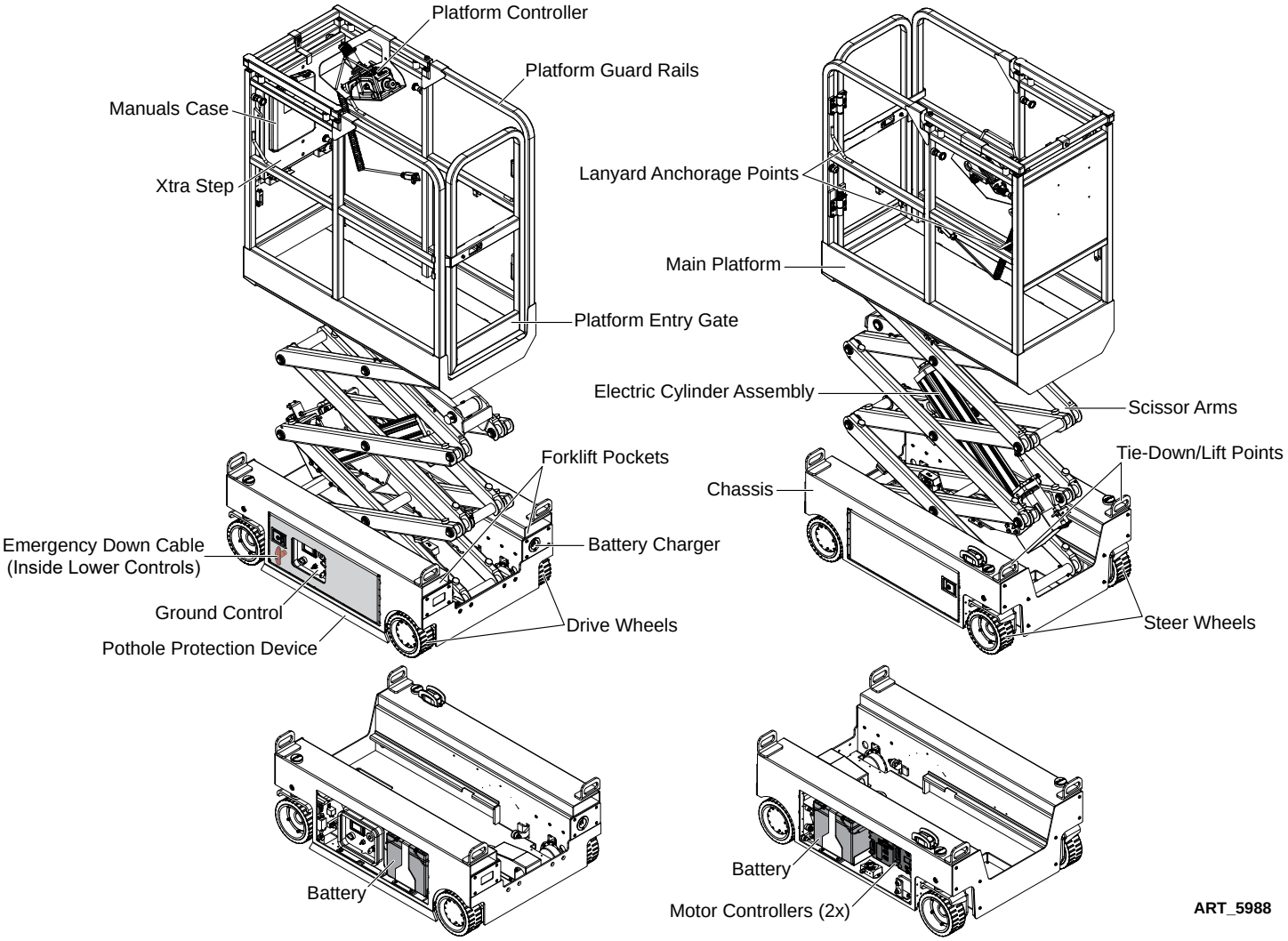

Emergency Systems and Procedures

WARNING

IF THE CONTROL SYSTEM FAILS WHILE THE PLATFORM IS ELEVATED, HAVE AN EXPERIENCED OPERATOR USE THE EMERGENCY LOWERING PROCEDURE TO SAFELY LOWER THE PLATFORM.

DO NOT ATTEMPT TO CLIMB DOWN ELEVATING ASSEMBLY.

Emergency Stop

ART_3353

The machine is equipped with an EMERGENCY STOP switch at the base controls and the platform control box.

- Press the EMERGENCY STOP switch at any time to stop all machine functions.
- Pull switch to reset.
- Either switch will stop all machine functions.
- Both switches must be reset or machine will not operate.

Emergency Lowering

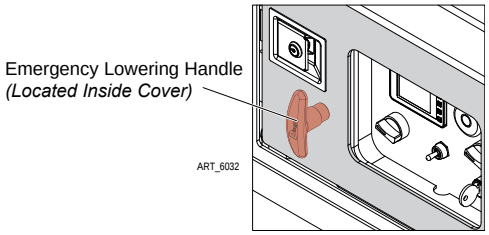

The Emergency Lowering System is used to lower the platform in case of power failure.

To lower the platform, pull the Emergency Lowering Knob located behind the cover of the lower control panel.

Transport and Lifting Instructions

Observe and Obey:

- Common sense and planning must be applied to control the movement of the machine when lifting it with a crane or forklift.
- Only qualified aerial lift operators should move the machine on or off the truck.
- The transport vehicle must be parked on a level surface.
- The transport vehicle must be secured to prevent rolling while the machine is being loaded.
- Be sure the vehicle capacity, loading surfaces and chains or straps are sufficient to withstand the machine weight. See the serial label for the machine weight.
- The machine must be on a level surface or secured before releasing the brakes.
- Do not drive the machine on a slope that exceeds the slope or side slope rating. See Operation on Slopes Hazard below.
- If the slope of the transport vehicle bed exceeds the maximum slope rating, the machine must be loaded and unloaded using a winch as described.

Operation on Slopes Hazard

Do not drive the machine on a slope that exceeds the slope and side slope rating of the machine.

Slope rating applies to machines only in the stowed position.

A	B
25% (14°)	25% (14°)

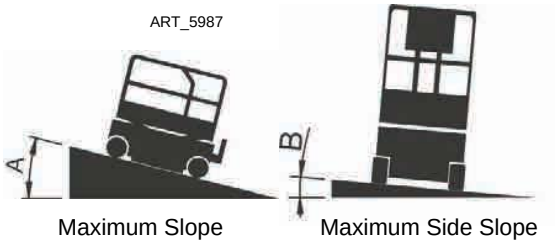

Maximum Slope Rating Stowed

Maximum Side Slope Rating Stowed

Brake Release Operation

1. Chock the wheels to prevent the machine from rolling.
2. Turn the key switch to the platform position. With the platform E-Stop pushed in, press and hold the two Reservation Buttons on the platform controller at the same time while pulling out the E-Stop on the upper control box. Within 8 seconds, the display will show “- -” indicating that the system is in the configuration mode, release both the Reservation Buttons.

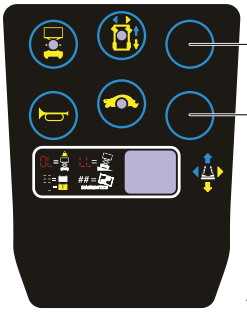

3. Press and hold the Turtle button for 5 seconds then the display will show a solid “br”. The alarm will sound and the brakes will be released.
4. If you want to cancel the brake release, just press any E-Stop or turn off the key switch.

Towing the machine is not recommended. If the machine must be towed, do not exceed 2.5 mph (4.0 km/h).

After the machine is loaded:

1. Push in both ground and platform red Emergency Stop buttons to the “OFF” position.
2. Turn the key switch to the “OFF” position.
3. Chock the wheels to prevent the machine from rolling.

Securing to Truck or Trailer for Transit

Always chock the machine wheels in preparation for transport.

Turn the key switch to the “OFF” position and remove the key before transporting.

Inspect the entire machine for loose or unsecured items.

Use the tie-down points on the chassis for anchoring down to the transport surface.

Use a minimum of four chains or straps.

Use chains or straps of ample load capacity.

If the railings have been folded down, secure them with straps before transporting.

Lifting the Machine with a Forklift

Be sure the controls and component trays are secure. Remove all loose items on the machine.

Fully lower the platform. The platform must remain lowered during all loading and transport procedures.

Use the forklift pockets located on both sides of the ladder.

Position the forklift forks in position with the forklift pockets.

Drive forward to the full extent of the forks.

Raise the machine 6 in (15 cm) and then tilt the forks back slightly to keep the machine secure.

Be sure the machine is level when lowering the forks.

Maintenance Inspection Report

Nano10® Scissor

Fleet Equipment Number _____ **Date** _____

Inspector Name _____ **Inspector Co.** _____

Model Number _____ **Address** _____

Serial Number _____

Hour Meter _____ **Signature** _____

Machine Owner & address _____

Maintain all service records in accordance with ANSI A92.24-2019

*If an inspection receives an "N", remove from service. Once repaired, place an "R" in the box.
*Refer to the proper service manual for specific information, settings and torque specifications.

Key **Y** = Yes, Acceptable **N** = No, Remove from Service **R** = Repaired **0** = Not Applicable

☐ **QUARTERLY** - Inspect only those marked "Q" ☐ **ANNUAL** - Inspect all items

	Q/A	Y/N/O	R
DECALS:			
Legible - undamaged/readable	Q		
Capacity decal correct for model	Q		
RAILS:			
Not damaged, all in place	Q		
All rail fasteners secure	Q		
Entry gate secure, closes properly	Q		
Manual box in good condition	Q		
Operators Manual in manual box	Q		
PLATFORM EXTENSION:			
Rolls in and out freely	Q		
Lock holds deck in place	Q		
Release pedal moves freely (lube)	Q		
ELEVATING ASSEMBLY:			
Scissor Slide Blocks, lubed	Q		
Maintenance Stand, good condition	Q		
Beam structures: Straight, no cracks	A		
Welds: secure, no cracks	A		
Retaining Rings	A		
Cylinder Pins, secure	A		
ELECTRICAL:			
GFCI operates correctly	Q		
Wire harnesses good condition, secure	A		
Comm cable no damage, secure	A		
BASE:			
Fasteners tight	Q		
Cover panels secure	Q		
Welds	A		

	Q/A	Y/N/O	R
WHEELS:			
Tire damage	Q		
Lug nuts (Wheel mounting) torqued correctly	Q		
King Pins lubed	A		
COMPONENT AREA:			
Lift Actuator, no signs of lube leakage	Q		
Steer Actuators, Secure, no damage, leakage	Q		
Electrical Cables, secure, tight, no damage	Q		
Batteries, secure, charged, Cables clean and tight	Q		
Motor controllers secure, Cables tight	Q		
Panel Display, Readable, operable	Q		
Emergency stop, cuts power/operation	Q		
Battery switch cuts battery feed	Q		
Pothole System, Bars deploy completely	Q		
Doors, move easy, latch securely	A		
Platform Control, operate correctly, decals readable	Q		
OPERATIONAL INSPECTION:			
All functions, operate smooth and quiet	Q		
All functions, speeds correct	Q		
Upper control box, operates correctly	Q		
Emergency Down, operates correctly	Q		
Limit switches slows drive when elevated	Q		
Pothole switch test	Q		
Steering moves smoothly, wheels parallel at center	Q		
Indoor/outdoor limit switch set test	Q		
**Check Platform Overload Sensing operation	Q		

**For machine equipped with Platform Overload Protection system only

Daily Maintenance

The following maintenance should be done daily or every 8 hours.

1) Inspect the Manuals and Decals

Keeping the operator's manual in good condition is essential to safe machine operation. The operator's manual is included with each machine and is stored in the manual box in the platform. An illegible or missing manual will not provide safety and operational information necessary for a safe operating condition.

In addition, making sure that all of the safety and instructional decals are in good condition is mandatory for safe machine operation. Decals alert operators and personnel to the many possible hazards associated with using this machine. They also provide users with operation and maintenance information. An illegible decal will fail to alert personnel of a procedure or hazard and could result in unsafe operating conditions.

1. Check to make sure that the operator's manual is present, in good condition, and located in the manual box in the platform.
2. Examine the pages of the operator's manual to be sure that they are legible and in good condition.
   - **Result:** The operator's manual is appropriate for the machine with the operator's manual being legible and in good condition.
   - **Result:** The operator's manual is not appropriate for the machine or the operator's manual is not in good condition or is illegible. Remove the machine from service until the operator's manual is replaced.
3. Open the operator's manual to the decals section. Carefully and thoroughly inspect all the decals on the machine for legibility and damage.
   - **Result:** The machine is equipped with all required decals, with all decals legible and in good condition.
   - **Result:** The machine is not equipped with all required decals, or one or more decals are illegible or in poor condition. Remove the machine from service until the decals are replaced.
4. Always return the manual to the manual box in the platform after use.

2) Perform a Pre-operation Inspection

Completing a Pre-operation Inspection is essential to safe machine operation. The Pre-operation Inspection is a visual inspection performed by the operator prior to each work shift. The inspection is designed to discover if anything is apparently wrong with the machine before the operator performs the function tests. The Pre-operation Inspection also serves to determine if routine maintenance procedures are required.

Complete information to perform this procedure is available in the appropriate operator's manual. Refer to the operator's manual on your machine.

3) Check the Batteries

- New parts will be required to perform this procedure.

Proper battery condition is essential to good machine performance and operational safety. Improper

fluid levels or damaged cables and connections can result in component damage and hazardous conditions.

Note: This check is not required for machines with lithium batteries, or sealed batteries, or maintenance-free batteries.

WARNING **Electrocution hazard. Contact with hot or live circuits may result in death or serious injury. Remove all rings, watches and other jewelry.**

WARNING **Bodily injury hazard. Batteries contain acid. Avoid spilling or contacting battery acid. Neutralize battery acid spills with baking soda and water.**

---

1. Put on protective clothing and eye wear.
2. Be sure that the battery cable connections are tight and free of corrosion.
3. Be sure that the battery hold-down bars are secure.
4. Remove the battery vent caps.
5. Check the battery acid level. If needed, replenish with distilled water to the bottom of the battery fill tube. Do not overfill.
6. Install the vent caps.

Note: Adding terminal protectors and a corrosion preventative sealant will help eliminate corrosion on the battery terminals and cables.

4) Perform Function Tests

Completing the function tests is essential to safe machine operation. Function tests are designed to discover any malfunctions before the machine is put into service. A malfunctioning machine must never be used. If malfunctions are discovered, the machine must be tagged and removed from service.

Complete information to perform this procedure is available in the appropriate operator's manual. Refer to the operator's manual on your machine.

5) Perform 30 Day Service

- Tools will be required to perform this procedure.
- New parts will be required to perform this procedure.

The 30 day maintenance procedure is a one time procedure to be performed after the first 30 days or 40 hours of usage. After this interval, refer to the maintenance tables for continued scheduled maintenance.

Perform the following maintenance procedures:
- Inspect the Tires, Wheels and Lock Nut Torque (Refer to page 18)

Quarterly Maintenance

The following maintenance should be done every 3 months or 250 hours of operation.

1) Inspect the Batteries

- Tools will be required to perform this procedure.
- New parts will be required to perform this procedure.

Proper battery condition is essential to good machine performance and operational safety. Improper fluid levels or damaged cables and connections can result in component damage and hazardous conditions.

WARNING **Electrocution / burn hazard. Contact with electrically charged circuits could result in death or serious injury. Remove all rings, watches and other jewelry.**

WARNING **Bodily injury hazard. Batteries contain acid. Avoid spilling or contacting battery acid. Neutralize battery acid spills with baking soda and water.**

---

1. Put on protective clothing and eye wear.
2. Open the battery tray fully.
3. Be sure that the battery cable connections are free of corrosion.

Note: Adding terminal protectors and a corrosion preventative sealant will help eliminate corrosion on the battery terminals and cables.

4. Be sure that the battery retainers and cable connections are tight.
5. Fully charge the batteries. Allow the batteries to rest 24 hours before performing this procedure to allow the battery cells to equalize.

For models without maintenance-free or sealed batteries:

6. Remove the battery vent caps and check the specific gravity of each battery cell with a hydrometer. Note the results.
7. Check the ambient air temperature and adjust the specific gravity reading for each cell as follows:
   - Add 0.004 to the reading of each cell for every 42°F (5.5°C) above 80.1°F (26.7°C).
   - Subtract 0.004 from the reading of each cell for every 42°F (5.5°C) below 80.1°F (26.7°C).
   - **Result:** All battery cells display an adjusted specific gravity of 1.277 or higher. The battery is fully charged. Proceed to step 11.
   - **Result:** One or more battery cells display a specific gravity of 1.276 or below. Proceed to step 8.
8. Perform an equalizing charge OR fully charge the batteries and allow the batteries to rest at least 6 hours.
9. Remove the battery vent caps and check the specific gravity of each battery cell with a hydrometer. Note the results.
10. Check the ambient air temperature and adjust the specific gravity reading for each cell as

follows:

- Add 0.004 to the reading of each cell for every 42°F (5.5°C) above 80.1°F (26.7°C).
- Subtract 0.004 from the reading of each cell for every 42°F (5.5°C) below 80.1°F (26.7°C).
- **Result:** All battery cells display a specific gravity of 1.277 or greater. The battery is fully charged. Proceed to step 11.
- **Result:** The difference in specific gravity readings between cells is greater than 0.1 OR the specific gravity of one or more cells is less than 1.177. Replace the battery.

11. Check the battery acid level. If needed, replenish with distilled water to 0.11 inches (3 mm) below the bottom of the battery fill tube. Do not overfill.
12. Install the vent caps and neutralize any electrolyte that may have spilled.

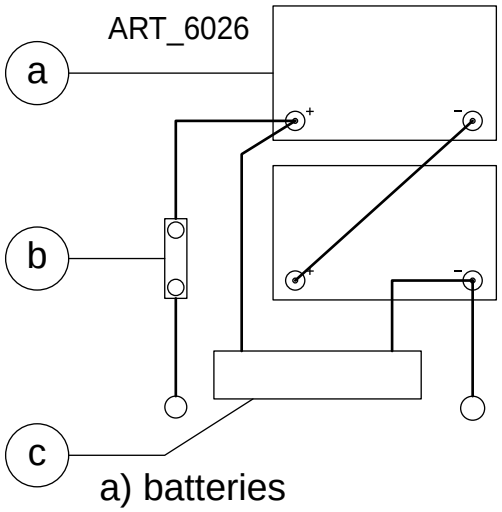

a) batteries
b) fuse
c) battery charger

For lithium batteries

13. The connection between the electrode and the data should be fastened. There should be no dirt, metal dust or other dirt at the connection. If there is any, compressed air should be used to clean it
14. Make sure the battery is reliable and stable.
15. The battery pack should not be cracked, bulging, deformed, pole loose, or otherwise abnormal
16. Battery voltage, temperature and other states should also be checked before use to ensure that all values are within the normal range before starting up for use
17. It is forbidden to use the battery over discharge to ensure that the cell voltage of the unit is not lower than 2V conditions.

For all models:

18. Check each battery pack and verify that the batteries are wired correctly.
19. Inspect the battery charger plug and pigtail for damage or excessive insulation wear. Replace as required.
20. Connect the battery charger to a properly grounded 110-230V / 50-60 Hz single phase AC power supply.
    - **Result:** The charger should operate and begin charging the batteries.
    - **Result:** If, simultaneously, the charger alarm sounds and the LEDs blink, correct the charger connections at the fuse and battery. The charger will then operate correctly and begin charging the batteries.

Note: For best results, use an extension of adequate size with a length no longer than 49 feet (15 meters).

2) Inspect the Electrical Wiring

- Tools will be required to perform this procedure.

Making sure that the electrical wiring is in good condition is essential to safe operation and good machine performance. Failure to find and replace burnt, chafed, corroded or pinched wires could result in unsafe operating conditions and may cause component damage.

WARNING **Electrocution / burn hazard. Contact with electrically charged circuits could result in death or serious injury. Remove all rings, watches and other jewelry.**

1. Raise the platform approximately 4.9 ft (1.5 m) from the ground.
2. Open the cover.
3. Inspect the center chassis area and scissor arms for burnt, chafed and pinched cables.
4. Inspect the following areas for burnt, chafed, corroded, pinched and loose wires:
   - Ground controls wiring
   - Chassis side doors inside wiring
   - Steering Electric cylinder motor wiring
   - Raising Electric cylinder motor wiring
   - Platform controls wiring
   - Power to platform wiring

5. Inspect for a liberal coating of dielectric grease in the following locations:
   - Between the ground controls and platform controls
   - All wire harness connectors Level sensor
6. Lower the platform to the stowed position and turn the machine off.

3) Inspect the Tires and Wheels (including lock nut torque)

- Tools will be required to perform this procedure.
- New parts will be required to perform this procedure.

Making sure that the tires and wheels are in good condition is essential to safe operation and good performance. Tire and/or wheel failure could result in a machine tip-over. Component damage may also result if problems are not discovered and repaired in a timely fashion.

1. Check the tire surface and sidewalls for cuts, cracks, punctures and unusual wear.
2. Check each wheel for damage, bends and cracks.
3. Check each bolt for proper torque.

Bolt Torque, Dry	6.6 ft-lbs (9 Nm)
Bolt Torque, Lubricated	6.2 ft-lbs (8.4 Nm)

4) Test the Emergency Stop

A properly functioning Emergency Stop is essential for safe machine operation. An improperly operating red Emergency Stop button will fail to shut off power and stop all machine functions, resulting in a hazardous situation.

As a safety feature, selecting and operating the ground controls will override the platform controls, except the platform red Emergency Stop button.

1. Turn the key switch to ground control and pull out the red Emergency Stop button to the “ON” position at both the ground and platform controls.

2. Push in the red Emergency Stop button at the ground controls to the “OFF” position.
   - **Result:** No machine functions should operate.
3. Turn the key switch to platform control and pull out the red Emergency Stop button to the “ON” position at both the ground and platform controls.
4. Push in the red Emergency Stop button at the platform controls to the “OFF” position.
   - **Result:** No machine functions should operate.

Note: The red Emergency Stop button at the ground controls will stop all machine operation, even if the key switch is switched to platform control.

5) Test the Key Switch

Proper key switch action and response is essential to safe machine operation. The machine can be operated from the ground or platform controls and the activation of one or the other is accomplished with the key switch. Failure of the key switch to activate the appropriate control panel could cause a hazardous operating situation.

Perform this procedure from the ground using the platform controls. Do not stand in the platform.

1. Pull out the red Emergency Stop button to the “ON” position at both the ground and platform controls.
2. Turn the key switch to platform control.
3. Check the platform up/down function from the ground controls.
   - **Result:** The machine functions should not operate.
4. Turn the key switch to ground control.
5. Check the machine functions from the platform controls.
   - **Result:** The machine functions should not operate.
6. Turn the key switch to the “OFF” position.
   - **Result:** No function should operate.

6) Test the Horn

The horn is activated at the platform controls and sounds at the ground as a warning to ground personnel. An improperly functioning horn will prevent the operator from alerting ground personnel of hazards or unsafe conditions.

1. Turn the key switch to platform control and pull out the red Emergency Stop button to the “ON” position at both the ground and platform controls.
2. Push down the horn button at the platform controls.
   - **Result:** The horn should sound.

7) Test the Drive Brakes

- Tools will be required to perform this procedure.
- New parts will be required to perform this procedure.

Proper brake action is essential to safe machine operation. The drive brake function should operate smoothly, free of hesitation, jerking and unusual noise.

Perform this procedure with the machine on a firm level surface that is free of obstructions, with the

platform in the stowed position.

1. Mark a test line on the ground for reference.
2. Turn the key switch to platform control and pull out the red Emergency Stop button to the “ON” position at both the ground and platform controls.
3. Lower the platform to the stowed position.
4. Press the drive function select button.
5. Choose a point on the machine; i.e., contact patch of a tire, as a visual reference for use when crossing the test line.
6. Bring the machine to top drive speed before reaching the test line. Release the function enable switch or the joystick when your reference point on the machine crosses the test line.
7. Measure the distance between the test line and your machine reference point.
   - **Result:** The machine stops within the specified braking distance. No action required.
   - **Result:** The machine does not stop within the specified braking distance.

Note: The brakes must be able to hold the machine on any slope it is able to climb.

8. Replace the brakes and repeat this procedure beginning with step 1.

Braking Distance, Maximum	
High range on paved surface	24 in±11.8 in (61 cm±30 cm)

8) Test the Drive Speed - Stowed Position

- Tools will be required to perform this procedure.

Proper drive functions are essential to safe machine operation. The drive function should respond quickly and smoothly to operator control. Drive performance should also be free of hesitation, jerking and unusual noise over the entire proportionally controlled speed range.

Perform this procedure with the machine on a firm, level surface that is free of obstructions.

1. Create start and finish lines by marking two lines on the ground 40 ft (12.2 m) apart.
2. Turn the key switch to platform control and pull out the red Emergency Stop button to the “ON” position at both the ground and platform controls.
3. Lower the platform to the stowed position.
4. Press the drive function select button.
5. Choose a point on the machine; i.e., contact patch of a tire, as a visual reference for use when crossing the start and finish lines.
6. Bring the machine to top drive speed before reaching the start line. Begin timing when your reference point on the machine crosses the start line.
7. Continue at full speed and note the time when your reference point on the machine passes over the finish line. The time is less than 11 sec.

9) Test the Drive Speed-Raised Position

- Tools will be required to perform this procedure.

Proper drive functions are essential to safe machine operation. The drive function should respond quickly and smoothly to operator control. Drive performance should also be free of hesitation, jerking and unusual noise over the entire proportionally controlled speed range.

Perform this procedure with the machine on a firm, level surface that is free of obstructions.

1. Create start and finish lines by marking two lines on the ground 40 ft (12.2 m) apart.
2. Turn the key switch to platform control and pull out the red Emergency Stop button to the “ON” position at both the ground and platform controls.
3. Press the lift function select button.
4. Press and hold the function enable switch on the joystick.
5. Raise the platform approximately 4.3 ft (1.2 m) from the ground.
6. Press the drive function select button.
7. Choose a point on the machine; i.e., contact patch of a tire, as a visual reference for use when crossing the start and finish lines.
8. Bring the machine to top drive speed before reaching the start line. Begin timing when your reference point on the machine crosses the start line.
9. Continue at full speed and note the time when your reference point on the machine passes over the finish line. The time is less than 111 sec.

10) Test the Indoor/Outdoor select Functions

Note: Perform this test from the ground with the platform controller. Do not stand in the platform. Make sure there is safe height clearance and no overhead obstruction or electrical power wires.

1. Turn the key switch to ground control position.
2. Turn the Indoor/Outdoor switch to Outdoor mode.
3. Move up and hold the platform up / down switch. Raise the platform to the highest position and measure the platform height.
   - **Result:** The platform height shall not exceed 7.5 ft (2.3m).
4. Turn the Indoor/Outdoor switch to Indoor mode.
5. Move up and hold the platform up / down switch. Raise the platform to the highest position and measure the platform height
   - **Result:** The platform continued to rise to a height of about 9.8 ft (3 m).
6. Turn the Indoor/Outdoor switch to Outdoor mode.
   - **Result:** The alarm should sound.
7. Turn the Indoor/Outdoor switch to Indoor mode fully lower the platform.
8. Turn the key switch to platform control position.
9. Turn the Indoor/Outdoor switch to Outdoor mode.
10. Press the lift function select button.
11. Press and hold the function enable switch on the control handle.
12. Slowly move the control handle in the direction indicated by the yellow arrow. Raise the platform to the highest position and measure the platform height
    - **Result:** The platform height shall not exceed 7.5 ft (2.3m).
13. Turn the Indoor/Outdoor switch to Indoor mode
14. Press and hold the function enable switch on the control handle.
15. Slowly move the control handle in the direction indicated by the yellow arrow. Raise the platform to the highest position and measure the platform height
    - **Result:** The platform continued to rise to a height of about 9.8 ft (3 m).
16. Turn the Indoor/Outdoor switch to Outdoor mode.
    - **Result:** The alarm should sound.

Turn the Indoor/Outdoor switch to Indoor mode. Fully lower the platform.

Semi-annual Maintenance

The following maintenance should be done every 6 months or 500 hours of operation.

1) Test the Platform Overload System

- Tools will be required to perform this procedure.
- Dealer service will be required to perform this procedure.

Testing the platform overload system regularly is essential to safe machine operation. Continued use of an improperly operating platform overload system could result in the system not sensing an overloaded platform condition. Machine stability could be compromised resulting in the machine tipping over.

WARNING **Perform this procedure with the machine on a firm, level surface.**

Note: Perform this test from the ground with the platform controller. Do not stand in the platform.

1. Turn the key switch to platform control. Pull out the platform and ground red Emergency Stop button to the “ON” position.
2. Determine the maximum platform capacity.
3. Using a suitable lifting device, place an appropriate test weight equal to the maximum platform capacity in the center of the platform floor.
4. Raise the platform.
   - **Result:** The platform rise to the highest position. The overload alarm at the platform controls should not sound, indicating a normal condition.
   - **Result:** The platform is in the process of lifting. The overload alarm at the platform controls sounds. Calibrate the platform overload system.
5. Lower the platform to the stowed position.
6. Add an additional weight to the platform not to exceed 20% of the maximum rated load. Raise the platform
   - **Result:** The overload alarm at the platform controls sound, indicating a normal condition.
   - **Result:** The overload alarm at the platform controls does not sound. Calibrate the platform overload system.
7. Test all machine functions from the platform controls.
   - **Result:** All platform control functions should operate.
8. Turn the key switch to ground controls.
9. Test all machine functions from the ground controls.
   - **Result:** All ground control functions should not operate.
10. Lower the platform to the stowed position.
11. Lift the test weight off the platform floor using a suitable lifting device.

Yearly Maintenance

The following maintenance should be done every year or 1,000 hours of operation.

1) Check the Scissor Arm Wear Pads

- Tools will be required to perform this procedure.
- New parts will be required to perform this procedure.

Making sure that the condition of the scissor arm wear pads is good is essential to safe machine operation. Continued use of worn out wear pads may result in component damage and unsafe operating conditions.

Perform this procedure with the platform in the stowed position.

1. Measure the distance between the number one arm cross tube and the chassis deck at the left side of the steer end of the machine.
   - **Result:** The measurement is 1 inch (25 mm), or more. Proceed to step 2.
   - **Result:** The measurement is less than 1 inch (25 mm). Replace both wear pads.
2. Measure the distance between the number one arm cross tube and the chassis deck at the right side of the steer end of the machine.
   - **Result:** The measurement is 1 inch (25 mm) or more. Proceed to step 3.
   - **Result:** The measurement is less than 1 inch (25 mm). Replace both wear pads.
3. Apply a thin layer of dry film lubricant to the area of the chassis where the scissor arm wear pads make contact.

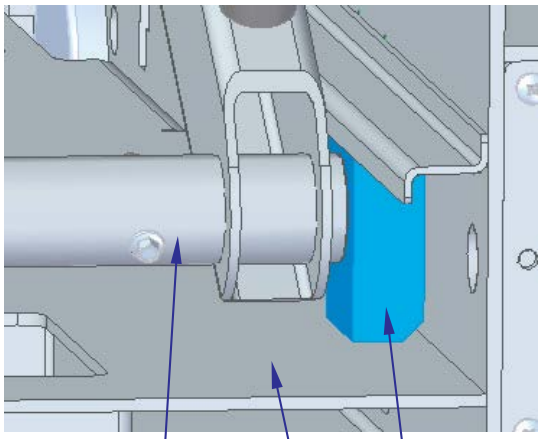

a) wear pad
b) arm cross tube
c) chassis deck

2) Inspection of the Condition of the Electric Cylinder

- Tools will be required to perform this procedure.
- New parts will be required to perform this procedure.
- Dealer service will be required to perform this procedure.

The Electric Cylinder being in good condition is essential to machine performance and service life. The Electric Cylinder when not lubricated fully will influence machine performance which combined with continued use can result in the Electric Cylinder being damaged. This operation should be carried out more frequently under severe working conditions.

If the Electric Cylinder sends out abnormal sound, please add the lubricating grease promptly.

1. Raise the platform to the position where the fat-liquoring port exposes completely.
2. Disconnect the battery pack from the machine, and let the machine stand for an hour at last.
3. Remove the plug from the fat-liquoring port.
4. Add moderate lubricating grease.
5. Clean the spilled lubricating grease.
6. Install the battery pack, then raise and descend the platform some times. Inspect the condition of the machine.

Lubricating Grease Type	Mobil SHC22

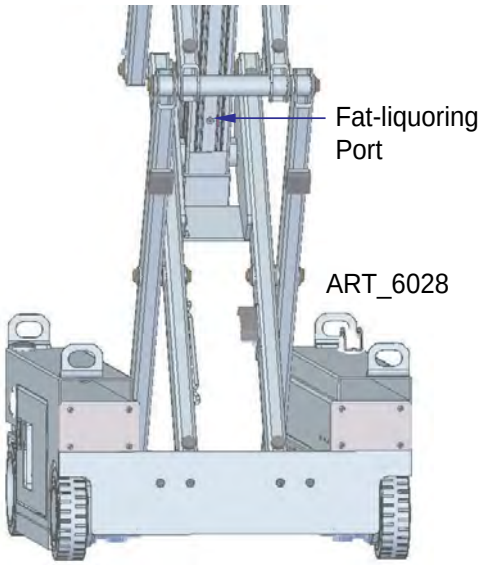

Calibrations

Calibrations

Calibration must be done to ensure proper and safe operation. Each calibration section explains the nature of the calibration and when it should be performed.

Tilt Sensor Calibration

ILLUSTRATION No.
ART_6090A

The Tilt Sensor monitors chassis level. The maximum X-axis tilt angle is 1.5°, the maximum Y-axis direction is 3°.

When the machine is raised, the tilt sensor will monitor the angle value of the chassis in real time. If the tilt angle of the chassis exceeds max tilt angle, the alarm will sound and functions will stop.

Calibration must be performed when the Level Sensor indication is not accurate or after replacing it.

Calibrate Tilt Sensor

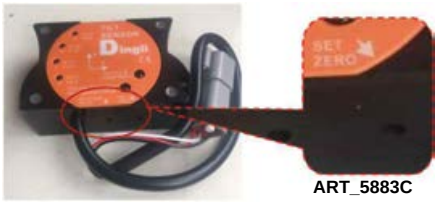

ART_5883C

1. Drive the machine onto level ground.
2. Find the reset button on the side of the sensor: “SET ZERO“.
3. Press and the hold the “SET ZERO“button until the indicator light flashes alternatively between red and green.
4. Press the “SET ZERO“button 3 times in a row, then the indicator light will stop flashing and the green light stays on.
5. Calibration is complete.

ILLUSTRATION No.
ART_6090B

Angle Sensor Calibration

The Angle Sensor is located on the linkage beam, it monitors the height of the platform by monitoring the angle of the linkage beam in real time.

Angle Sensor Calibration must be performed in conjunction with Load Calibrations or after sensor replacement.

Calibrate Angle Sensor

ILLUSTRATION No.
ART_6090C

1. Refer to the picture to the right and lift the platform halfway. To ensure that the platform is lifted halfway up, lift the platform until the distance between the beams is 12.5 inches or 317mm.
2. Press and the hold the “SET ZERO“button until the indicator light flashes alternatively between red and green.
3. Press the “SET ZERO“button 3 times in a row, then the indicator light will stop flashing and the green light stays on.
4. Calibration is complete.

Maximum Height Calibration

ILLUSTRATION No.
ART_6090D

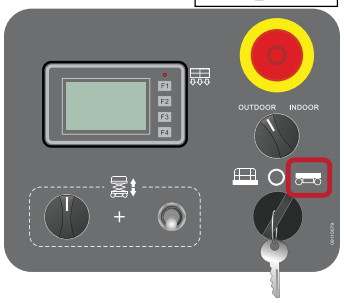

1. Lift up the platform to highest height, then push “red emergency stop button” on PCU.
2. Turn the key switch to ground-control.

ILLUSTRATION No.
ART_6090E

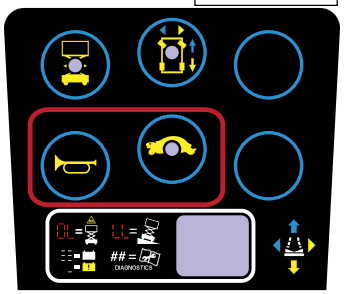

3. On the PCU, press and hold the “horn” and “turtle” buttons, then pull out the “red emergency stop button” . When the PCU displays CL, the machine has entered the calibration mode.
4. Press and hold the “turtle” button, the PCU display will show a flashing “Id”, when the “Id” stops flashing, the calibration is complete. Release the turtle button.

Load Sensor Calibration

ILLUSTRATION No.
ART_6090F

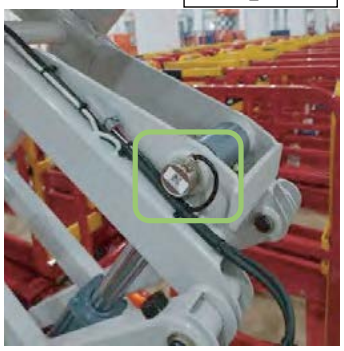

Load Sensor is located in the upper pin of the electric actuator. It can accurately detect the change of the load, thus ensuring the safety of construction. The load signal transmits to lift motor controller “P08” terminal.

Note: During the load calibration processes, the platform will raise and lower 3 times. Therefore, the machine must be placed where overhead obstruction height is 14 feet or higher

Load Calibration must be performed after the following happens:

- When the overload system is not operating correctly.
- After replacement of the Steering Motor Controller.
- After Steering Calibration.
- After replacement of the Load Sensor.

No-load Calibration

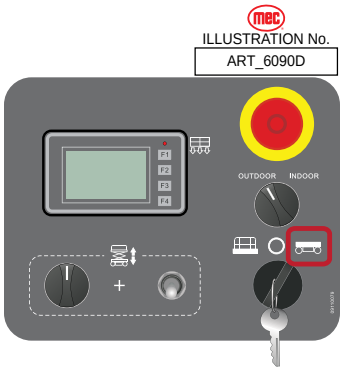

1. The platform must be completely empty before proceeding with No-Load Calibration.
2. Turn the key switch to ground-control, and pull out the “red emergency stop button” on ground control panel.
3. Bring the PCU to the side of the machine where it can be operated outside the platform.

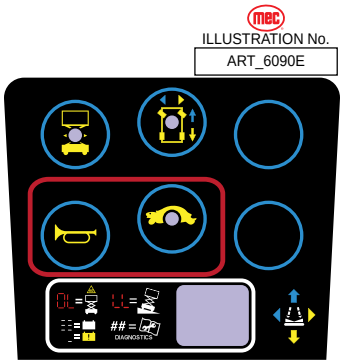

4. On the PCU, press and hold the “horn” and “turtle” buttons, then pull out the “red emergency stop button”. When the PCU displays L or CL, the machine has entered the load calibration mode.
5. Press and hold the “lift” button, the PCU display will show a flashing “nL”. The machine will lift and lower 3 times. When the “nL” stops flashing, it means the calibration is complete.

Full-load Calibration

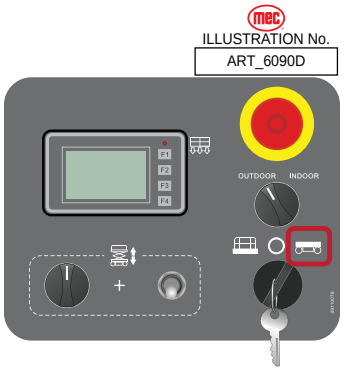

1. Put a rated load on the platform.
2. Turn the key switch to ground-control, and pull out the “red emergency stop button” of ground control panel.
3. Bring the PCU to the side of the machine where it can be operated outside the platform.

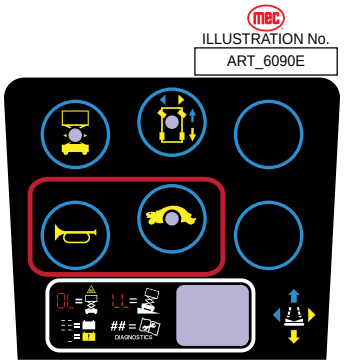

4. Press and hold the “horn” and “turtle” buttons, then pull out the “red emergency stop button” of PCU. When the PCU display shows L or CL, it means that the machine has entered the calibration mode.
5. Press and hold the “drive” button, the PCU display will show a flashing “FL”. The machine will lift and lower 3 times. When the “FL” stops flashing, it means the calibration is complete.

Steer Sensor Calibration

The Steer Sensors are located inside each of the steering Actuators. They ensure accurate wheel position while steering.

Steer Sensor Calibration must be performed when the front wheels do not align or after the replacement of any steering component or Steering Motor Controller.

Access the Display Module located on the right side of the chassis. Turn Key to Platform position.

1. Press F2 button to access pass code screen. Enter 3211. The display will show “Wheel Calibration-LR”.
2. Steer fully to the Left using the steer button on the joystick, both wheels must reach full left steer. Press the L (F1) button to calibrate the Left position.

3. Steer fully to the Right using the steer button on the joystick, both wheels must reach full right steer. Press the R (F2) button to calibrate the right position.

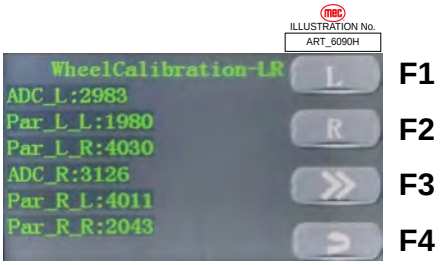

Fault Codes

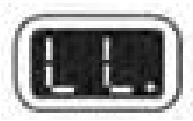
Art_5533

The LED readout screen displays fault codes that provide information about the machine operating status and about malfunctions. The fault codes listed in the following charts describe malfunctions and can aid in troubleshooting the machine by pinpointing the area or component affected.

List of Fault Codes		
Display	**Description**	**Lift Reaction**
01 System Initialization Fault	System Initialization Fault	Disables All Motion
02 System Communication Fault	System Communication Fault	Disables All Motion
03 Invalid Option Setting Fault	Invalid Option Setting Fault	Disables All Motion
04 Calibration Incomplete	Calibration Incomplete	Warning Only
05 Left MC Fault	Left MC Fault	Disables All Motion
06 Right MC Fault	Right MC Fault	Disables All Motion
07 Lift MC Fault	Lift MC Fault	Disables All Motion
08 Steer MC Fault	Steer MC Fault	Disables All Motion
09 Left MC Communication Fault	Left MC Communication Fault	Disables All Motion
10 Right MC Communication Fault	Right MC Communication Fault	Disables All Motion
11 Pump MC Communication Fault	Pump MC Communication Fault	Disables All Motion
12 Steer MC Communication Fault	Steer MC Communication Fault	Disables All Motion
13 Chassis Up or Down Switch ON	Chassis Up or Down Switch ON	Disables All Motion
14 Load Sensor Communication Fault	Load Sensor Communication Fault	Disables All Motion
18 Pothole Guard Fault	Pothole Guard Fault	Disable Lifting and Driving
31 Load Sensor Fault	Load Sensor Fault	Disables All Motion
32 Angle Sensor Fault	Angle Sensor Fault	Disables All Motion
36 Low Battery Limp	Low Battery Limp	Drive speed limit
37 Battery Sleep	Battery Sleep	Warning Only
42 Platform Left Button ON	Platform Left Button ON	Warning Only
43 Platform Right Button ON	Platform Right Button ON	Warning Only
46 Platform Enable Button ON	Platform Enable Button ON	Disable Platform Control

The following codes are retrieved from the ECU Display only.		
Display	**Description**	**Lift Reaction**
47 Joystick Not In Neutral	Joystick Not In Neutral	Drive speed limit
68 Battery Low Voltage Fault	Battery Low Voltage Fault	Disables All Motion
80 Platform Load is over 80%	Platform Load is over 80%	Warning Only
90 Platform Load is over 90%	Platform Load is over 90%	Warning Only
99 Platform Load is over 99%	Platform Load is over 99%	Warning Only
100 Machine Inclined	Machine Inclined	Disable Lifting and Driving
100 Platform Overloaded	Platform Overloaded	Disable All Motion
101 Restore Parameters to Default	Restore Parameters to Default	Warning Only
102 Battery is draining	Battery is draining	Battery is draining

List of Fault Codes (Motor Controller)	
Display	**Description**
1037	Contactor Closed
1038	Contactor Open
1060	Capacitor Charge
1062	TH. Protection
1065	Motor Temperat.
1066	Battery Low
1080	Forward and backward
1153	Encoder Error
1175	Speed FB. Error
1177	EB. Coil Short
1178	Motor Temp. Stop
1180	Overload
1196	Motor Phase Short
1200	Vdc Off Shorted
1202	Vdc Link Overv.
1207	Motor Phase Open
1211	Stall Rotor
1212	Parameter Error
1216	EB. Coil Open
1218	Sens Mot Temp KO
1220	Vkey Off Shorted
1223	Contactor Coil Short
1227	Current Sensor Fault
1229	Hard Fault
1230	Contactor Coil Open
1248	No CAN Msg.
2037	Contactor Closed
2038	Contactor Open
2060	Capacitor Charge
2062	TH. Protection
2065	Motor Temperat.
2066	Battery Low
2080	Forward and backward
2153	Encoder Error
2175	Speed FB. Error
2177	EB. Coil Short
2178	Motor Temp. Stop
2180	Overload
2196	Motor Phase Short
2200	Vdc Off Shorted
2202	Vdc Link Overv.
2207	Motor Phase Open
2211	Stall Rotor
2212	Parameter Error

List of Fault Codes (Motor Controller)	
Display	**Description**
2216	EB. Coil Open
2218	Sens Mot Temp KO
2220	Vkey Off Shorted
2223	Contactor Coil Short
2227	Current Sensor Fault
2229	Hard Fault
2230	Contactor Coil Open
2248	No CAN Msg.
3037	Contactor Closed
3038	Contactor Open
3060	Capacitor Charge
3062	TH. Protection
3065	Motor Temperat.
3066	Battery Low
3080	Forward and backward
3153	Encoder Error
3175	Speed FB. Error
3177	EB. Coil Short
3178	Motor Temp. Stop
3180	Overload
3196	Motor Phase Short
3200	Vdc Off Shorted
3202	Vdc Link Overv.
3207	Motor Phase Open
3211	Stall Rotor
3212	Parameter Error
3216	EB. Coil Open
3218	Sens Mot Temp KO
3220	Vkey Off Shorted
3223	Contactor Coil Short
3227	Current Sensor Fault
3229	Hard Fault
3230	Contactor Coil Open
3248	No CAN Msg.
4038	Main Contactor Open
4062	TH. Protection
4180	Overload
4202	Over Voltage Fault
4211	Stall Rotor
4220	Low Voltage Fault
4229	Hard Fault
5180	Overload
5211	Stall Rotor

Charger Fault code list		
Fault code	**Fault Cause**	**Remark (Internal personnel analysis)**
E01 bAt	The battery is not well connected or battery reversely connected or battery damage	The battery pack voltage is less than 3V
E02 AC	Abnormal AC Power Input (Voltage)	< 85 VAC or > 270 VAC
E03 Hot	Charger High Temperature Protection	> 95°C
E04 bAt	Battery High Temperature Protection	> 65°C
E05 Err	Output Current is too large	> (Rated current + 3) A
E06 bAt	Battery Voltage is too high	3V/Cell
E07	CAN_ID conflict	
E08	The software runs incorrectly and the pointer overflows	The curve parameter is wrong
E10	Relay closure timeout	20 minutes timeout
E11	Single battery failure	Charge for 2 hours, voltage < 2V/Cell
E91	TmainI timeout	Hoppecke battery Specific Code (Battery factory requirements)
E92	Capacity overflow error	
E93	Charging timeout	
E94	Low battery voltage	
E96	Pre-charge error	
U01	Failed to open directory	
U02	File calibration error	
U03	File does not match the machine	
U04	Comprehensive error	
U05	Need to re-flash	
U06	Indicates that the USB is locked	

Charger Warning Code List		
Warning Code	**Fault Cause**	**Remark**
INI	HP battery low voltage wait 10 minutes	Not Used
bns	BMS Control mode Battery Management Control for Lithium-ion Batteries	Check battery temperature, connections.
Het	BMS Request heating of the Lithium-ion battery	Heat Batteries before charging

Electrical Schematic

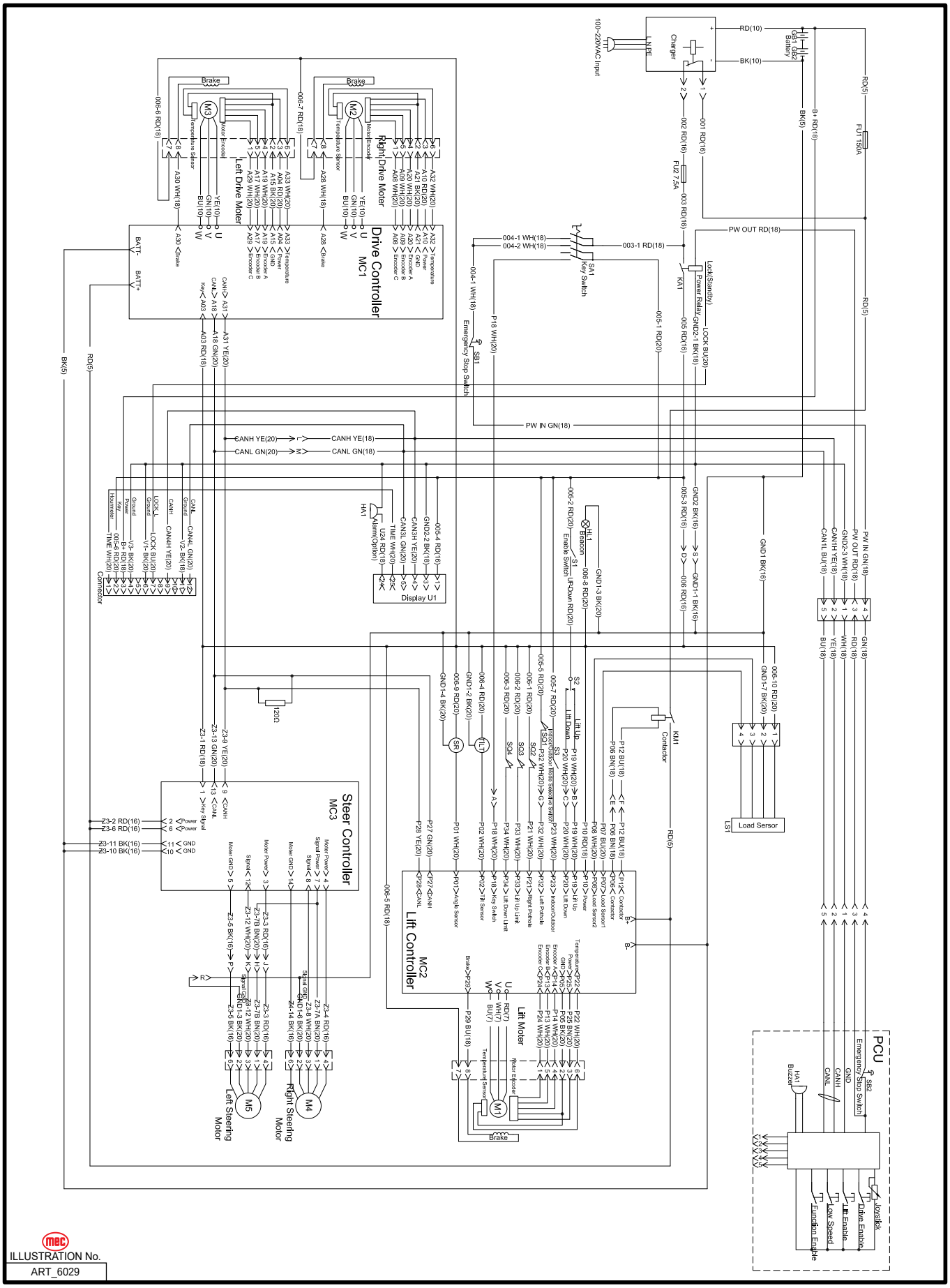

ILLUSTRATION No.
ART_6029

Parts Introduction

This Parts sections consists of illustrated parts sections and is designed to provide you, the customer, with illustrations and the list of associated parts needed to properly maintain the MEC self-propelled aerial work platform. When used in conjunction with the Service section in this manual and the Operator's Manual (provided separately), this manual will assist you in making necessary adjustments and repairs, and identifying and ordering the correct replacement parts.

All parts represented here are manufactured and supplied in accordance with MEC quality standards.

We recommend that you use genuine MEC parts to ensure proper operation and reliable performance.

To obtain maximum benefits from your MEC Aerial Work Platforms, always follow the proper operating and maintenance procedures. Only trained authorized personnel should be allowed to operate or service this machine. Service personnel should read and study the Operator's, and the Service and Parts Manuals in order to gain a thorough understanding of the unit prior to making any repairs.

Steer Linkage and Wheels Assembly

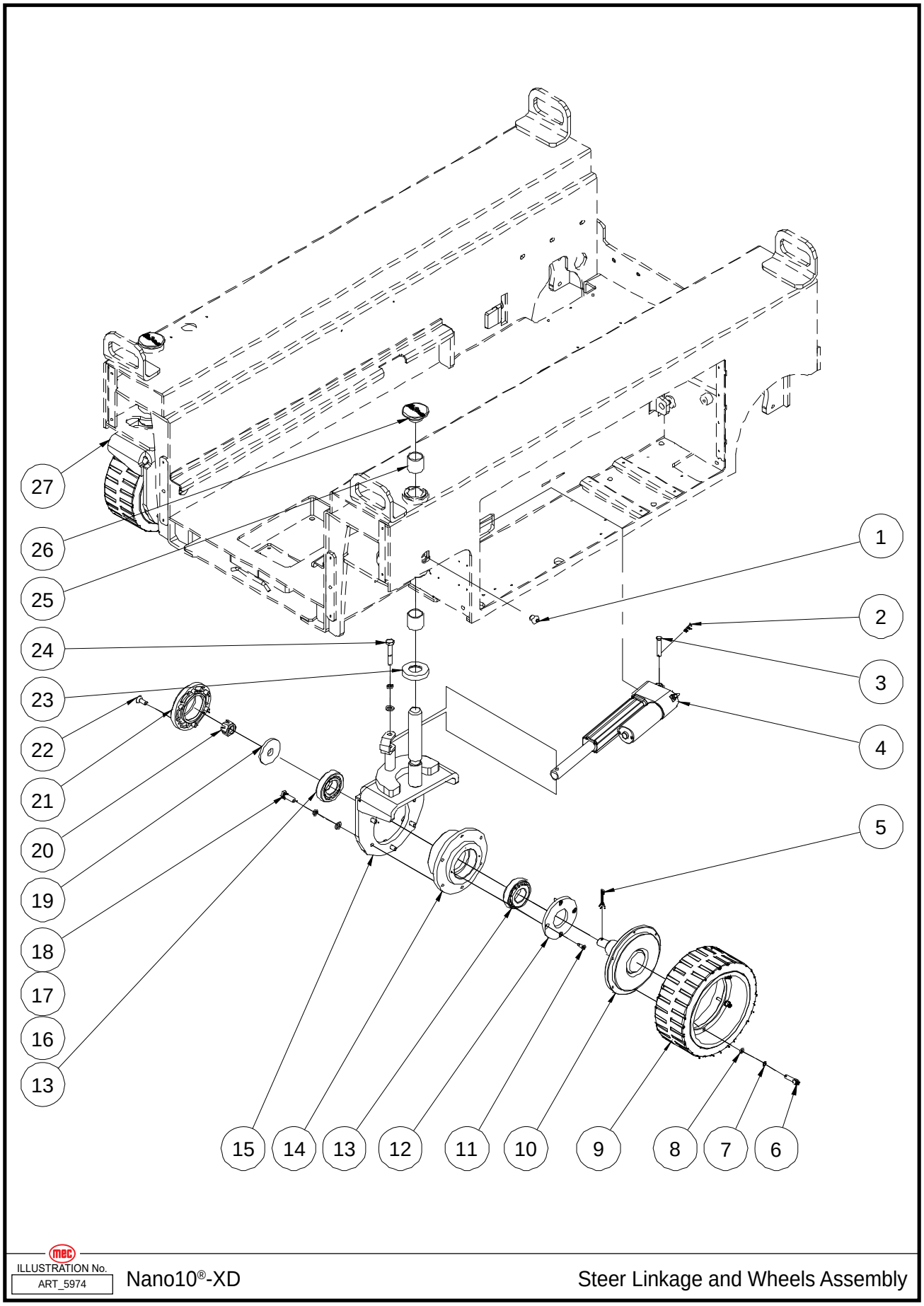

Item	Part Number	Description	Qty.
1	46540	Screw	2
2	46541	Cotter Pin	2
3	46542	Pin	2
4	46543	Electric Cylinder Unit	2
5	41322	Cotter Pin	2
6	53123	Screw SHCS M06-1.00 × 25	12
7	53046	WSHR M06 Spring Washer	12
8	50000	WSHR M06 Standard Flat Washer	12
9	46544	Wheel	2
10	46545	Spindle	2
11	53269	Screw CSCS M05-0.80 × 16	8
12	41230	Bearing Cover	2
13	41024	Bearing	4
14	46546	Connection Plate	2
15	46547	Steer Yoke Weldment	1
16	50001	WSHR M08 Standard Flat Washer	14
17	53055	WSHR M08 Spring Washer	14
18	50031	Screw HHCS M08-1.25 × 25	12
19	41327	Washer	2
20	53347	Castle Nut M16 × 1.50	2
21	41328	Cap	2
22	53282	Screw CSCS M08-1.25 × 20	12
23	46548	Washer	2
24	50015	Screw HHCS M08-1.25 × 50	2
25	46549	Bearing	4
26	46550	Cover	2
27	46551	Steer Yoke Weldment	1

Drive Wheel Assembly

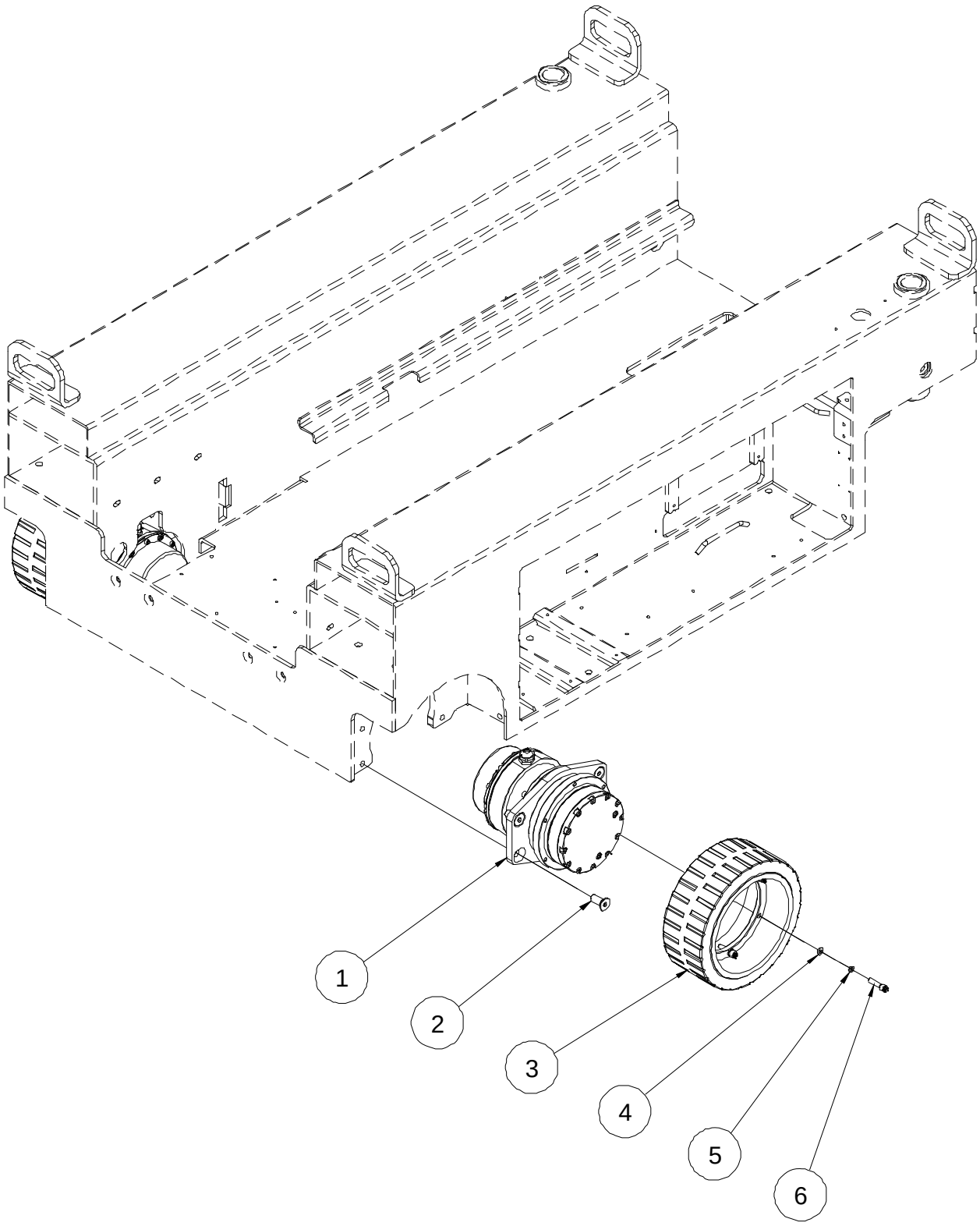

ILLUSTRATION No.
ART_5975

Nano10®-XD

Drive Wheel Assembly

Item	Part Number	Description	Qty.
1	46552	Drive Motor Assembly	2
--	46553	Reducer	1
--	46554	Motor	1
--	46555	Brake	1
2	53483	Screw CSCS M10-1.50 × 25	8
3	46544	Wheel	2
4	50000	WSHR M06 Standard Flat Washer	12
5	53046	WSHR M06 Spring Washer	12
6	53123	Screw SHCS M06-1.00 × 25	12

Pothole Protection Assembly

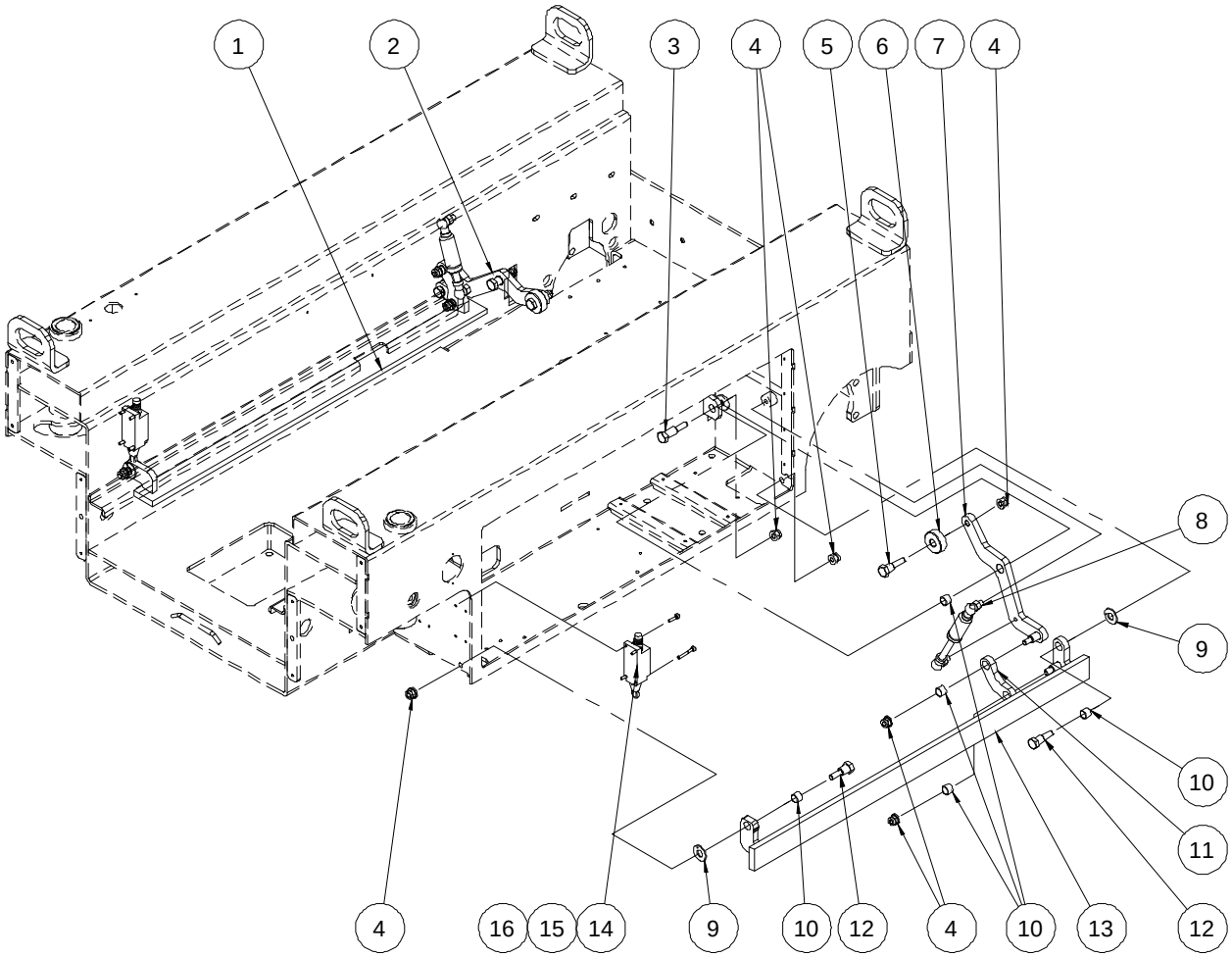

ILLUSTRATION No.
ART_5976

Nano10®-XD

Pothole Protection Assembly

Item	Part Number	Description	Qty.
1	46556	Pothole Guard Weldment	1
2	46557	Linkage Weldment	1
3	46558	Pin	2
4	50313	Nut NNYL M08-1.25 Flange	12
5	46559	Pin	2
6	46560	Roller	2
7	46561	Linkage Weldment	1
8	46562	Gas Shock	2
9	46563	Bearing	4
10	46564	Bearing	10
11	46565	Pothole Link Plate	2
12	46566	Pin	4
13	46567	Pothole Guard Weldment	1
14	41197	Limit Switch	2
15	53065	Screw SHCS M04-0.70 × 30	4
16	53113	Screw SHCS M04-0.70 × 16	4

Right Tray Assembly

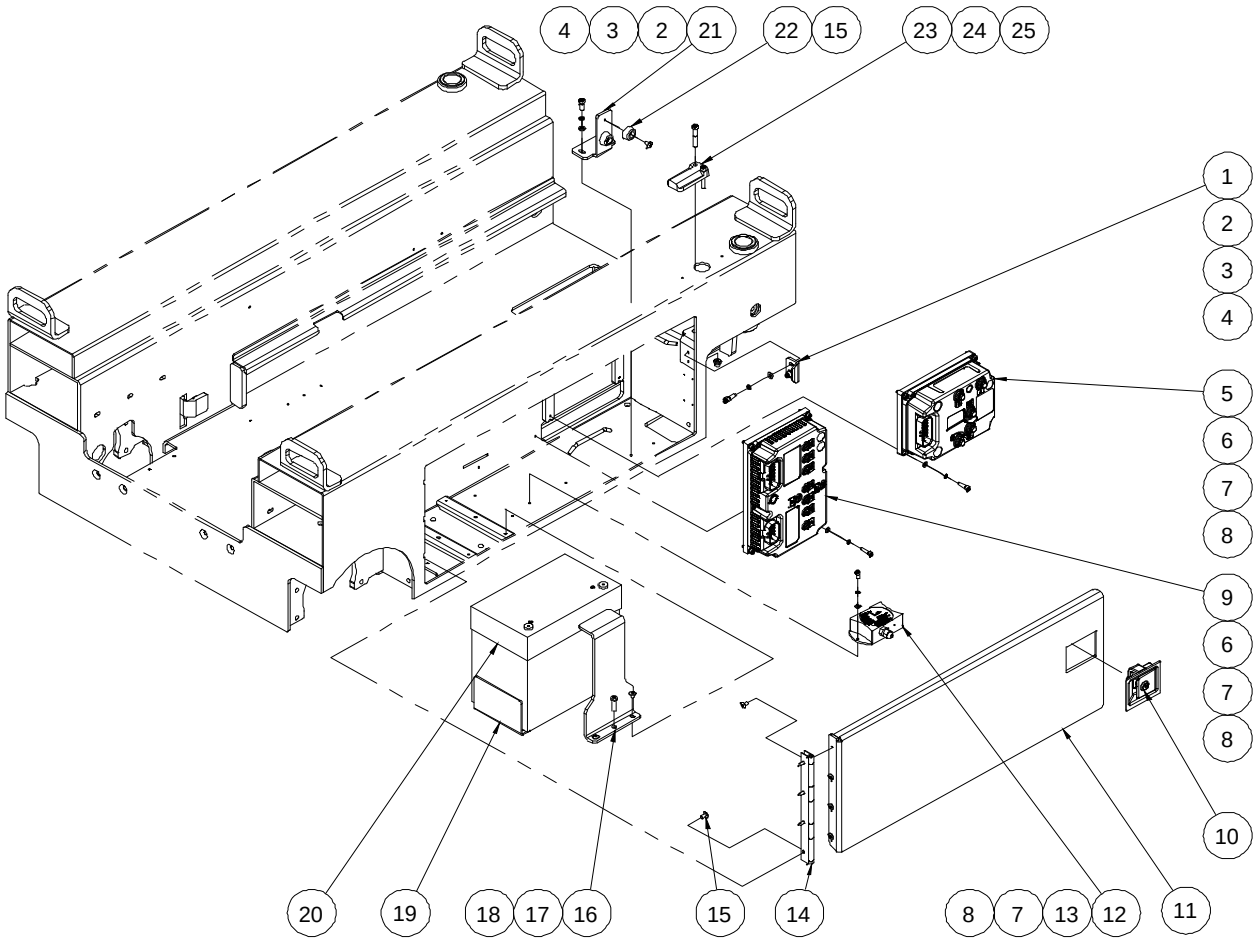

ILLUSTRATION No. ART_5977 Nano10®-XD Right Tray Assembly

Item	Part Number	Description	Qty.
1	46568	Lock Clasp	1
2	53138	Screw SHCS M06-1.00 × 16	4
3	53046	WSHR M06 Spring Washer	6
4	50000	WSHR M06 Standard Flat Washer	6
5	46569	Motor Controller	1
6	53150	Screw SHCS M05-0.80 × 20	8
7	53043	WSHR M05 Spring Washer	11
8	53038	WSHR M05 Standard Flat Washer	11
9	46570	Motor Controller	1
10	46571	Latch	1
11	46572	Side Door 1	1
12	41098	Tilt Sensor	1
13	53173	Screw SHCS M05-0.80 × 10	2
14	46573	Hinge	1
15	53265	Screw THMS M05-0.80 × 10	10
16	46605	Locating Plate 2	1
17	53451	Screw THMS M05-0.80 × 8	4
18	53353	Screw PHMS M06-1.00 × 25	2
19	46574	Locating Plate	2
20	46575	Battery	1
21	46576	Plate	1
22	41120	Bumper	2
23	46577	Spacer	1
24	53125	Screw SHCS M06-1.00 × 40	2
25	50568	Nut NNYL M06-1.00 Flange	2

Left Tray Assembly

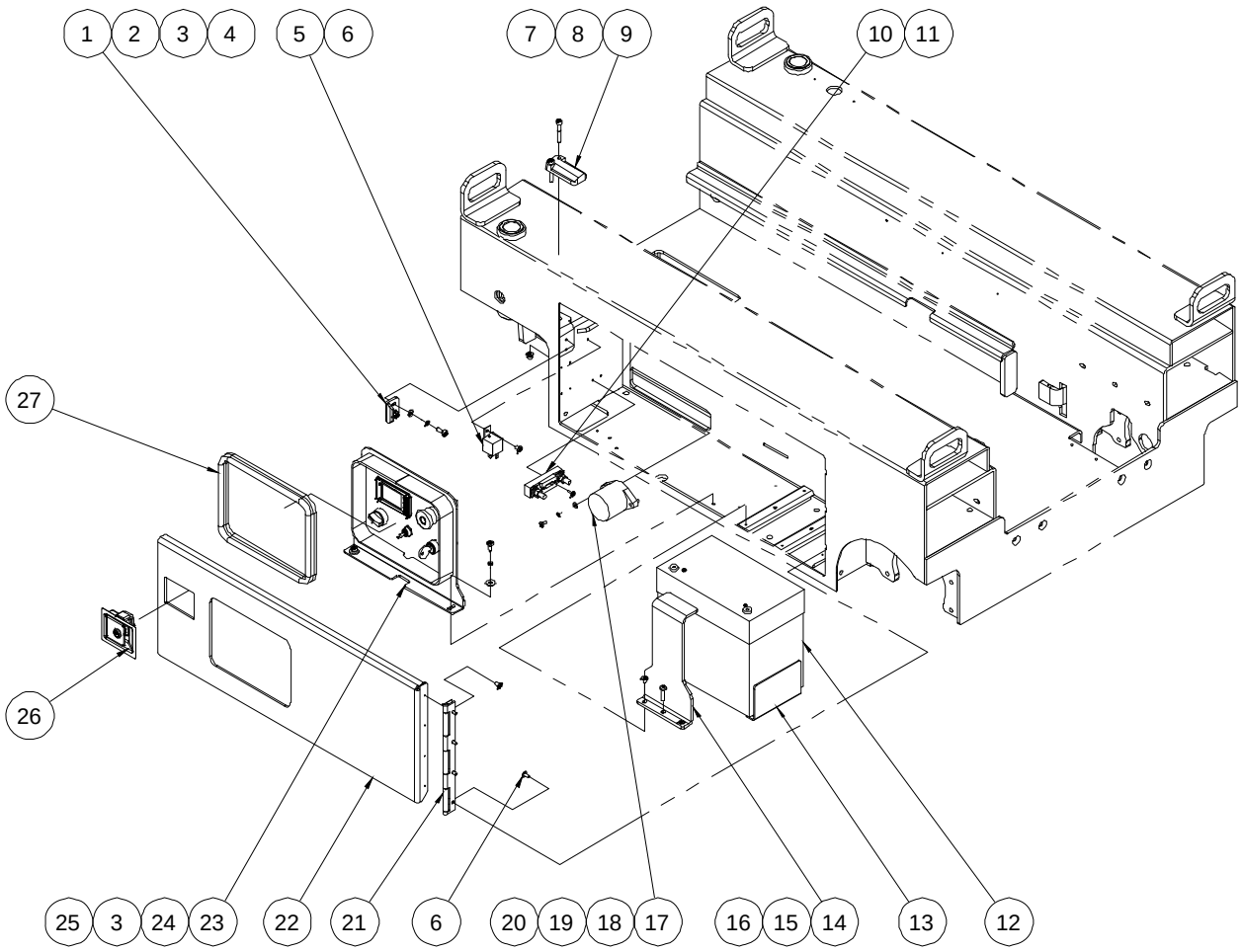

ILLUSTRATION No. ART_5978 Nano10®-XD Left Tray Assembly

Item	Part Number	Description	Qty.
1	46568	Lock Clasp	1
2	53138	Screw SHCS M06-1.00 × 16	2
3	53046	WSHR M06 Spring Washer	4
4	50000	WSHR M06 Standard Flat Washer	2
5	41334	Relay	1
6	53265	Screw THMS M05-0.80 × 10	9
7	53125	Screw SHCS M06-1.00 × 40	2
8	50568	Nut NNYL M06-1.00 Flange	2
9	46577	Spacer	1
10	41251	150A Fuse Assembly	1
--	44031	150A Fuse	1
--	41092	Fuse Seat	1
11	53284	Screw THMS M04-0.70 × 12	2
12	46575	Battery	1
13	46574	Locating Plate	2
14	46605	Locating Plate 2	1
15	53451	Screw THMS M05-0.80 × 8	4
16	53353	Screw PHMS M06-1.00 × 25	2
17	46578	DC Contactor	1
18	53354	Screw PHMS M05-0.80 × 10	2
19	53038	WSHR M05 Standard Flat Washer	2
20	53043	WSHR M05 Spring Washer	2
21	46573	Hinge	1
22	46579	Side Door 2	1
23	REF	Ground Control Assembly (Refer to page 44)	1
24	53380	Screw SHCS M06-1.00 × 12	2
25	50068	WSHR M06 Flat Fender Washer	2
26	46571	Latch	1
27	46580	Rubber Strip	1

Ground Control Assembly

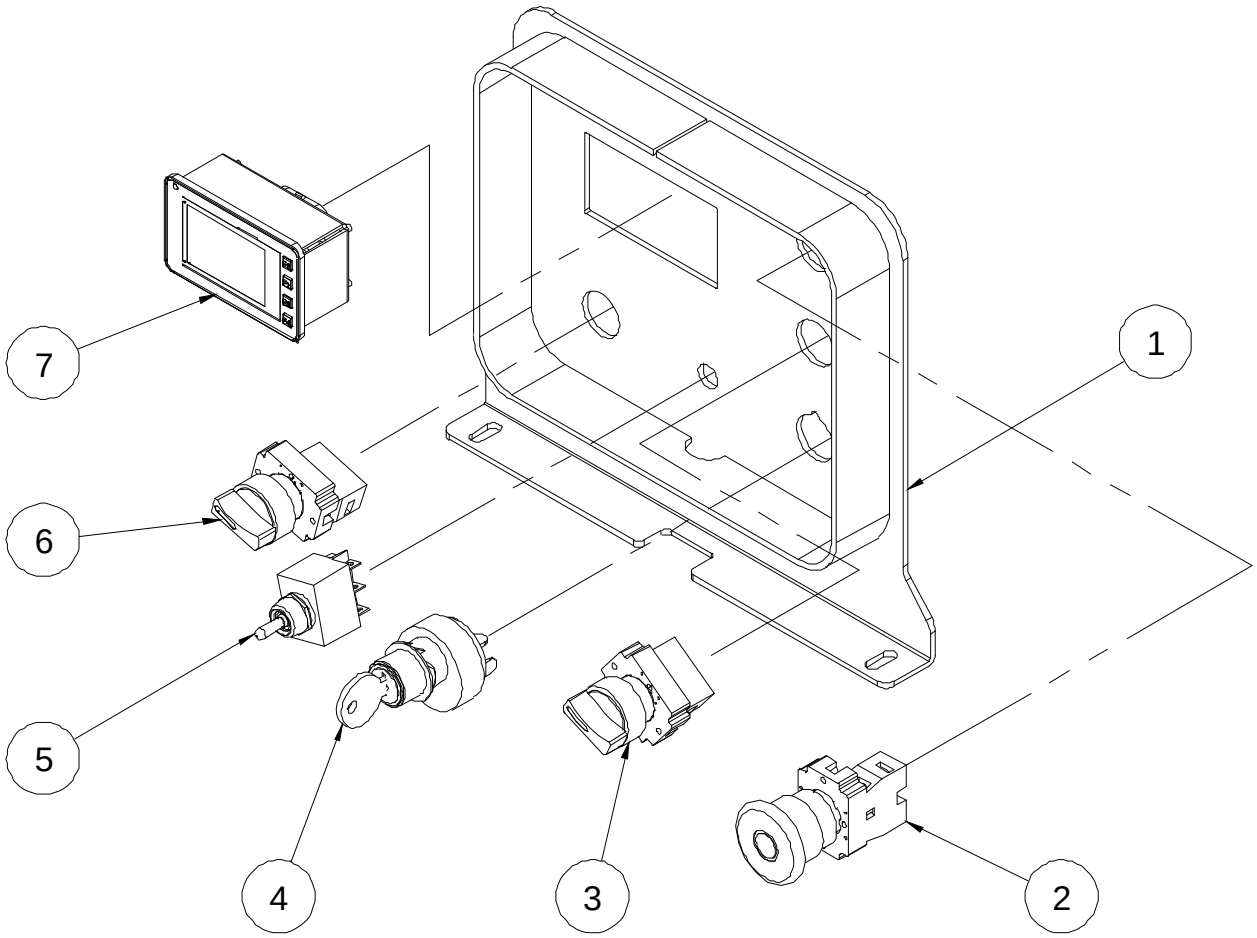

ILLUSTRATION No. ART_5979 Nano10®-XD Ground Control Assembly

Item	Part Number	Description	Qty.
1	46581	Ground Control Panel Weldment	1
2	41422	Emergency Stop Switch	1
3	46755	Select Switch	1
4	41418	Key Switch	1
5	41419	Toggle Switch	1
6	46582	Select Switch	1
7	46583	Display	1

Charger and Accessories, To Serial # 18000174

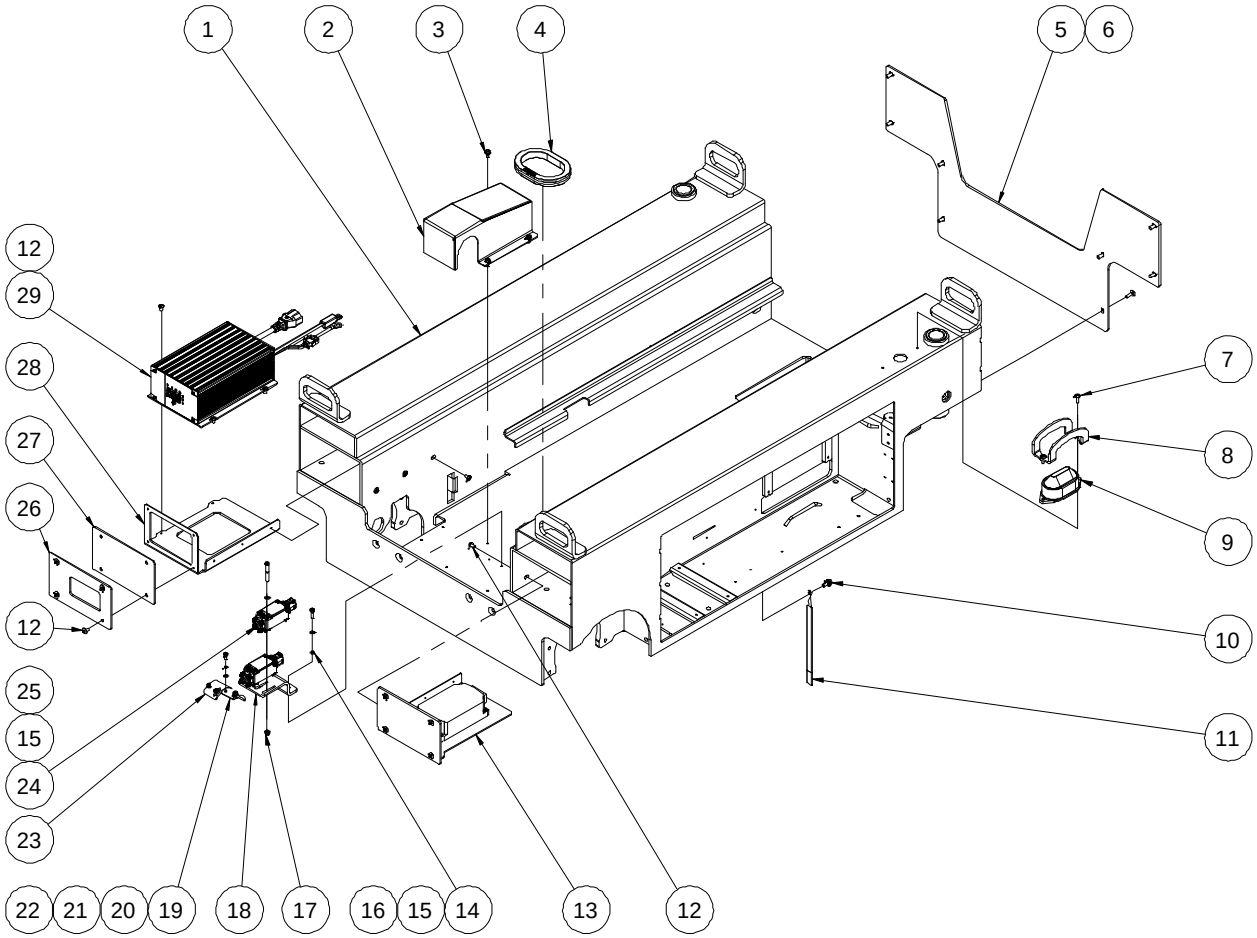

ILLUSTRATION No. ART_5980 Nano10®-XD Charger and Accessories

Item	Part Number	Description	Qty.
1	46584	Frame Weldment	1
2	45269	Cover	1
3	53449	Screw HHCS M05-0.80 × 10 Flange	4
4	41001	Sheath	1
5	46586	Cover	1
6	53231	Screw PHMS M06-1.00 × 16	8
7	53223	Screw THMS M05-0.80 × 16	2
8	41309	Beacon Cover	1
9	46264	Beacon	1
10	53273	Screw HHCS M06-1.00 × 14 Serrated Flange	1
11	41003	Ground Strap	1
12	53265	Screw THMS M05-0.80 × 10	14
13	REF	Motor Controller Assembly (Refer to page 50)	1
14	53043	WSHR M05 Spring Washer	3
15	53038	WSHR M05 Standard Flat Washer	6
16	50359	Screw SHCS M05-0.80 × 16	2
17	53281	Nut NNYL M05-0.80 Flange	4
18	47389	Switch Bracket	1
19	45268	Signal Plate 1	1
20	50284	WSHR M04 Standard Flat Washer	4
21	53062	WSHR M04 Spring Washer	4
22	50423	Screw SHCS M04-0.70 × 12	4
23	45267	Signal Plate 2	1
24	46265	Limit Switch	2
25	53067	Screw SHCS M05-0.80 × 40	4
26	46590	Cover 1	1
27	46591	Cover 2	1
28	46592	Charger Bracket	1
29	42904	Charger	1

Charger and Accessories, From Serial # 18000175

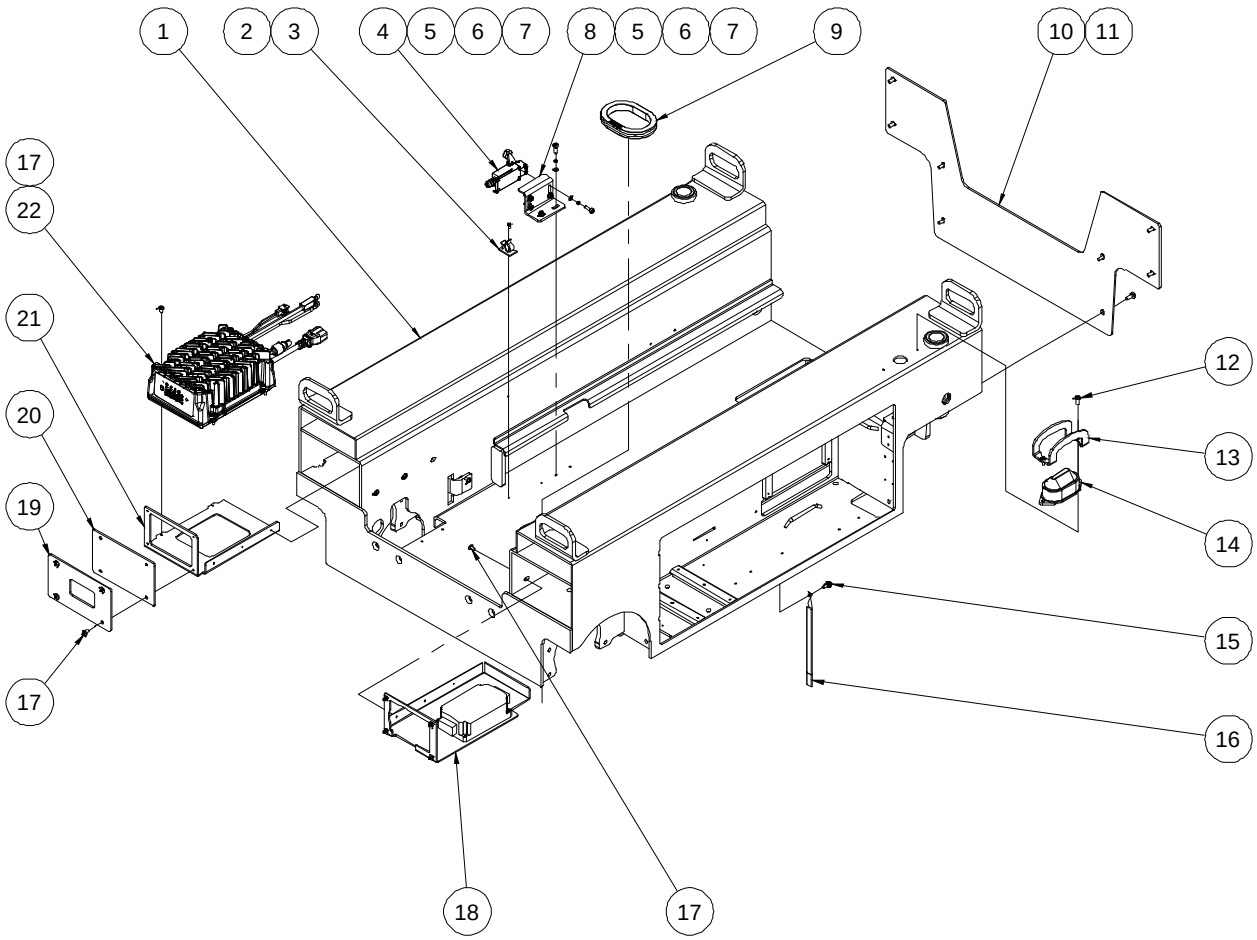

ILLUSTRATION No. ART_5980 Nano10®-XD Charger and Accessories

Item	Part Number	Description	Qty.
1	46584	Frame Weldment	1
2	53111	Screw CSCS M04-0.70 × 10	1
3	46585	Wire Clip	1
4	42074	Limit Switch	1
5	53038	WSHR M05 Standard Flat Washer	6
6	53043	WSHR M05 Spring Washer	6
7	50359	Screw SHCS M05-0.80 × 16	6
8	46587	Switch Bracket	1
9	41001	Sheath	1
10	46586	Cover	1
11	53231	Screw PHMS M06-1.00 × 16	8
12	53223	Screw THMS M05-0.80 × 16	2
13	41309	Beacon Cover	1
14	46264	Beacon	1
15	53273	Screw HHCS M06-1.00 × 14 Serrated Flange	1
16	41003	Ground Strap	1
17	53265	Screw THMS M05-0.80 × 10	14
18	REF	Motor Controller Assembly (Refer to page 50)	1
19	46590	Cover 1	1
20	46591	Cover 2	1
21	46592	Charger Bracket	1
22	42904	Charger	1

Motor Controller Assembly

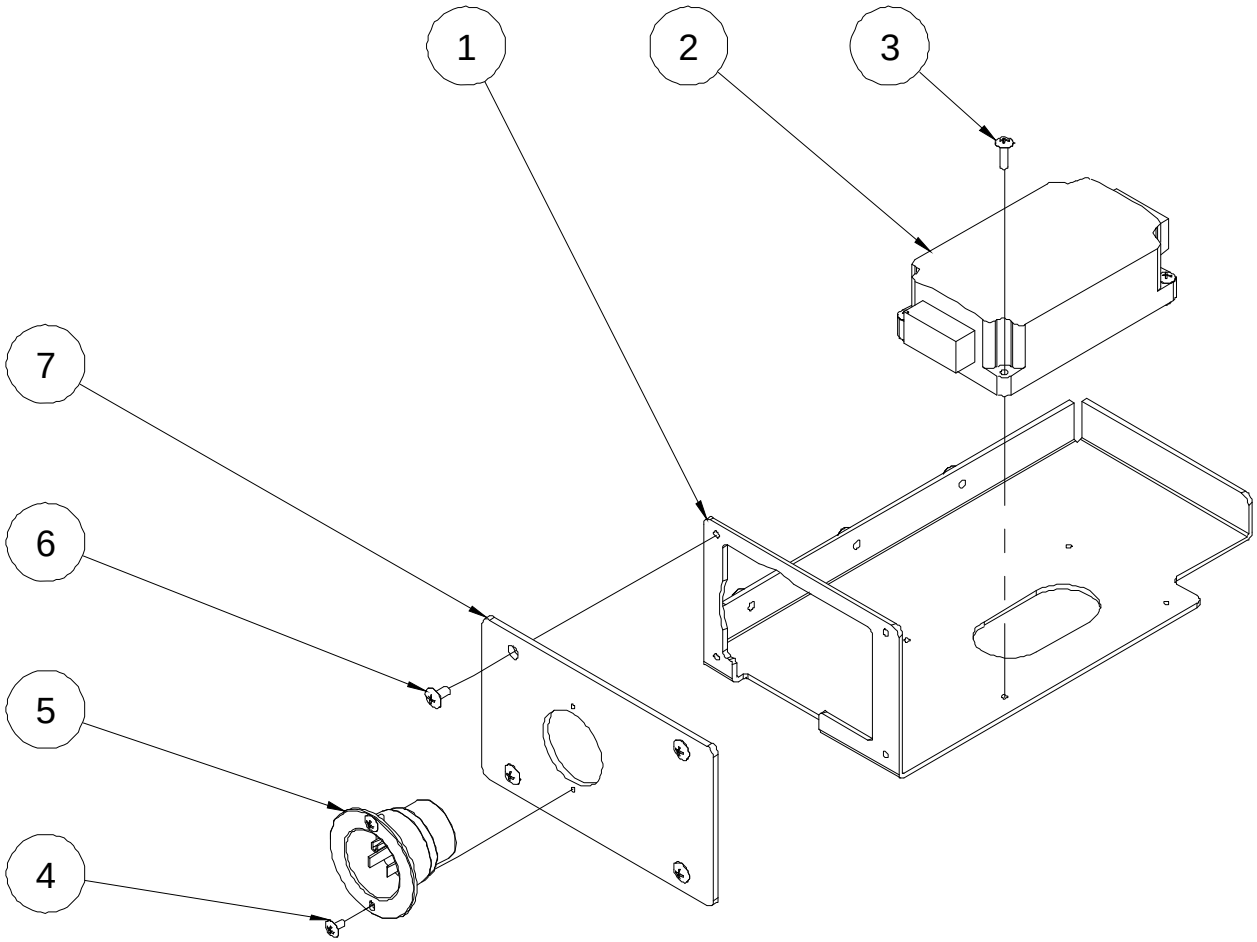

ILLUSTRATION No.
ART_5981

Nano10®-XD

Motor Controller Assembly

Item	Part Number	Description	Qty.
1	46593	Controller Bracket	1
2	46594	Motor Controller	1
3	53491	Screw THMS M04-0.70 × 16	4
4	53263	Screw THMS M04-0.70 × 8	2
5	41575	Plug	1
6	53265	Screw THMS M05-0.80 × 10	7
7	46588	Cover	1

Scissor Assembly

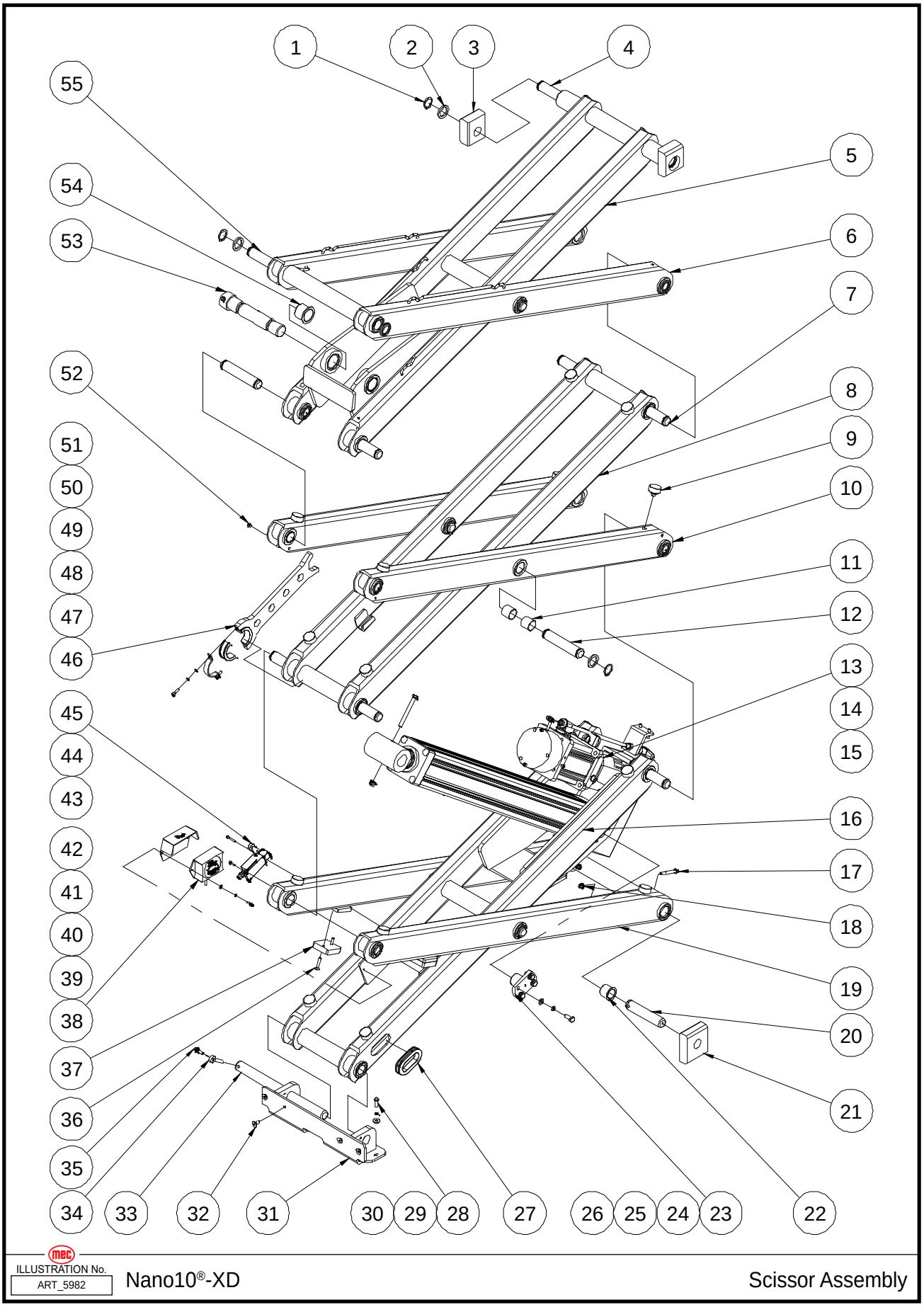

Item	Part Number	Description	Qty.
1	42437	Circlips	24
2	41354	Washer	24
3	46596	Platform Slider	2
4	46597	Pin	1
5	46598	Inner Arm 3	1
6	46599	Outer Arm 3	1
7	46600	Pin	4
8	46601	Inner Arm 2	1
9	46602	Block	16
10	46603	Outer arm 2	2
11	41287	Bearing	40
12	46604	Pin	6
13	REF	Electric Cylinder Assembly (Refer to page 56 and page 58)	1
14	50018	Screw HHCS M08-1.25 × 80	1
15	50313	Nut NNYL M08-1.25 Flange	1
16	46589	Inner Arm 1	1
17	53357	Screw HHCS M06-1.00 × 55 Flange	2
18	50568	Nut NNYL M06-1.00 Flange	2
19	46606	Outer Arm 1	1
21	46607	Pin	2
20	46608	Chassis Slider	2
22	42446	Bearing	16
23	46609	Pin	2
24	50030	Screw HHCS M08-1.25 × 20	8
25	53055	WSHR M08 Spring Washer	8
26	50001	WSHR M08 Standard Flat Washer	8
27	46610	Sheath	2
28	50028	Screw HHCS M06-1.00 × 20	2
29	50068	WSHR M06 Flat Fender Washer	2
30	53046	WSHR M06 Spring Washer	2
31	46611	Chassis Link Pivot Weldment	1
32	53434	Screw CSCS M08-1.25 × 16	4
33	46612	Pin	1
34	42449	Pin	1
35	53255	Screw HHCS M06-1.00 × 20 Serrated Flange	1
36	50560	Screw CSCS M06-1.00 × 30	4
37	46613	Pothole Pusher	2
38	41110	Angle Sensor	1
39	41111	Sensor Cover	1
40	50483	Screw SHCS M04-0.70 × 10	2
41	50284	WSHR M04 Standard Flat Washer	2
42	53062	WSHR M04 Spring Washer	2
43	53115	Screw SHCS M04-0.70 × 25	2
44	50423	Screw SHCS M04-0.70 × 12	2
45	42074	Limit Switch	1

46	46615	Safety Arm	1
47	46616	Clamp	1
48	46617	Safety Arm Bushing	2
49	50359	Screw SHCS M05-0.80 × 16	2
50	53038	WSHR M05 Standard Flat Washer	2
51	53043	WSHR M05 Spring Washer	2
52	46595	Cable Ties Fixing Seat	3
53	46619	Load Sensing Pin	1
54	41706	Bearing	2
55	46620	Pin	1

THIS PAGE HAS BEEN INTENTIONALLY LEFT BLANK.

Electric Cylinder Assembly, To Serial #18000024

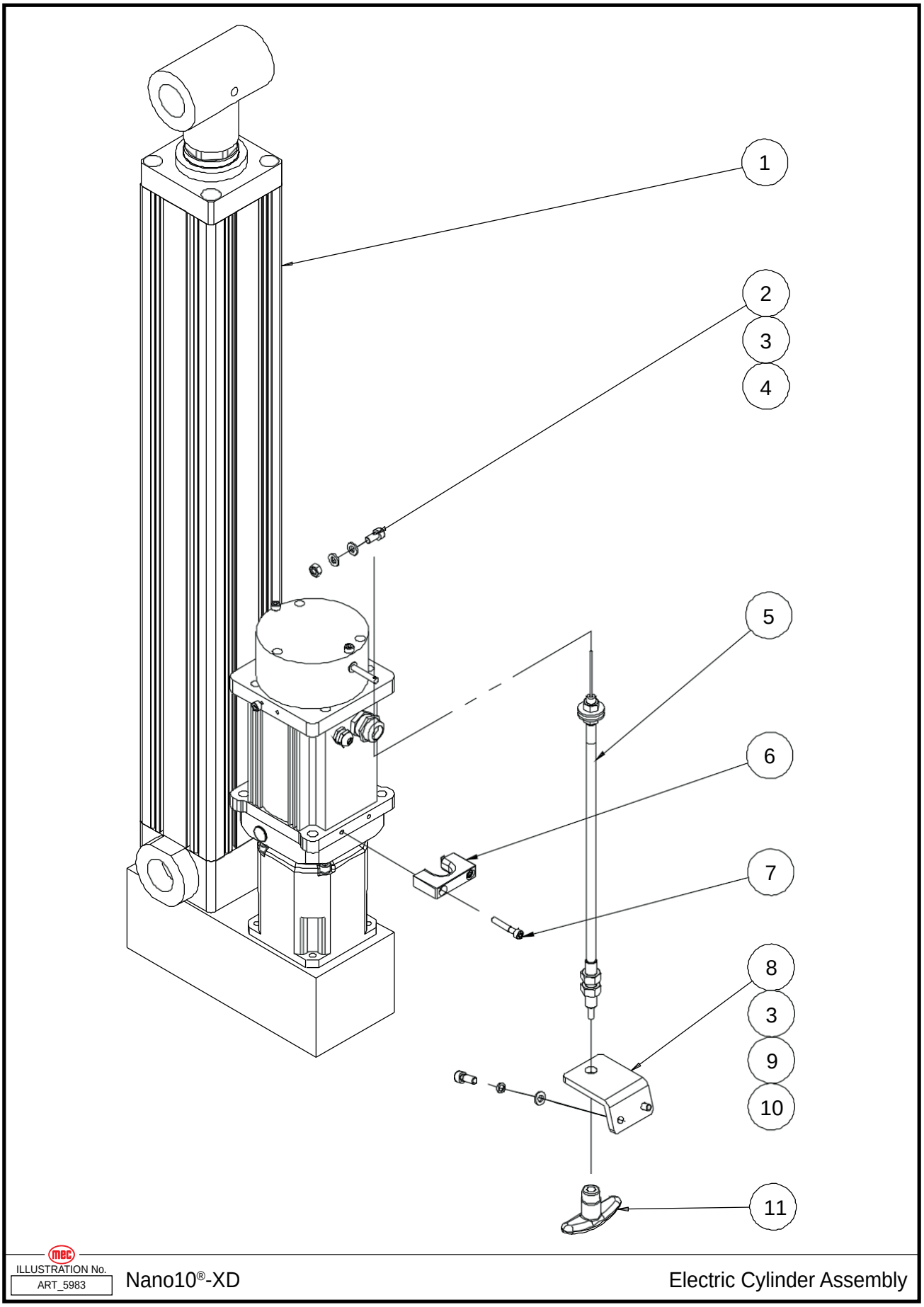

Item	Part No.	Description	Qty.
1	45279	Electric Cylinder Unit	1
--	45280	Electric Cylinder	1
--	45281	Reducer	1
--	45282	Motor	1
--	45283	Brake	1
2	42466	Screw	1
3	50000	WSHR M06 Standard Flat Washer	4
4	53361	Nut NHEX M06-1.00	1
5	47810	Emergency Down Cable Assembly	1
6	46623	Clamp	1
7	53171	Screw SHCS M05-0.80 × 30	2
8	46625	Bracket	1
9	53138	Screw SHCS M06-1.00 × 16	2
10	53046	WSHR M06 Spring Washer	2
11	41162	Lowering Knob	1

Electric Cylinder Assembly, From Serial #18000025

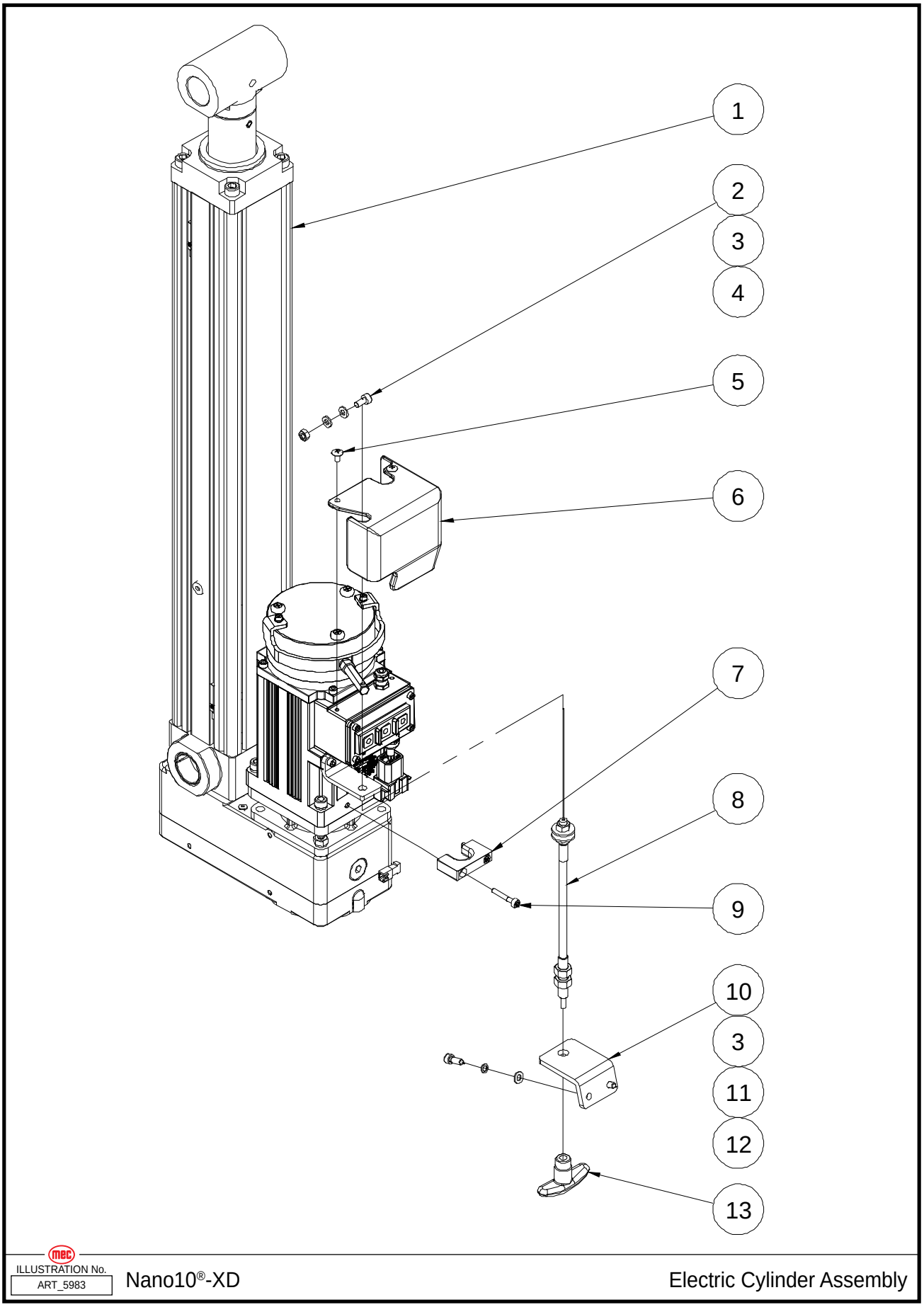

Item	Part No.	Description	Qty.
1	46621	Electric Cylinder Unit (Without brake)	1
--	47811	Electric Cylinder	1
--	47812	Reducer	1
--	47813	Motor	1
1	47814	Electric Cylinder Unit (With brake)	1
--	47811	Electric Cylinder	1
--	47815	Reducer	1
--	47813	Motor	1
2	42466	Screw	1
3	50000	WSHR M06 Standard Flat Washer	4
4	53361	Nut NHEX M06-1.00	1
5	53265	Screw THMS M05-0.80 × 10	3
6	47816	Motor Cover	1
7	46623	Clamp	1
8	46624	Emergency Down Cable Assembly	1
9	53171	Screw SHCS M05-0.80 × 30	2
10	46625	Bracket	1
11	53046	WSHR M06 Spring Washer	2
12	53138	Screw SHCS M06-1.00 × 16	2
13	41162	Lowering Knob	1

Platform Assembly

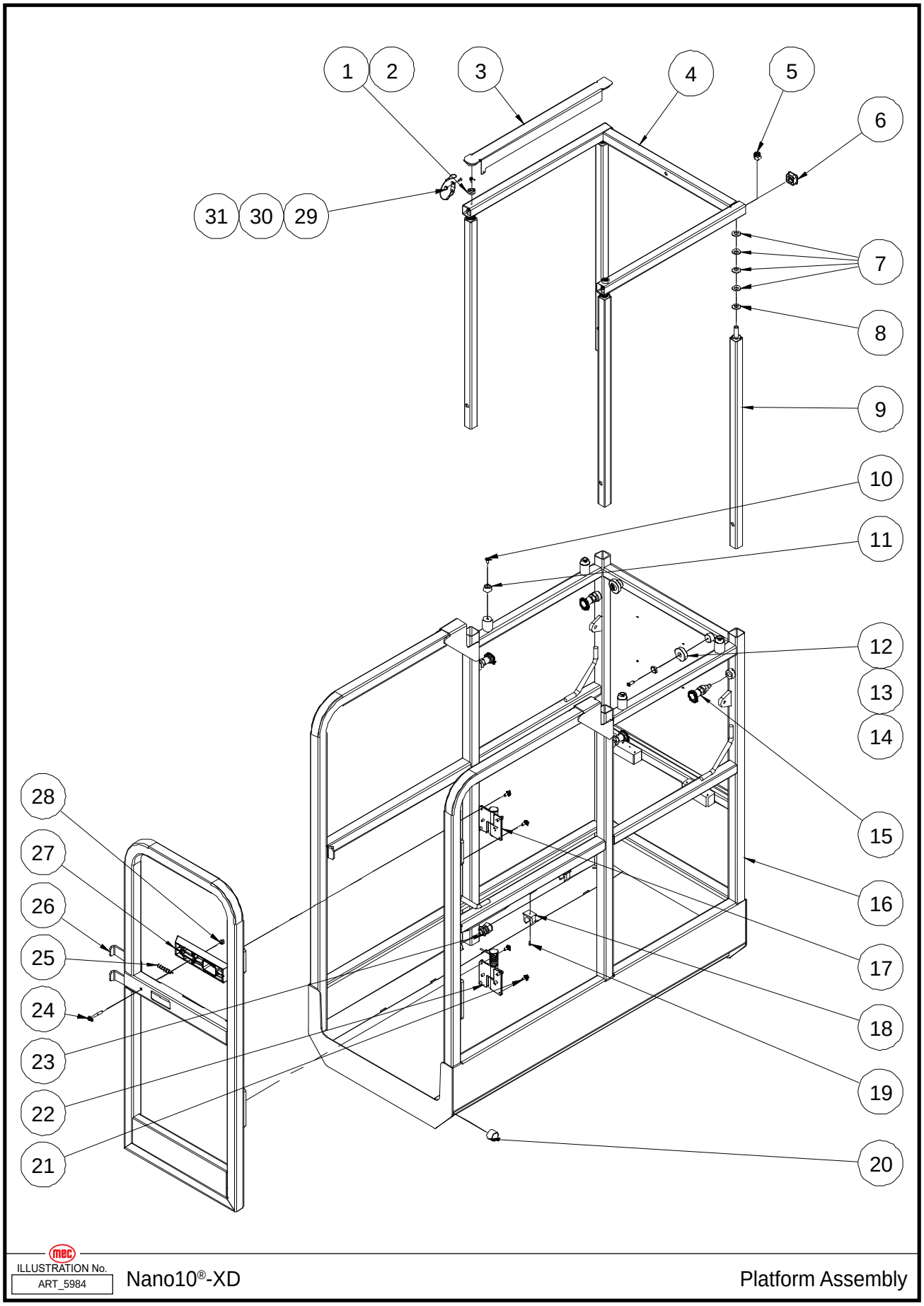

Item	Part Number	Description	Qty.
1	96297	Magnet, 0.906 OD x .23 ID x .787, Counter Sink, 51 Lbs	2
2	53496	Screw CSCS M05-0.80 × 25	2
3	46618	Rear Extension Rail	1
4	46626	Upper Rail	1
5	50050	Nut NNYL M12 × 1.75	4
6	93217	1.50” x 3.00” x 11 Ga. Rectangular Tube Cap	2
7	53307	WSHR Belleville 1.00 OD X 0.5 ID	16
8	50003	WSHR M12 Standard Flat Washer	4
9	46627	Telescopic Rail	4
10	53224	Screw THMS M05-0.80 × 12	4
11	41120	Bumper	4
12	94981	Encased Magnetic Disc With Mounting Hole (120 LB Max Pull)	2
13	95321	Nylon Plastic Countersunk Washer For 1/4 Screw	2
14	50561	Screw CSCS M06-1.00 × 20	2
15	44016	Lock Pin, Pull Type	4
16	46630	Platform Weldment	1
17	41127	Hinge A	1
18	41134	Clip	2
19	53276	Screw PHMS M04-0.70 × 8	2
20	41046	Bearing	2
21	53273	Screw HHCS M06-1.00 × 14 Serrated Flange	12
22	41128	Hinge B	1
23	41273	Water-Proof Joint	1
24	53360	Screw HHCS M06-1.00 × 45 Flange	1
25	41277	Spring	1
26	46628	Entry Gate	1
27	41278	Latch Handle	1
28	50568	Nut NNYL M06-1.00 Flange	1
29	53501	Screw CSCS #08-32X00.38 ZP	1
30	53502	Acorn Nut #08-32	1
31	96313	Lanyard, Cable	1

Step Installation

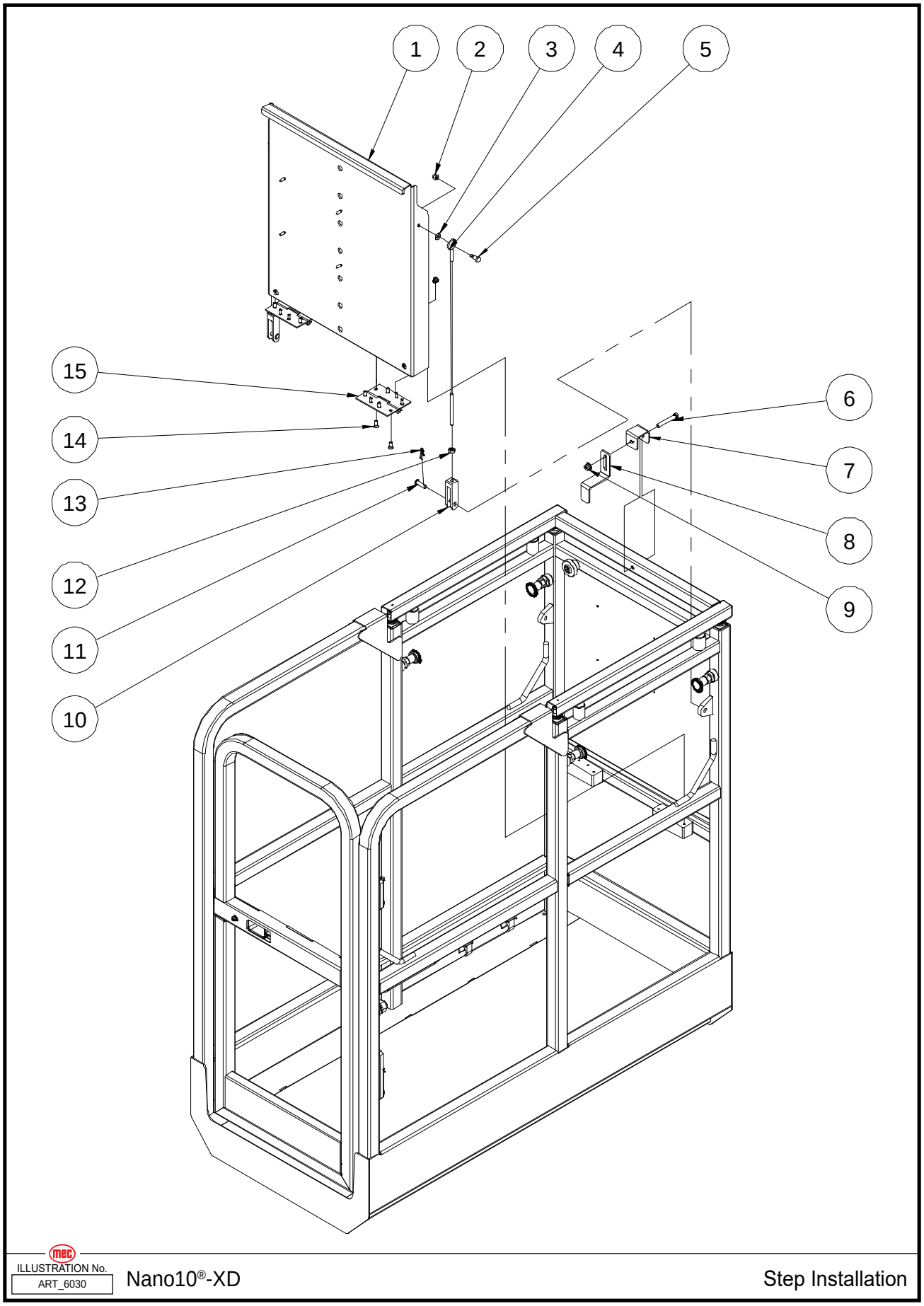

Item	Part Number	Description	Qty.
1	46633	Pallet Weldment	1
2	50568	Nut NNYL M06-1.00 Flange	10
3	50001	WSHR M08 Standard Flat Washer	2
4	46771	Wire Rope	2
5	46772	Pin	2
6	50016	Screw HHCS M08-1.25 × 55	1
7	44224	Step Inhibitor Clamp	1
8	44223	Step Inhibitor	1
9	50313	Nut NNYL M08-1.25 Flange	1
10	95402	Adjustment Joint	2
11	95404	Pin	2
12	53014	Nut NHEX M08-1.25	2
13	46541	Cotter Pin	2
14	53226	Screw CSCS M06-1.00 × 16	16
15	95405	Hinge	2

Platform Control Assembly

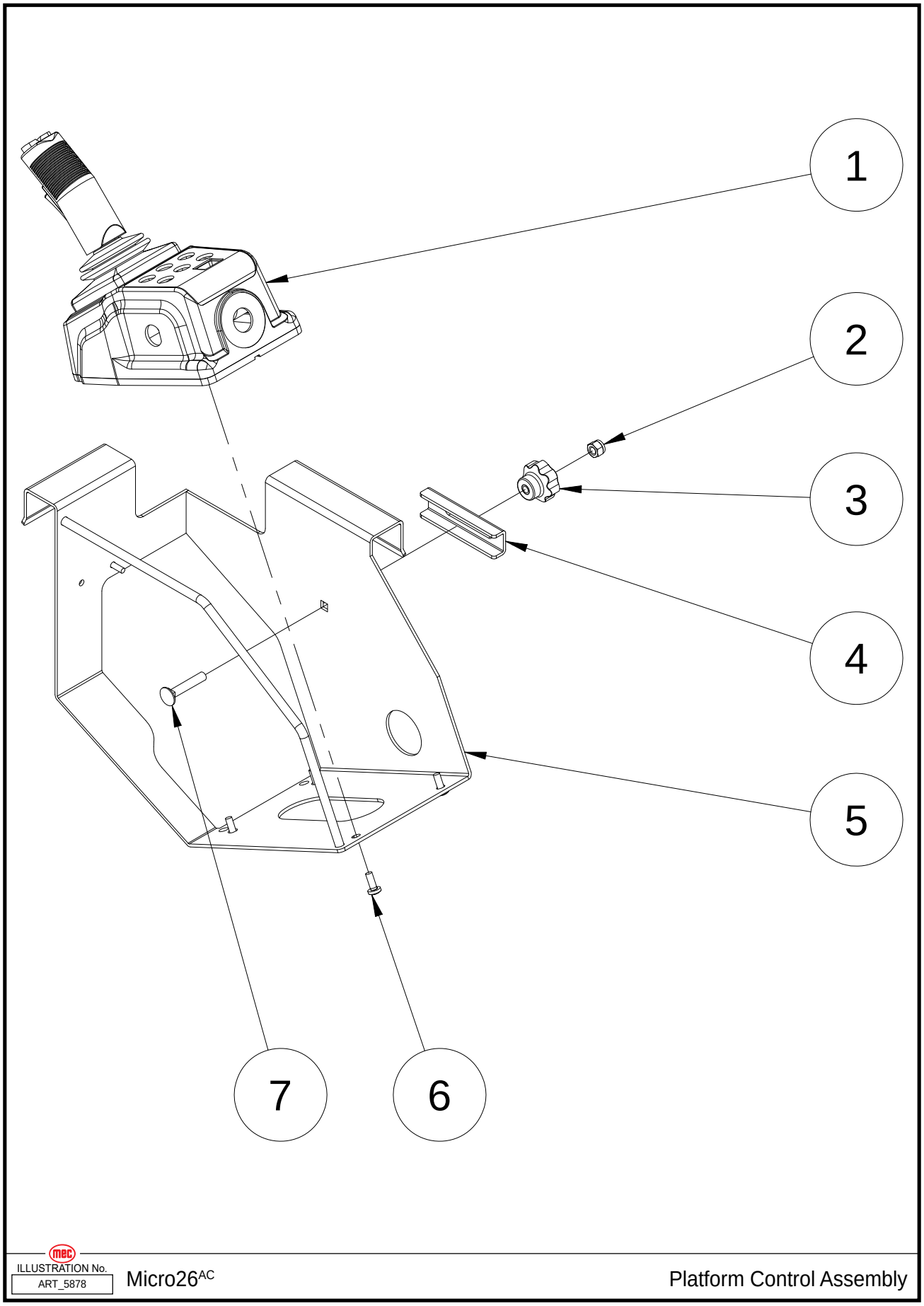

Item	Part Number	Description	Qty.
1	47375	Platform Control Box Assembly (Refer to page 66)	1
2	50048	Nut NNYL M08 × 1.25	1
3	42501	Handle	1
4	42500	Locating Plate	1
5	46629	Platform Control Box Mount Bracket	1
6	53231	Screw PHMS M06-1.00 × 16	4
7	53248	Screw CARB M08-1.25 × 45	1

Platform Control Box Assembly

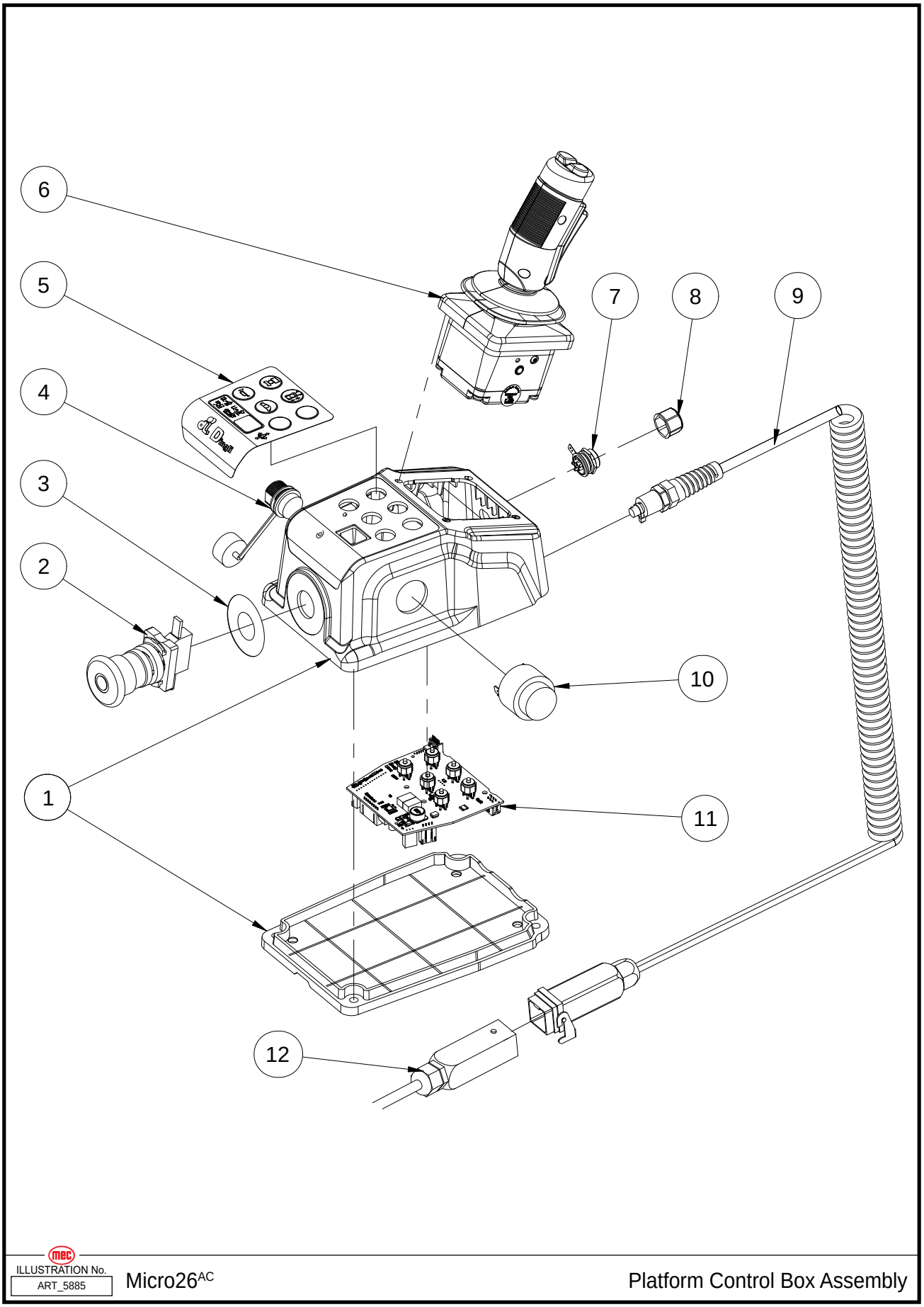

Item	Part Number	Description	Qty.
1	44768	Shell Components	1
2	41157	Emergency Stop Switch	1
--	43632	Red Mushroom Head	1
--	43633	Base With 1 NC Contact	1
3	42915	Decal, Emergency Stop Panel	1
4	44769	USB Cable	1
5	44797	Decal, Platform Control Panel	1
6	41149	Joystick	1
--	43621	Function Enable Switch	1
--	41150	Joystick Cover	1
--	43622	Joystick Steer Switch	1
--	43623	Switch Boot	1
7	44770	Connector	1
8	44771	Connector Cap	1
9	44772	Coil Cord	1
--	44773	Hood	1
--	44774	Female Insert	1
--	44775	Female Contacts	5
--	43627	Cable Gland	1
10	41568	Alarm	1
--	43631	Alarm Nut	1
11	44776	PCU Main Board	1
12	46632	Platform Control Box Harness	1
--	44778	Housing	1
--	44779	Male Insert	1
--	44780	Male Contacts	5
--	43627	Cable Gland	1

Electrical Harness

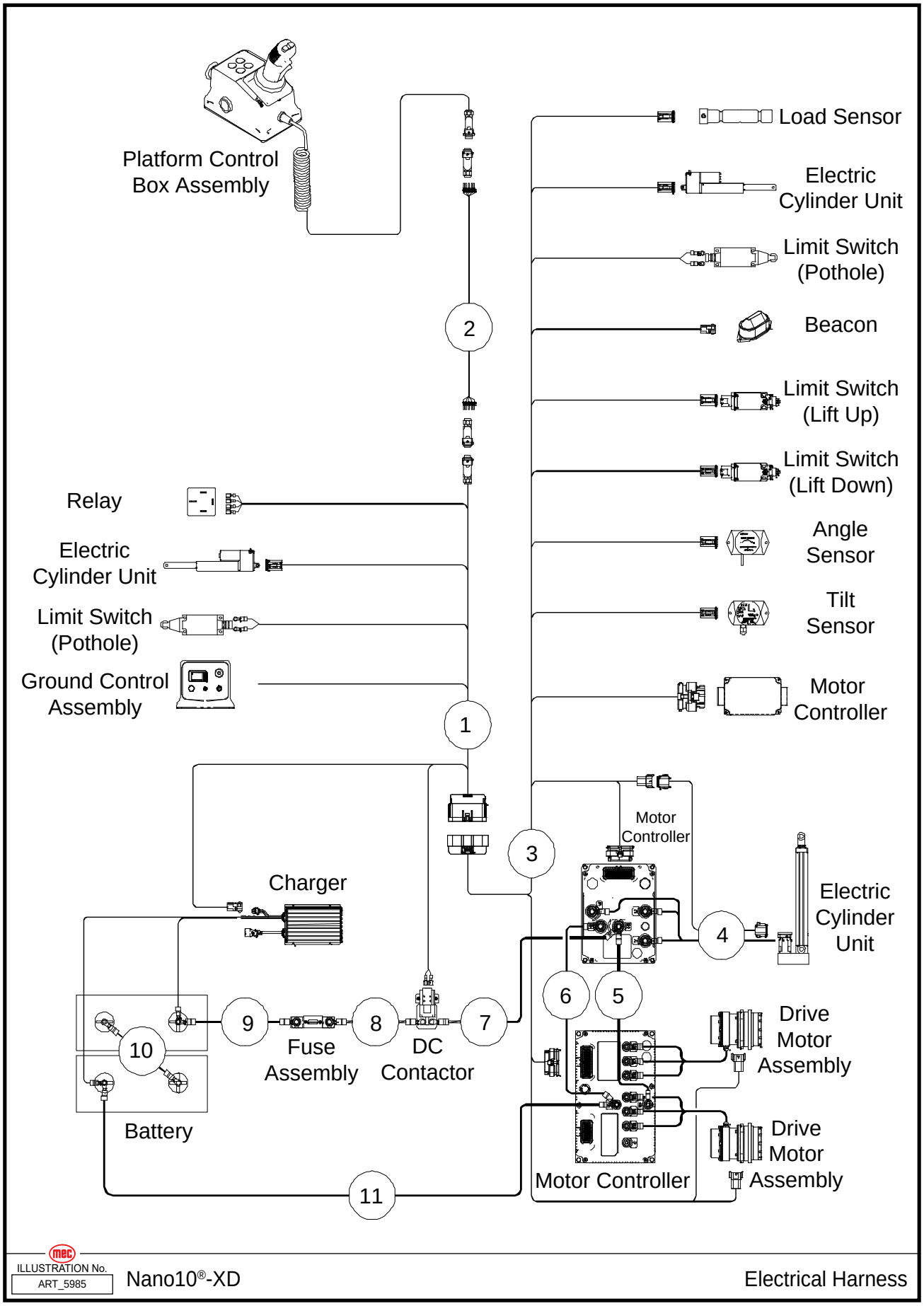

Item	Part Number	Description	Qty.
1	46631	Chassis Harness 1	1
2	46632	Platform Control Box Harness	1
3	46634	Chassis Harness 2	1
4	--	--	--
5	46635	Power Harness	1
6	46636	Power Harness	1
7	46637	Power Harness	1
8	44545	Power Harness	1
9	46638	Power Harness	1
10	46639	Power Harness	1
11	46640	Power Harness	1

Decals

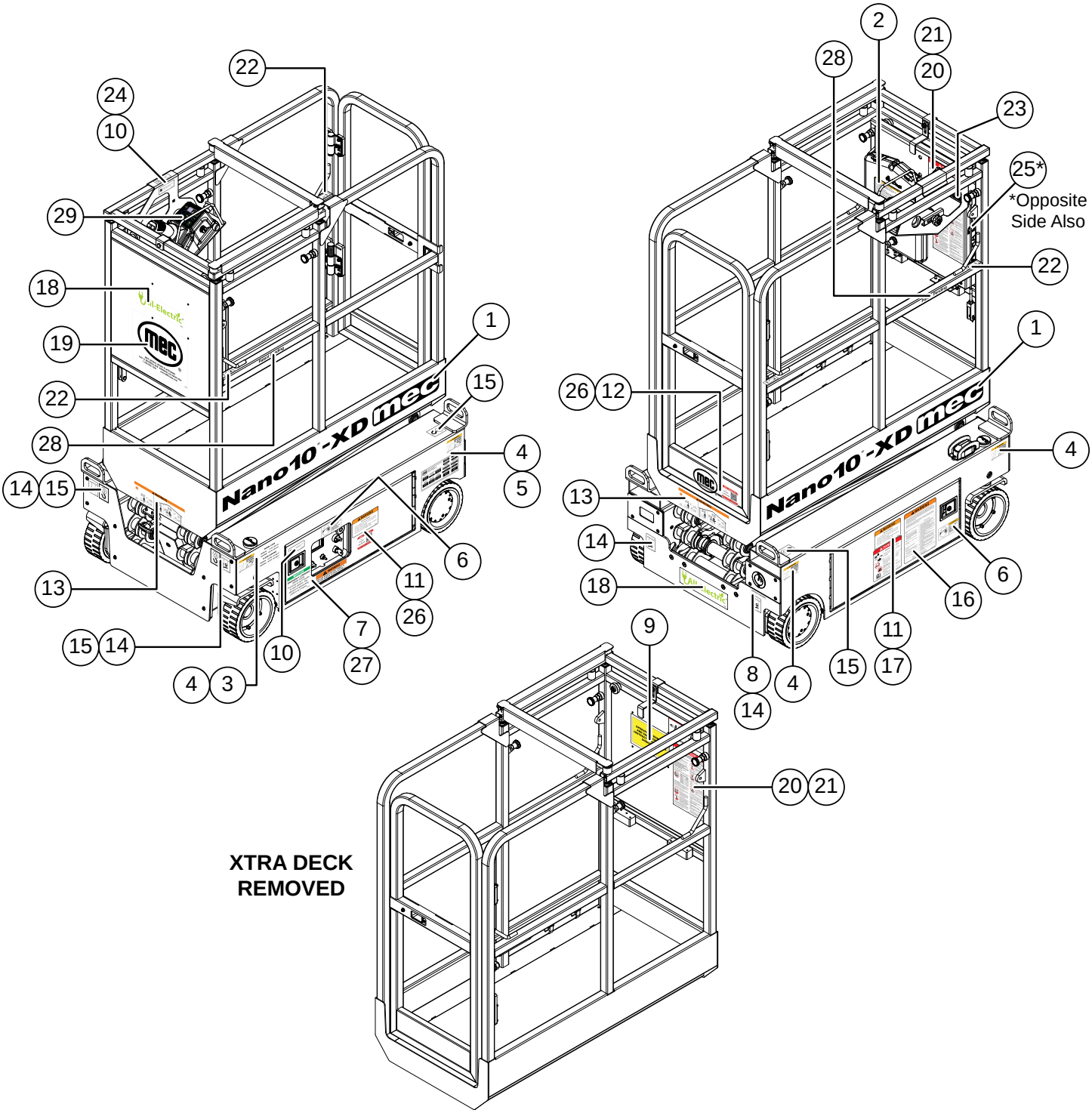

1 Nano10®-XD mec 95919 Qty. - 2	**2** XTRA DECK INSTRUCTIONS • MAXIMUM CAPACITY 250lbs (113Kg) 1 PERSON. • EXTEND TELESCOPIC GUARDRAILS UNTIL THE PINS SNAP INTO HOLES WHEN THE GUARDRAILS REACH THE EXTENDED POSITION. • FOLD DOWN THE XTRA DECK. • LIFT-UP AND ENGAGE THE SWINGING TUBE GUARDRAIL ACROSS THE XTRA DECK GUARDRAIL ENTRANCE. • TO STOW, FIRST FOLD-UP THE XTRA DECK. • PULL THE PLUNGER PINS, THEN LOWER THE GUARDRAILS TO THE STOWED POSITION. 250lbs (113Kg) 1 PERSON 95208 Qty. - 1	**3** WHEEL LOAD MINIMUM 71 PSI / 490 KPa MAXIMUM 100 PSI / 690 KPa FLOOR LOADING MINIMUM 132 PSF / 644 Kg/m² MAXIMUM 185 PSF / 903 Kg/m² 96307 Qty. - 1	**4** WARNING MAXIMUM TIE-DOWN ANGLE 30° 30° 94362 Qty. - 4	**5** mec MEC Aerial Work Platform Sales Corp. 1401 S. Madera Ave Kerman, CA 93630, USA MODEL NUMBER XXXXXX SERIAL NUMBER XXXXXXX MFG DATE XXXX MERIP CLASS A MAX CAPACITY XXX LBS XXX KG ELECTRICAL VOLTAGE XX Volts MACHINE WEIGHT X,XXX LBS X,XXX KG INDOOR MAX PLAT HEIGHT XXX.X ft XXX.X m OUTDOOR MAX PLAT HEIGHT XXX.X ft XXX.X m MAX WIND SPEED XX MPH XX.X m/s MAX LOAD PER WHEEL XXX LBS XXX KG CHASSIS INCLINATION XX.X DEG XX° INLINE PERSONS X MANUAL FORCE XX LBS XXX N PERSONS X MANUAL FORCE XX LBS XXX N 1401 S. MADERA AVE. MADE UNDER CONSTRUCTION IN ACCORDANCE WITH ANSI A92.6 (2006) AND CSA B354.7 (2. MADE IN CHINA 96222 96222 Qty. - 1
6 WARNING DO NOT POWERWASH OR SPRAY ELECTRONIC COMPONENTS OR CONNECTORS. MOISTURE MAY CAUSE DAMAGE AND/OR ERRATIC OPERATION 90732 90732 Qty. - 2	**7** WARNING RELEASE BRAKES BEFORE TOWING TO PREVENT DAMAGE TO DRIVE SYSTEM 42534 42534 Qty. - 1	**8** BATTERY CHARGER 90750 90750 Qty. - 1	**9** OPERATOR'S MANUAL AND SAFE WORKING INSTRUCTIONS LOCATED UNDER STEP 95389 95389 Qty. - 1	**10** Refer the operator to the instructions for use. 9314013 41639 Qty. - 2
11 WARNING Tip-over Hazard Do not use batteries that weigh less than the original equipment. Batteries are used as counterweight and are critical to machine stability. Each battery must weigh **14 lbs / 6.5 kg.** The batteries must weigh a minimum of **28 lbs / 13 kg.** 46532 46532 Qty. - 2	**12** mec® 95301 Qty. - 1	**13** WARNING 569 LBS (227 KG) 20 MPH (32.2 KPH) 45 LBS (20.4 N) 10% Incline 569 LBS (227 KG) 250 LBS (113 KG) 45 LBS (20.4 N) 250 LBS (113 KG) 3 MPH (4.8 KPH) 45 LBS (20.4 N) 46734 Qty. - 2	**14** 9311015 41635 Qty. - 4	**15** 9311013 41634 Qty. - 4
16 WARNING 41649 Qty. - 1	**17** DANGER Explosion/Burn Hazard Ignition of explosive gases or contact corrosive acid will cause death, burns or blindness. Keep all open flames and sparks away. Wear personal protective equipment, including face shield, gloves and long sleeve shirt. Read Manuals Read all manuals prior to operation. DO NOT OPERATE equipment if you do not understand the information in the manuals. Consult your supervisor, the owner or the manufacturer. 41641 Qty. - 1	**18** All-Electric® 95626 95626 Qty. - 2	**19** mec® MEC AERIAL WORK PLATFORMS 1401 S. MADERA AVE. KERMAN, CA 93630 USA 1-559-842-1500 www.MECawp.com 90719 Qty. - 1	**20** DANGER 43885 Qty. - 2
21 DANGER Tip-over Hazard Fall-down sounds, unit is on a severe slope. Death or serious injury could occur. 1. Lower the platform. 2. Move the machine to level surface. 9414123UM 41647 Qty. - 2	**22** Restraint only 1 Occurrence 9414123UM 41648 Qty. - 3	**23** DRIVE FORWARD/ LOWER DRIVE REVERSE/ LIFT UP 94120 94120 Qty. - 1	**24** Platform controller normal position. 9314015 41640 Qty. - 1	**25** XTRA DECK 95188 Qty. - 2
26 MEC - Model Info Text *Nano10XD* to 1 (844) 483-4669 Manuals Brochures Warranty & More 96221 96221 Qty. - 2	**27** NOTICE EMERGENCY LOWERING INSIDE DOOR. Pull firmly on red T-handle to lower platform. Pay attention to approaching platform as it lowers. 46533 46533 Qty. - 1	**28** Patent Pending 94865 94865 Qty. - 2	**29** 44797 Qty. - 1	

MEC Parts Order Form

Phone: 559-842-1523
Fax: 559-400-6723
Email: Parts@mecawp.com

Please Fill Out Completely:

Date: _____ **Ordered By:** _____
Account: _____ **Your Fax No.:** _____
Bill to: _____ **Ship to:** _____
_____ _____
_____ _____

Purchase Order Number _____ **Ship VIA** _____
*** All orders MUST have a Purchase Order Number* ***Fed Ex shipments require Fed Ex account number*

Part Number	Description	Quantity	Price

All back-ordered parts will be shipped when available via the same ship method as original order unless noted below:

_____ Ship complete order only - No Backorders
_____ Ship all available parts and contact customer on disposition of back-ordered parts
_____ Other (Please specify)

Signature _____

Limited Owner Warranty

MEC Aerial Platform Sales Corp. warrants its equipment to the original purchaser against defects in material and/or workmanship under normal use and service for one (1) year from date of registered sale or date the unit left the factory if not registered. MEC Aerial Platform Sales Corp. further warrants the structural weldments of the main frame and scissor arms to be free from defects in material or workmanship for five (5) years from date of registered sale or date unit left the factory if not registered. Excluded from such warranty is the battery(s) which carries a ninety (90) day warranty from described purchase date. Warranty claims within such warranty period shall be limited to repair or replacement, MEC Aerial Platform Sales Corp's option, of the defective part in question and labor to perform the necessary repair or replacement based on MEC Aerial Platform Sales Corp's then current flat rate, provided the defective part in question is shipped prepaid to MEC Aerial Platform Sales Corp. and is found upon inspection by MEC Aerial Platform Sales Corp. to be defective in material and/or workmanship. MEC Aerial Platform Sales Corp. shall not be liable for any consequential, incidental or contingent damages whatsoever. Use of other than factory authorized parts; misuse, improper maintenance, or modification of the equipment voids this warranty. The foregoing warranty is exclusive and in lieu of all other warranties, express or implied. All such other warranties, including implied warranties of merchantability and of fitness for a particular purpose, are hereby excluded. No Dealer, Sales Representative, or other person purporting to act on behalf of MEC Aerial Platform Sales Corp. is authorized to alter the terms of this warranty, or in any manner assume on behalf of MEC Aerial Platform Sales Corp. any liability or obligation which exceeds MEC Aerial Platform Sales Corp's obligations under this warranty.

MEC Aerial Work Platforms

1401 S. Madera Avenue, Kerman, CA 93630 USA
Toll Free: 1-877-632-5438
Phone: 1-559-842-1500
Fax: 1-559-842-1520
info@MECawp.com
www.MECawp.com