Service & Parts Manual

Mast Series

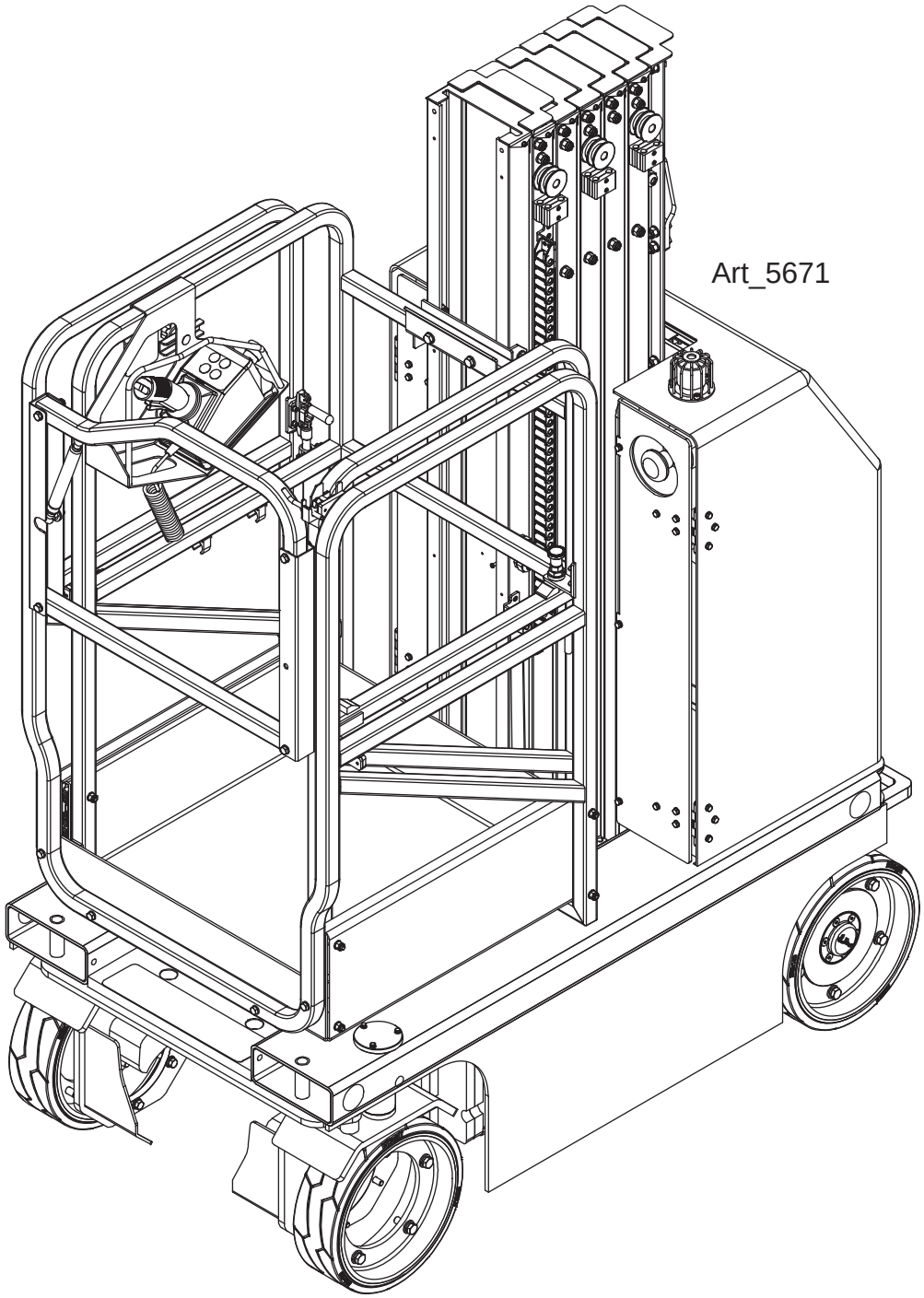

MME20 Serial Number Range 17200000 - Up
MME25 Serial Number Range 17300000 - Up

Part # 95568
November 2023

Revision History

Date	Reason for Update
May 2021	New Release

MEC Aerial Work Platforms

1401 S. Madera Avenue, Kerman, CA 93630 USA
Toll Free: 1 - 877 - 632 - 5438
Phone: 1 - 559 - 842 - 1500
Fax: 1 - 559 - 842 - 1520
info@MECawp.com
www.MECawp.com

Table of Contents

Chapter 1 - Service 1

Service Introduction 1

Section 1 - MEC Operator Policy 2
MEC Operator Policy 2

Section 2 - Safety Symbols & General Safety Tips 3
Safety Symbols & General Safety Tips 3

Section 3 - Specifications 4
Specifications 4

Section 4 - Torque Specifications 5
Bolt Torque Specification - American Standard 5
Bolt Torque Specification - Metric Standard 6
Hydraulic Components Torque Table 7

Section 5 - Maintenance Safety. 8
Maintenance Safety 8

Section 6 - Hydraulic, Electrical and Total System 9
Hydraulic, Electrical and Total System 9

Section 7 - Machine Components 10
Machine Components 10

Section 8 - Emergency Systems and Procedures. 11
Emergency Systems and Procedures 11

Section 9 - Transport and Lifting Instructions. 12
Brake Release Instructions 12
Transport and Lifting Instructions 13
Crane Lifting Instructions 14

Section 10 - Maintenance 15
General Machine Maintenance 15
Pre-start Inspection Report 16
Hydraulic Reservoir 17
Maintenance Inspection Report 18
Maintenance 19
Pre-delivery Preparation Report 20
Daily Inspections 21
Quarterly Inspections 23
Semi-annually Inspections. 34
Yearly Inspections 36

Section 11 - Control System 38
Control Component Locations. 38

Fault Codes 39
Error Indicator Readout 40

Section 12 - Schematics **43**
Electrical Schematic 43
Hydraulic Schematic 44

Section 13 - Calibrations **45**
Calibration Instructions 45

Section 14 - Parameter Adjustments **47**
Parameter Adjustment 47

Chapter 2 - Parts 52

Parts Introduction **52**

Section 15 - Chassis. **53**
Cover Installation 53
Steer Linkage and Wheels Assembly 55
Rear Wheel Assembly 57
Pothole Protection Assembly 59
Electrical Component Installation 61
Ground Control Box Assembly 63
Motor Controller Assembly 65
Hydraulic Component Installation 67
Hydraulic Tank Assembly 69

Section 16 - Mast **71**
Mast and Chassis Installation 71
Mast Assembly (MME20) 73
Mast Assembly (MME25) 75
Lifting Chain Assembly (MME20) 79
Lifting Chain Assembly (MME25) 81
Pulley Assembly, 5-7 Mast (MME20) 83
Pulley Assembly, 2-4 Mast. 85
Pulley Assembly, 1-3 Mast. 87
Pulley Assembly, 4-6 Mast (MME25) 89
Pulley Assembly, 3-5 Mast. 91
Sequencing Cable Assembly (MME2) 93
Sequencing Cable Assembly (MME25) 95

Section 17 - Platform **97**
Platform and Mast Installation 97
Platform Assembly. 99
Ceiling Grid Platform 101
Platform Control Box Assembly 103

Section 18 - Hydraulic System **105**
Lift Cylinder Assembly 105
Function Manifold Assembly 107

Hydraulic Hoses and Fittings 109

Section 19 - Electrical System **111**
Electrical Harness 111

Section 20 - Options **113**
Leak Containment System, MME20 113
Leak Containment System, MME25 115
Hardware Tool Tray 117
Material Tool Tray 119

Section 21 - Decals **121**
Decal Locations 121

Service Introduction

This Service section is designed to provide you, the customer, with the instructions needed to properly maintain the MEC self-propelled aerial work platform. When used in conjunction with the illustrated Parts section in this manual and the Operator's Manual (provided separately), this manual will assist you in making necessary adjustments and repairs, and identifying and ordering the correct replacement parts.

All parts represented here are manufactured and supplied in accordance with MEC quality standards. We recommend that you use genuine MEC parts to ensure proper operation and reliable performance.

To obtain maximum benefits from your MEC Aerial Work Platforms, always follow the proper operating and maintenance procedures. Only trained authorized personnel should be allowed to operate or service this machine. Service personnel should read and study the Operator's, and the Service and Parts Manuals in order to gain a thorough understanding of the unit prior to making any repairs.

MEC Operator Policy

Note: *The best method to protect yourself and others from injury or death is to use common sense. If you are unsure of any operation,* ***don't start*** *until you are satisfied that it is safe to proceed and have discussed the situation with your supervisor.*

Service personnel and machine operators must understand and comply with all warnings and instructional decals on the body of the machine, at the ground controls, and platform control console.

DANGER

MODIFICATIONS OF THIS MACHINE FROM THE ORIGINAL DESIGN AND SPECIFICATIONS WITHOUT WRITTEN PERMISSION FROM MEC ARE STRICTLY FORBIDDEN. A MODIFICATION MAY COMPROMISE THE SAFETY OF THE MACHINE, SUBJECTING OPERATOR(S) TO SERIOUS INJURY OR DEATH.

MEC's policies and procedures demonstrate our commitment to Quality and our relentless ongoing efforts towards Continuous Improvement, due to which product specifications are subject to change without notice.

Any procedures not found within this manual must be evaluated by the individual to assure oneself that they are "proper and safe."

Your MEC Aerial Work Platform has been designed, built, and tested to provide many years of safe, dependable service. Only trained, authorized personnel should be allowed to operate or service the machine.

MEC, as manufacturer, has no direct control over machine application and operation. Proper safety practices are the responsibility of the user and all operating personnel.

If there is a question on application and/or operation, contact MEC Aerial Work Platforms:

MEC Aerial Work Platforms

1401 S. Madera Avenue, Kerman, CA 93630 USA
Toll Free: 1 - 877 - 632 - 5438
Phone: 1 - 559 - 842 - 1500
Fax: 1 - 559 - 842 - 1520
info@MECawp.com
www.MECawp.com

Safety Symbols & General Safety Tips

MEC manuals and decals use symbols, colors and signal words to help you recognize important safety, operation and maintenance information.

DANGER	**RED and the word DANGER – Indicates an imminently hazardous situation which, if not avoided, will result in death or serious injury.**
WARNING	**ORANGE and the word WARNING – Indicates a potentially hazardous situation which, if not avoided, could result in death or serious injury.**
CAUTION	**YELLOW with alert symbol and the word CAUTION – Indicates a potentially hazardous situation which, if not avoided, may result in minor or moderate injury.**
CAUTION	**YELLOW without alert symbol and the word CAUTION – Indicates a potentially hazardous situation which, if not avoided, may result in property damage.**
NOTICE	**GREEN and the word NOTICE – Indicates operation or maintenance information.**

Regular inspection and constant maintenance is the key to efficient economical operation of your aerial work platform. It will help to assure that your equipment will perform satisfactorily with a minimum of service and repair.

The actual operating environment of the machine governs the inspection schedule. Correct lubrication is an essential part of the preventative maintenance to minimize wear on working parts and ensure against premature failure. By maintaining correct lubrication, the possibility of mechanical failure and resulting downtime is reduced to a minimum.

- Never leave hydraulic components or hoses open. They must be protected from contamination (including rain) at all times.
- Never open a hydraulic system when there are contaminants in the air.
- Always clean the surrounding area before opening hydraulic systems.
- Use only recommended lubricants. Improper lubricants or incompatible lubricants may be as harmful as no lubrication.
- Watch for makeshift “fixes” which can jeopardize safety as well as lead to more costly repair.

Specifications

		MME20		MME25	
Height, Working Maximum*	Indoor	26 ft	8.0 m	31 ft	9.5 m
	Outdoor	22 ft	6.8 m	26 ft	8.0 m
Height, Platform Maximum	Indoor	20 ft	6.0 m	25 ft	7.5 m
	Outdoor	16 ft	4.8 m	20 ft	6.0 m
Height - Stowed		78.35 in	1.99 m	78.35 in	1.99 m
Width		30 in	0.76 m	31.50 in	0.80 m
Length		54.7 in	1.39 m	56.7 in	1.44 m
Platform Dimensions - Retracted Platform Length × Width		29.5×28.5 in	0.75×0.72 m	29.5×28.5 in	0.75×0.72 m
Platform Dimensions - Extended Platform Length × Width		50.5×28.5 in	1.28×0.72 m	50.5×28.5 in	1.28×0.72 m
Maximum Load Capacity		350 lbs	159 kg	350 lbs	159 kg
Rated Persons	Indoor	1		1	
	Outdoor	1		1	
Maximum Wind Speed	Indoor	0 mph	0 m/s	0 mph	0 m/s
	Outdoor	28 mph	12.5 m/s	28 mph	12.5 m/s
Wheelbase		44 in	1.12 m	44 in	1.12 m
Turning Radius	Outside	61 in	1.55 m	62.2 in	1.58 m
	Inside	0 in	0 m	0 in	0 m
Ground Clearance		2.36 in	6 cm	2.36 in	6 cm
Ground clearance Pothole guards deployed		0.55 in	1.4 cm	0.55 in	1.4 cm
Weight **		2,740 lbs	1,243 kg	3,310 lbs	1,501 kg
Power Source		2×12V 115Ah		2×12V 115Ah	
Controls		Proportional		Proportional	
AC Outlet In Platform		Standard		Standard	
Maximum Hydraulic Pressure (Functions)		2,610 psi	180 bar	2,610 psi	180 bar
System Voltage		24V		24V	
Driving Wheels		12.7×3.9 in	323×100 mm	12.7×3.9 in	323×100 mm
Airborne Noise Emissions		<70 dB; Maximum sound level at normal operating workstations (A-weighted)			
Vibration Value Does Not Exceed		2.5 m/s^2		2.5 m/s^2	
Maximum Slope Rating Stowed Position - Fore/Aft		25%		25%	
Maximum Side Slope Rating Stowed position		10%		10%	
		Note: Slope rating is subject to ground conditions and adequate traction.			
Maximum Working Slope		1.5° side-to-side, 3.0° in-line			
Drive speeds					
Stowed, Maximum		2.5 mph	4.0 km/h	2.5 mph	4.0 km/h
Platform Raised, Maximum		0.7 mph	1.1 km/h	0.7 mph	1.1 km/h
Floor Loading Information					
Tire Load, Maximum		937 lbs	425 kg	1,102 lbs	500 kg
Tire Contact Pressure - Max Load		115 psi / 8.1 kg/cm^2	793.8 k Pa	149 psi / 10.5 kg/cm^2	1,028.0 kPa
Occupied Floor Pressure		235 psf / 1,150 kg/m^2	11.27 kPa	267 psf / 1,304 kg/m^2	12.8 kPa

Meets requirements of ANSI A92.20-2020 and CSA B354.6-2019.
Floor loading information is approximate and does not incorporate different option configurations.
It should be used only with adequate safety factors.
*Working Height adds 6 feet (2 m) to platform height.
**Weight may increase with certain options.

Bolt Torque Specification - American Standard

Fasteners

Use the following values to apply torque unless a specific torque value is called out for the part being used.

American Standard Cap Screws								
SAE Grade	**5**				**8**			
Cap Screw Size (inches)								
	Torque				**Torque**			
	Ft.	**Lbs**	**Nm**		**Ft.**	**Lbs**	**Nm**	
	Min	**Max**	**Min**	**Max**	**Min**	**Max**	**Min**	**Max**
1/4 - 20	6.25	7.25	8.5	10	8.25	9.5	11	13
1/4 - 28	8	9	11	12	10.5	12	14	16
5/16 - 18	14	15	19	20	18.5	20	25	27
5/16 - 24	17.5	19	12	26	23	25	31	34
3/8 - 16	26	28	35	38	35	37	47.5	50
3/8 - 24	31	34	42	46	41	45	55.5	61
7/16- 14	41	45	55.5	61	55	60	74.5	81
7/16 - 20	51	55	69	74.5	68	75	92	102
1/2 - 13	65	72	88	97.5	86	96	116	130
1/2 - 20	76	84	103	114	102	112	138	152
9/16 - 12	95	105	129	142	127	140	172	190
9/16 - 18	111	123	150	167	148	164	200	222
5/8 - 11	126	139	171	188	168	185	228	251
5/8 - 18	152	168	206	228	203	224	275	304
3/4 - 10	238	262	322	255	318	350	431	474
3/4 - 16	274	302	371	409	365	402	495	544
7/8 - 9	350	386	474	523	466	515	631	698
7/8 - 14	407	448	551	607	543	597	736	809
1- 8	537	592	728	802	716	790	970	1070
1 - 14	670	740	908	1003	894	987	1211	1137

Torque values apply to fasteners as received from the supplier, dry or when lubricated with normal engine oil.

If special graphite grease, molydisulphide grease, or other extreme pressure lubricants are used, these torque values do not apply.

Bolt Torque Specification - Metric Standard

Fasteners

Use the following values to apply torque unless a specific torque value is called out for the part being used

Metric Cap Screws								
Metric Grade	**8.8**				**10.9**			
Cap Screw Size (Millimeters)	8.8				10.9			
	Torque				**Torque**			
	Ft.	**Lbs**	**Nm**		**Ft.**	**Lbs**	**Nm**	
	Min	**Max**	**Min**	**Max**	**Min**	**Max**	**Min**	**Max**
M6 × 1.00	6	8	8	11	9	11	12	15
M8 × 1.25	16	20	21.5	27	23	27	31	36.5
M10 × 1.50	29	35	39	47	42	52	57	70
M12 × 1.75	52	62	70	84	75	91	102	123
M14 × 2.00	85	103	115	139	120	146	163	198
M16 × 2.50	130	158	176	214	176	216	238	293
M18 × 2.50	172	210	233	284	240	294	325	398
M20 × 2.50	247	301	335	408	343	426	465	577
M22 × 2.50	332	404	450	547	472	576	639	780
M24 × 3.00	423	517	573	700	599	732	812	992
M27 × 3.00	637	779	863	1055	898	1098	1217	1488
M30 × 3.00	872	1066	1181	1444	1224	1496	1658	2027

Torque values apply to fasteners as received from the supplier, dry or when lubricated with normal engine oil.

If special graphite grease, molydisulphide grease, or other extreme pressure lubricants are used, these torque values do not apply.

Hydraulic Components Torque Table

Note: Always lubricate threads with clean hydraulic fluid prior to installation.

Use the following values to torque hydraulic components when a specific value is not available. Always check for torque values in the following places before relying on the Hydraulic Components Torque Table.

- Parts drawings and service instructions in this manual.
- Packaging and instruction sheets provided with new parts.
- Instruction manuals provided by the manufacturer of the component being serviced.

Type: SAE Port Series	Cartridge Poppet		Fittings		Hoses	
	Ft. lbs	Nm	Ft. lbs	Nm	In. lbs	Nm
#4	N/A	N/A	N/A	N/A	135 - 145	15 - 16
#6	N/A	N/A	10 - 20	14 - 27	215 - 245	24 - 28
#8	25 - 30	31 - 41	25 - 30	34 - 41	430 - 470	49 - 53
#10	35 - 40	47 - 54	35 - 40	47 - 54	680 - 750	77 - 85
#12	85 - 90	115 - 122	85 - 90	115 - 122	950 - 1050	107 - 119
#16	130 - 140	176 - 190	130 - 140	176 - 190	1300 - 1368	147 - 155

Maintenance Safety

WARNING **Make sure the chock is in place during maintenance!**

WARNING **When the work platform of a Mast Series needs to be raised for routine servicing purposes, a captive chock shall be used to enable the extending structure to be held in the required position to prevent the work platform from falling!**

NEVER perform work or inspection on the machine with the platform elevated without first supporting the platform with either a forklift or a crane. Alternatively, use a 2”×4” or recommended a 4”×4” piece of wood to support the mast section that is attached to the platform.

Hydraulic, Electrical and Total System

Hydraulic System

WARNING

HYDRAULIC FLUID UNDER PRESSURE CAN PENETRATE AND BURN SKIN, DAMAGE EYES, AND MAY CAUSE SERIOUS INJURY, BLINDNESS, AND EVEN DEATH.

CORRECT LEAKS IMMEDIATELY.

CAUTION

Hydraulic fluid leaks under pressure may not always be visible. Check for pin hole leaks with a piece of cardboard, not your hand.

Electrical System

CAUTION

Prevent damage to battery and/or electrical system;

- **Always disconnect the negative battery cable first.**
- **Always connect the positive battery cable last.**

When the negative cable is installed, a spark will occur if contact is made between the positive side of the battery and a metal surface on the machine. This can cause damage to the electrical system, battery explosion, and personal injury.

Total System

WARNING

FAILURE TO PERFORM PREVENTIVE MAINTENANCE AT RECOMMENDED INTERVALS MAY RESULT IN THE UNIT BEING OPERATED WITH A DEFECT THAT COULD RESULT IN INJURY OR DEATH OF THE OPERATOR.

IMMEDIATELY REPORT TO YOUR SUPERVISOR ANY DEFECT OR MALFUNCTION. ANY DEFECT SHALL BE REPAIRED PRIOR TO CONTINUED USE OF THE AERIAL WORK PLATFORM.

INSPECTION AND MAINTENANCE SHOULD BE PERFORMED BY QUALIFIED PERSONNEL FAMILIAR WITH THE EQUIPMENT.

Machine Components

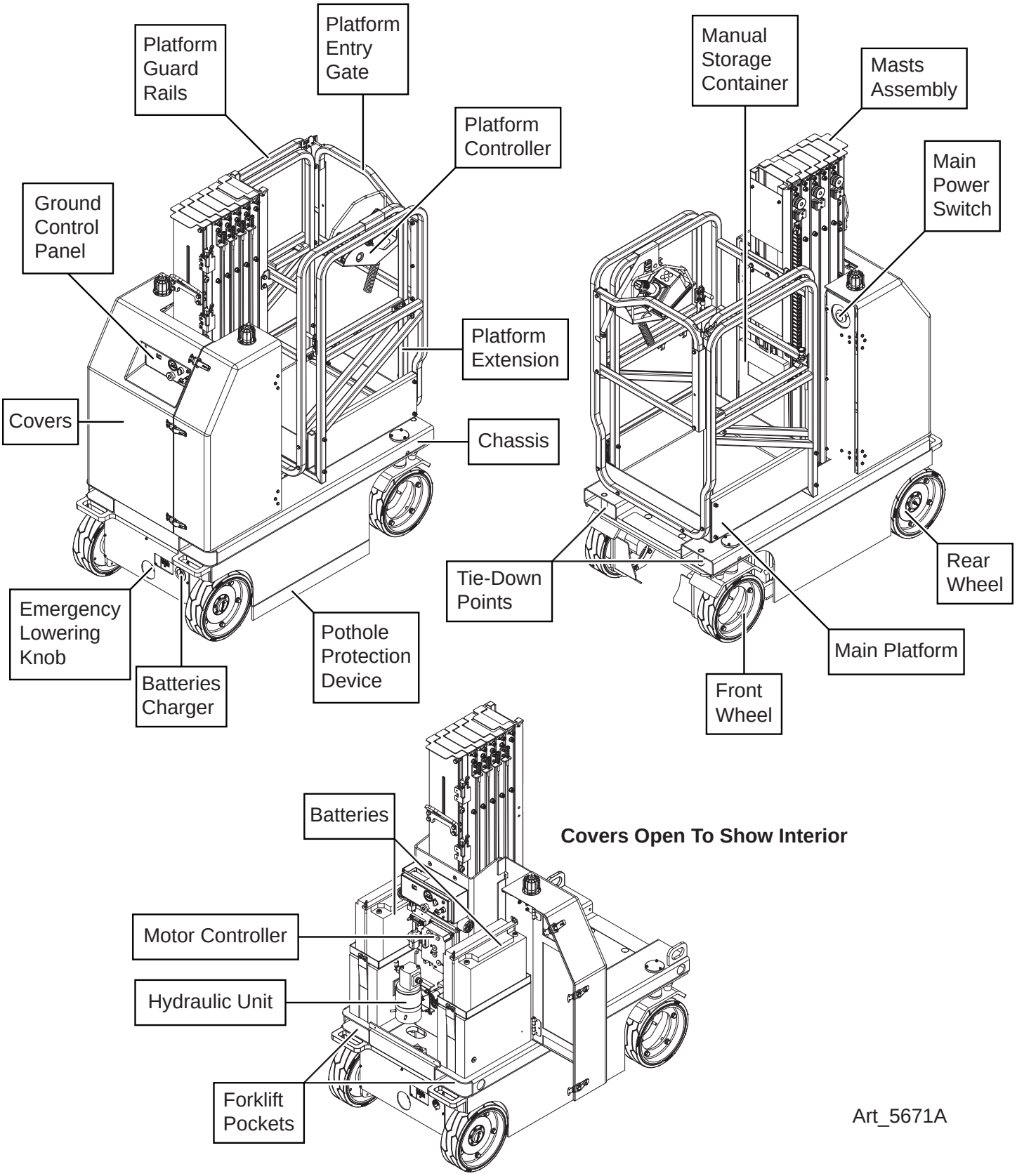

Covers Open To Show Interior

Emergency Systems and Procedures

WARNING

IF THE CONTROL SYSTEM FAILS WHILE THE PLATFORM IS ELEVATED, HAVE AN EXPERIENCED OPERATOR USE THE EMERGENCY LOWERING PROCEDURE TO SAFELY LOWER THE PLATFORM.

DO NOT ATTEMPT TO CLIMB DOWN ELEVATING ASSEMBLY.

Emergency Stop

ART_3353

The machine is equipped with an EMERGENCY STOP switch at the base controls and the platform control box.

- Press the EMERGENCY STOP switch at any time to stop all machine functions.
- Pull switch to reset.
- Either switch will stop all machine functions.
- Both switches must be reset or machine will not operate.

Emergency Lowering

To lower the platform, pull the Emergency Lowering Knob, located near the bottom of the front of the machine where the Base Control panel is located. The Emergency Lowering Knob location has a yellow decal border.

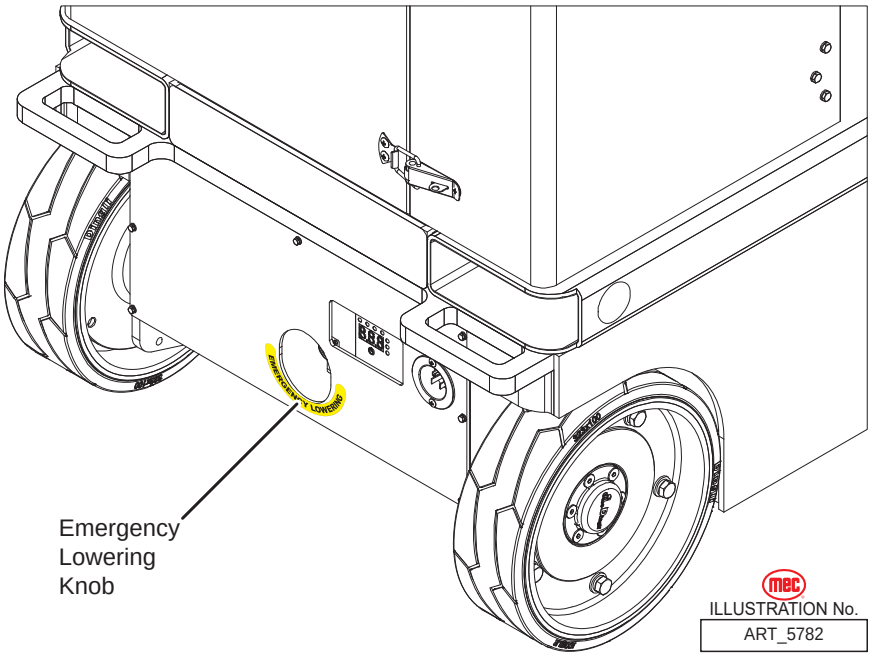

Brake Release Instructions

Observe and Obey:

- Common sense and planning must be applied to control the movement of the machine when lifting it with a crane or forklift.
- Only qualified aerial lift operators should move the machine on or off the truck.
- The transport vehicle must be parked on a level surface.
- The transport vehicle must be secured to prevent rolling while the machine is being loaded.
- Be sure the vehicle capacity, loading surfaces and chains or straps are sufficient to withstand the machine weight. See the serial label for the machine weight.
- The machine must be on a level surface or secured before releasing the brakes.
- Only qualified forklift operators should lift the machine with a forklift.
- Be sure the crane capacity, loading surfaces and straps or lines are sufficient to withstand the machine weight. See the serial plate for the machine weight.

Brake Release Operation

1. Chock the wheels to prevent the machine from rolling.
2. Pull out the red Emergency Stop button on both the ground and platform controls to the ON position.
3. Press and hold lift switch to “DOWN” position in ground control, meanwhile turn on the key switch to the Ground position. The brake will be released after Alarm alerts.
4. If you want to apply the brakes, just turn off the key switch or push the Emergency stop buttons.
5. Push the red Emergency stop button on both the ground and platform controls to the OFF position.

When the machine is towed, do not exceed 2.5 mph / 4.0 km/h.

Transport and Lifting Instructions

Securing to Truck or Trailer for Transit

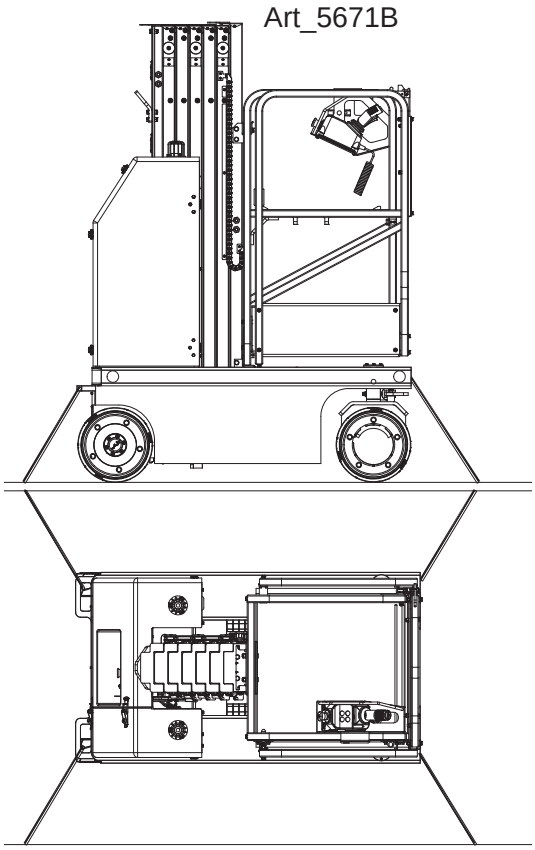

Always chock the machine wheels in preparation for transport.

Retract and secure the extension deck.

Turn the key switch to the OFF position and remove the key before transporting.

Inspect the entire machine for loose or unsecured items.

Use the tie-down points on the chassis for anchoring down to the transport surface.

Use a minimum of four chains or straps. Use chains or straps of ample load capacity.

Do not overtighen chain binders.

Lifting the Machine with a Forklift

Be sure the extension deck, controls and component trays are secure. Remove all loose items on the machine.

Fully lower the platform. The platform must remain lowered during all loading and transport procedures.

Use the forklift pockets located at the rear of the machine.

Position the forklift forks in position with the forklift pockets.

Drive forward to the full extent of the forks.

Raise the machine 6 in / 15 cm and then tilt the forks back slightly to keep the machine secure.

Be sure the machine is level when lowering the forks.

NOTICE **Lifting the machine from the side can result in component damage.**

Crane Lifting Instructions

Only qualified riggers should rig and lift the machine.

WARNING

Ensure that the crane, loading surfaces, cables, chains and straps are of sufficient capacity to withstand the machine weight. See the serial plate for the machine weight.

Fully lower the platform. Be sure the extension deck, control box and component trays are secure. Remove all loose items on the machine.

Make sure the platform and chassis E-stops are depressed.

Use the lifting eye mounted on the rear mast column.

Make sure the mast is fully lowered.

Inspect the entire machine and remove any loose or unsecured items.

Adjust the rigging to prevent damage to the machine.

Lift the machine slowly to prevent rocking.

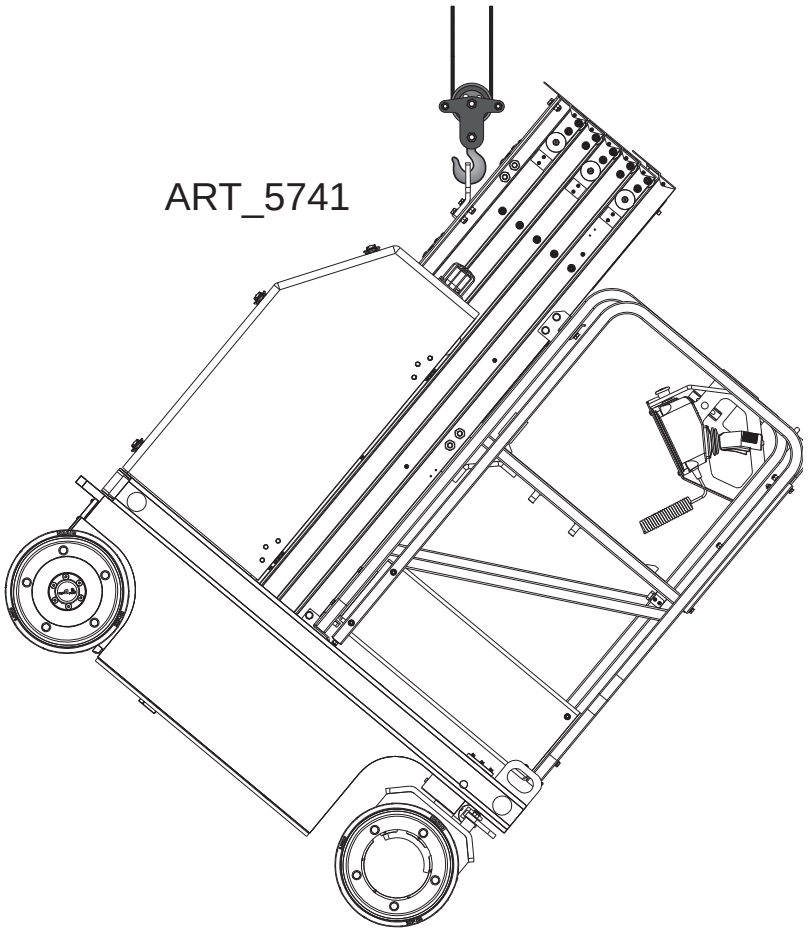

General Machine Maintenance

Instructions in this portion of the manual are to be used in conjunction with the Pre-Start, Frequent and Annual Inspection checklists found in this machine's Operator's Manual.

IMPORTANT: Scheduled maintenance inspection checklists are included in the Operator's Manual for use only by qualified service technicians. Only qualified service technicians may perform repairs to the machine. After repairs are completed, the operator must perform a Pre-Start Inspection before proceeding to the Functions Test.

DANGER

HYDRAULIC FLUID UNDER PRESSURE CAN PENETRATE AND BURN SKIN, DAMAGE EYES, AND MAY CAUSE SERIOUS INJURY, BLINDNESS, AND DEATH. REPAIR LEAKS IMMEDIATELY. FLUID LEAKS UNDER PRESSURE MAY NOT ALWAYS BE VISIBLE. CHECK FOR PIN HOLE LEAKS WITH A PIECE OF CARDBOARD, NOT YOUR HAND.

WARNING

NEVER PERFORM WORK OR INSPECTION ON THE MACHINE WITH THE PLATFORM ELEVATED WITHOUT FIRST BLOCKING THE SCISSOR ASSEMBLY WITH THE MAINTENANCE LOCK (SEE THE INTRODUCTION PORTION OF THIS MANUAL).

PERFORM SCHEDULED MAINTENANCE AT RECOMMENDED INTERVALS. FAILURE TO PERFORM SCHEDULED MAINTENANCE AT RECOMMENDED INTERVALS MAY RESULT IN A DEFECTIVE OR MALFUNCTIONING MACHINE AND MAY RESULT IN INJURY OR DEATH OF THE OPERATOR. KEEP MAINTENANCE RECORDS CURRENT AND ACCURATE.

IMMEDIATELY REPORT ANY DAMAGE, DEFECT, UNAUTHORIZED MODIFICATION OR MALFUNCTION TO YOUR SUPERVISOR. ANY DEFECT MUST BE REPAIRED PRIOR TO CONTINUED USE. DO NOT USE A DAMAGED, MODIFIED OR MALFUNCTIONING MACHINE.

CAUTION

Never leave hydraulic components or hoses open. Plug all hoses and fitting immediately after disassembly to protect the system from outside contamination (including rain).

Never open a hydraulic system when there are contaminants in the air.

Always clean the surrounding area before opening hydraulic systems.

Use only recommended lubricants. Improper lubricants or incompatible lubricants may cause as much damage as no lubrication.

Watch for makeshift "fixes" which can jeopardize safety as well as lead to more costly repair.

Inspection and maintenance should be performed by qualified personnel familiar with the equipment.

Pre-start Inspection Report

	Be sure that the operator's manual are complete, legible and in the storage container located in the platform.
	Be sure that all decals are legible and in place. See Decals section.
	Check for hydraulic oil leaks and proper oil level. Add oil if needed. (See page 17)
	For flooded type batteries check for battery fluid leaks and proper fluid level. Add distilled water if needed. ***Note:*** *Sealed AGM type batteries don't require maintenance.*

Check the following components or areas for damage, improperly installed or missing parts and unauthorized modifications:

	Electrical components, wiring and electrical cables
	Hydraulic hoses, fittings, cylinders and manifolds
	Battery pack and connections
	Drive motors
	Rollers and slide blocks on masts
	Tires and wheels
	Lifting chains and idler wheels
	Mast and mast braces
	Limit switches, alarms and horn
	Nuts, bolts and other fasteners
	Platform entry gate and guard rail
	Alarms and beacons
	Platform extension
	Platform Control Panel
	Pothole guard
	Wire

Check entire machine for:

	Cracks in welds or structural components
	Dents or damage to machine
	Be sure that all structural and other critical components are present and all associated fasteners and pins are in right place and properly tightened.

WARNING

NEVER perform work or inspection on the machine with the platform elevated without first supporting the platform with either a forklift or a crane. Alternatively, use a 2"×4" or recommended a 4"×4" a piece of wood to support the mast section that is attached to the platform.

See page 8 for instructions.

Hydraulic Reservoir

Support the mast in the elevated position (refer to page 8 for maintenance safety).

With the mast properly supported at the correct height, remove the hydraulic tank cover plate and inspect hydraulic oil level.

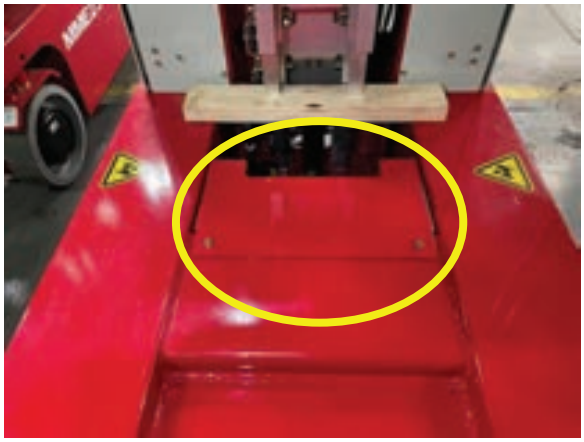

ART_5789A

Hydraulic Level should be between the 4L and 5L marks or 1” below the MIN Line with the platform raised and supported as shown.

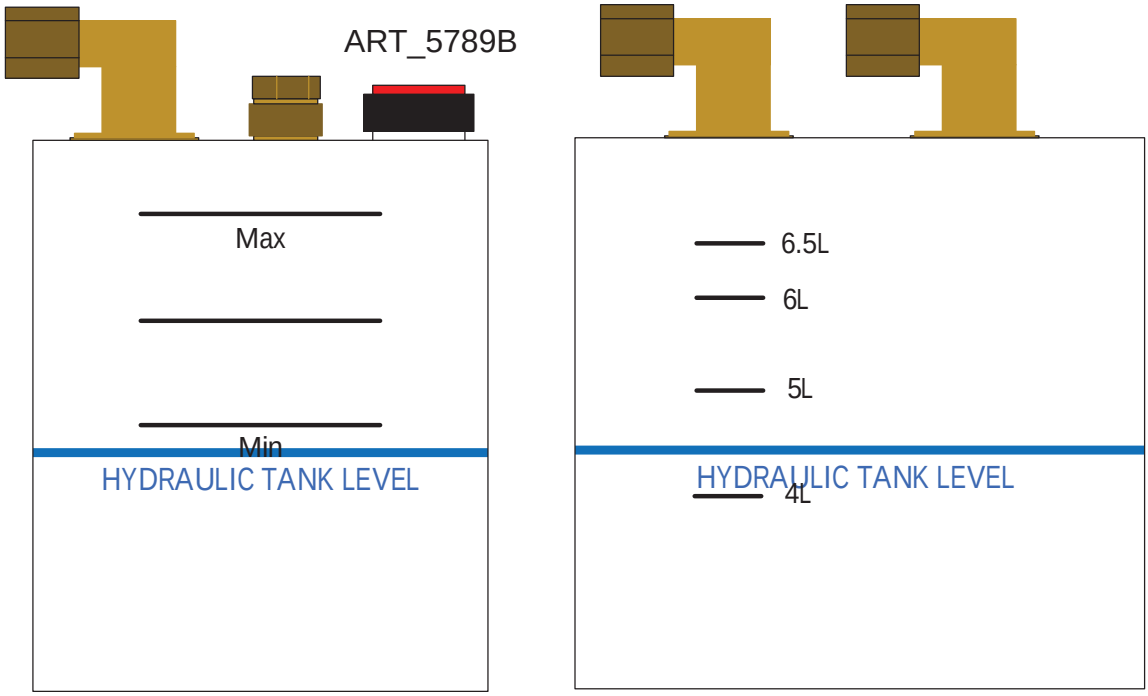

Maintenance Inspection Report

MME Series Mast Lifts

Fleet Equipment Number _____ **Date** _____

Inspector Name _____ **Inspector Co.** _____
Model Number _____ **Address** _____
Serial Number _____
Hour Meter _____ **Signature** _____

Machine Owner & address _____

Maintain all service records in accordance with ANSI A92.24-2019

*If an inspection receives an “N”, remove from service. Once repaired, place an “R” in the box.
*Refer to the proper service manual for specific information, settings and torque specifications.

Key **Y** = Yes, Acceptable **N** = No, Remove from Service **R** = Repaired **0** = Not Applicable

☐ **QUARTERLY** - Inspect only those marked “Q” ☐ **ANNUAL** - Inspect all items

	Q/A	Y/N/O	R
DECALS:			
Legible - undamaged/readable	Q		
Capacity decal correct for model	Q		
RAILS:			
Not damaged, all in place	Q		
All rail fasteners secure	Q		
Entry gate secure, closes properly	Q		
Manual box in good condition	Q		
Operators Manual in manual box	Q		
PLATFORM EXTENSION:			
Rolls in and out freely	Q		
Lock holds deck in place	Q		
Rel. Pin moves freely, retains platform	Q		
ELEVATING ASSEMBLY:			
Mast Slide Blocks, lubed	Q		
Mast structures: Straight, no cracks	Q		
Welds: secure, no cracks	Q		
Cables tensioned correctly	Q		
Chains secure, not stretched	A		
ELECTRICAL:			
GFCI operates correctly	Q		
Wire harnesses good condition, secure	A		
Comm cable no damage, secure	A		
BASE:			
Fasteners tight	Q		
Cover panels secure	Q		
Welds	A		

	Q/A	Y/N/O	R
WHEELS:			
Tire damage	Q		
Lug nuts (Wheel mounting) torqued correctly	Q		
King Pins lubed	A		
COMPONENT AREA:			
Hydraulic - no leaks	Q		
Hydraulic tank, correct level	Q		
Hoses not damaged - Fittings tight	Q		
Valve manifold secure, no leaks	Q		
Power unit secure, no leaks	Q		
Batteries properly filled and cables clean	Q		
Emergency stop, cuts power/operation	Q		
Battery switch cuts battery feed	Q		
Cover Doors secure, locks operate correctly	Q		
Hydraulic tank, oil clean	A		
Replace Hydraulic Filter	A		
Clean or replace tank breather filter	A		
OPERATIONAL INSPECTION:			
All functions, operate smooth and quiet	Q		
All functions, speeds correct.	Q		
Upper control box, operates correctly	Q		
Emergency Down, operates correctly	Q		
Limit switches slows drive when elevated	Q		
Indoor/outdoor limit swtch set test	Q		
Pothole switch test	Q		
Steering pressure relief, set correctly	A		
Lift pressure relief, set correctly	A		

Maintenance

Observe and Obey:

- Only routine maintenance items specified in this manual shall be performed by the operator.
- Scheduled maintenance inspections shall be completed by qualified service technicians, according to the manufacturer's specifications and the requirements specified in this manual.

Pre-delivery Preparation Report

The pre-delivery preparation report contains checklists for each type of scheduled inspection.

Make copies of the Pre-delivery Preparation report to use for each inspection. Store completed forms as required.

Maintenance Schedule

The types of maintenance inspections that must be performed according to the schedule are daily, quarterly, semi-annually, and annually.

Maintenance Inspection Report

The maintenance inspection report contains checklists for each type of scheduled inspection.

Make copies of the Maintenance Inspection Report to use for each inspection. Maintain completed forms for a minimum of 4 years or in compliance with your employer, jobsite and governmental regulations and requirements.

Pre-delivery Preparation Report

Fundamentals

It is the responsibility of the dealer to perform the Pre-delivery Preparation.

The Pre-delivery Preparation is performed prior to each delivery. The inspection is designed to discover if anything is apparently wrong with a machine before it is put into service.

A damaged or modified machine must never be used. If damage or any variation from factory delivered condition is discovered, the machine must be tagged and removed from service.

Repairs to the machine may only be made by a qualified service technician, according to the manufacturer's specifications.

Scheduled maintenance inspections shall be performed by qualified service technicians, according to the manufacturer's specifications and the requirements listed in this manual.

Instructions

- Use the operator's manual on your machine.
- The Pre-delivery Preparation consists of completing the Pre-operation Inspection, the Maintenance items and the Function Tests.
- Use this form to record the results. Place a check in the appropriate box after each part is completed. Follow the instructions in the operator's manual.
- If any inspection receives an N, remove the machine from service, repair and re-inspect it. After repair, place a check in the R box.

Legend
Y = Yes, Completed
N = No, Unable To Complete
R = Repaired

Pre-Delivery Preparation	Y	N	R
Pre-operation Inspection Completed			
Maintenance Items Completed			
Function Tests Completed			

Daily Inspections

Inspections that are to be performed every day or every 8 hours.

1 - Inspect the Manuals and Decals

Maintaining the operator's manual in good condition is essential to safe machine operation. Manuals are included with each machine and should be stored in the container provided in the platform. An illegible or missing manual will not provide safety and operational information necessary for a safe operating condition.

In addition, maintaining all of the safety and instructional decals in good condition is mandatory for safe machine operation. Decals alert operators and personnel to the many possible hazards associated with using this machine. They also provide users with operation and maintenance information. An illegible decal will fail to alert personnel of a procedure or hazard and could result in unsafe operating conditions.

1. Check to make sure that the operator manual is present and complete in the storage container on the platform.
2. Examine the pages of manual to be sure that they are legible and in good condition.
   - **Result:** The operator manual is appropriate for the machine and the manual are legible and in good condition.
   - **Result:** The operator's manual is not appropriate for the machine or the manual is not in good condition or is illegible. Remove the machine from service until the manual is replaced.
3. Open the operator's manual to the decals inspection section. Carefully and thoroughly inspect all decals on the machine for legibility and damage.
   - **Result:** The machine is equipped with all required decals, and all decals are legible and in good condition.
   - **Result:** The machine is not equipped with all required decals, or one or more decals are illegible or in poor condition. Remove the machine from service until the decals are replaced.
4. Always return the manual to the storage container after use.

For replacement decal(s) or manual(s), contact MEC Spare Parts.

2 - Perform Pre-operation Inspection

Completing a Pre-operation Inspection is essential to safe machine operation. The Pre-operation Inspection is a visual inspection performed by the operator prior to each work shift. The inspection is designed to discover if anything is apparently wrong with a machine before the operator performs the function tests. The Pre-operation Inspection also serves to determine if routine maintenance procedures are required.

Complete information to perform this procedure is available in the appropriate operator's manual. Refer to the Operator's Manual on your machine.

3 - Perform Function Tests

Completing the function tests is essential to safe machine operation. Function tests are designed to discover any malfunctions before the machine is put into service. A malfunctioning machine must never be used. If malfunctions are discovered, the machine must be tagged and removed from

service.

Complete information to perform this procedure is available in the appropriate operator's manual. Refer to the Operator's Manual on your machine.

4 - Perform 30 Day Service

- Tools will be required to perform this procedure.
- New parts will be required to perform this procedure.

The 30 day maintenance procedure is a one time procedure to be performed after the first 30 days or 40 hours of usage. After this interval, refer to the maintenance tables for continued scheduled maintenance.

1. Perform the following maintenance procedures:
   - Inspect the Tires and Wheels.

5 - Grease the Steer Yokes

- Tools will be required to perform this procedure.
- New parts will be required to perform this procedure.

This procedure is to be performed every 100 hours of operation.

Regular application of lubrication to the steer yokes is essential to good machine performance and service life. Continued use of an insufficiently greased steer yoke will result in component damage.

1. Open the steer yoke cover.
2. Pump multipurpose grease into the steer yoke until the steer yoke is full and grease is being forced past the bearings.
3. Install the cover.
4. Repeat this step for the other steer yoke.

Grease Specification - Chevron Ultra-duty grease, EP NLGI 1 (lithium based) or equivalent

Quarterly Inspections

Inspections that are to be performed every 3 months or every 250 hours.

1 - Inspect the Batteries

- Tools will be required to perform this procedure.
- New parts will be required to perform this procedure.

This procedure is to be performed every 3 months or every 250 hours, whichever comes first.

Proper battery condition is essential to good machine performance and operational safety. Improper fluid levels or damaged cables and connections can result in component damage and hazardous conditions.

WARNING **Electrocution / burn hazard. Contact with electrically charged circuits could result in death or serious injury. Remove all rings, watches and other jewelry.**

WARNING **Bodily injury hazard. Batteries contain acid. Avoid spilling or contacting battery acid. Neutralize battery acid spills with baking soda and water.**

---

1. Put on protective clothing and eye wear.
2. Be sure that the battery cable connections are free of corrosion.

Note: Adding terminal protectors and a corrosion preventative sealant will help eliminate corrosion on the battery terminals and cables.

3. Be sure that the battery retainers and cable connections are tight.
4. Fully charge the batteries. Allow the batteries to rest 24 hours before performing this procedure to allow the battery cells to equalize.

Models are equipped with maintenance free batteries. If models have maintenance free batteries then proceed to step 12.

Models without maintenance-free or sealed batteries:

5. Remove the battery vent caps and check the specific gravity of each battery cell with a hydrometer. Note the results.
6. Check the ambient air temperature and adjust the specific gravity reading for each cell as follows:
   - Add 0.004 to the reading of each cell for every 41.9°F (5.5°C) above 80°F (26.7°C).
   - Subtract 0.004 from the reading of each cell for every 41.9°F (5.5°C) below 80°F (26.7°C).
   - **Result:** All battery cells display an adjusted specific gravity of 1.277 or higher. The battery is fully charged. Proceed to step 10.
   - **Result:** One or more battery cells display a specific gravity of 1.217 or below. Proceed to step 7.
7. Perform an equalizing charge OR fully charge the batteries and allow the batteries to rest at

least 6 hours.

8. Remove the battery vent caps and check the specific gravity of each battery cell with a hydrometer. Note the results.
9. Check the ambient air temperature and adjust the specific gravity reading for each cell as follows:
   - Add 0.004 to the reading of each cell for every 41.9°F (5.5°C) above 80°F (26.7°C).
   - Subtract 0.004 from the reading of each cell for every 41.9°F (5.5°C) below 80°F (26.7°C).
   - **Result:** All battery cells display a specific gravity of 1 .277 or greater. The battery is fully charged. Proceed to step 10.
   - **Result:** The difference in specific gravity readings between cells is greater than 0.1 OR the specific gravity of one or more cells is less than 1.177. Replace the battery.
10. Check the battery acid level. If needed, replenish with distilled water to 3 mm below the bottom of the battery fill tube. Do not overfill.
11. Install the vent caps and neutralize any electrolyte with baking soda and water that may have spilled.

All models:

12. Check each battery pack and verify that the batteries are wired correctly.
13. Inspect the battery charger plug and pigtail for damage or excessive insulation wear. Replace as required.
14. Connect the battery charger to a properly grounded 110 - 230V / 50 – 60 Hz single phase AC power supply.
    - **Result:** The charger should operate and begin charging the batteries.
    - **Result:** If, simultaneously, the charger alarm sounds and the LEDs blink, correct the charger connections at the fuse and battery. The charger will then operate correctly and begin charging the batteries.

Note: For best results, use an extension of adequate size with a length no longer than 49 ft / 15 m.

Note: If you have any further questions regarding the battery charger operation, please contact MEC Product Support.

2 - Inspect the Electrical Wiring

- Tools will be required to perform this procedure.

This procedure is to be performed every 3 months or every 250 hours, whichever comes first.

Maintaining electrical wiring in good condition is essential to safe operation and good machine performance. Failure to find and replace burnt, chafed, corroded or pinched wires could result in unsafe operating conditions and may cause component damage.

WARNING **Electrocution / burn hazard. Contact with electrically charged circuits could result in death or serious injury. Remove all rings, watches and other jewelry.**

---

1. Inspect the underside of the chassis for damaged or missing ground strap(s).
2. Inspect the following areas for burnt, chafed, corroded and loose wires:

- Mast cable
- Platform controls
- Power to platform wiring
- Ground control panel
- Hydraulic power unit module cable

3. Turn the key switch to ground control and pull out the red Emergency Stop button to the ON position at both the ground and platform controls.
4. Raise the platform approximately 2 m from the ground.
5. Place a lifting strap from an overhead crane under the platform. Support the platform. Do not apply any lifting pressure.

WARNING **Component damage hazard. The platform railings can be damaged if they are used to lift the platform. Do not attach the lifting strap to the platform railings.**

---

6. Inspect for a liberal coating of dielectric grease in the following locations:
   - Between the ECU and platform controls
   - All wire harness connectors tilt sensor
7. Open the cover.
8. Inspect the battery tray for burnt, chafed and pinched cables.
9. Close the battery tray cover.
10. Remove the strap from the platform.
11. Lower the platform to the stowed position and turn the machine off.

3 - Inspect the Tires and Wheels (including castle nut torque)

- Tools will be required to perform this procedure.
- New parts will be required to perform this procedure.

This procedure is to be performed every 3 months or every 250 hours, whichever comes first.

Maintaining the tires and wheels in good condition is essential to safe operation and good performance. Tire and/or wheel failure could result in a machine tip-over. Component damage may also result if problems are not discovered and repaired in a timely fashion.

1. Check the tire surface and sidewalls for cuts, cracks, punctures and unusual wear.
2. Check each wheel for damage, bends and cracks.

4 - Test the Emergency Stop

This procedure is to be performed every 3 months or every 250 hours, whichever comes first.

A properly functioning Emergency Stop is essential for safe machine operation. An improperly operating red Emergency Stop button will fail to shut off power and stop all machine functions, resulting in a hazardous situation.

As a safety feature, selecting and operating the ground controls will override the platform controls, except the platform red Emergency Stop button.

1. Turn the key switch to ground control and pull out the red Emergency Stop button to the ON position at both the ground and platform controls.
2. Push in the red Emergency Stop button at the ground controls to the OFF position.
   - **Result:** No machine functions should operate.
3. Turn the key switch to platform control and pull out the red Emergency Stop button to the ON position at both the ground and platform controls.
4. Push down the red Emergency Stop button at the platform controls to the OFF position.
   - **Result:** No machine functions should operate.

Note: The red Emergency Stop button at the ground controls will stop all machine operation, even if the key switch is switched to platform control.

5 - Lubricate the Lifting Chains

- Tools will be required to perform this procedure.
- New parts will be required to perform this procedure.
- Dealer service will be required to perform this procedure.
- Use a spray lubricant designed for chain lubrication for best results.

Lubricated chains are essential to good machine performance and safe operation. Extremely dirty conditions may require that the chains be cleaned and lubricated more often.

The direct result of wearing the transmission chain is to stretch the total length of the chain. Measure the stretching rate of the used transmission chain by eye every three months. The mast connected to the elongated chain would be lower in position so that the top of each mast is obviously uneven in ‘stored’ position. It may lead to damage on guide roller if the problem is serious.

NOTICE **Every link of the transmission chain is associated with three links of the masts.**

1. Lower the platform to the stowed position.
2. Measure the maximum height of the machine.
   - **Result:** The machine should be no lower than specification.
   - **Result:** The machine should be lower than specification.

The sketch to the right shows the connection of the masts and the transmission chain.

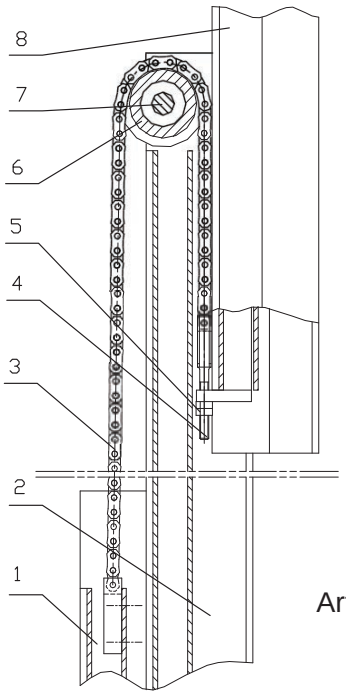

1 - Next link of the mast
2 - The middle link of the mast
3 - The transmission chain;
4 - Adjusting bolt
5 - Adjusting lock nut
6 - Chainwheel
7 - Chainwheel shaft
8 - The last link of the mast

Art_5671D

3. When regulating the length of the chain, please select the mast that needs increasing its height. As shown in the sketch, regulating the nut 5 tightly makes the last link of the mast 8 move upwards. The dual nuts 5 should be connected with each other tightly after regulating the length of the chain.
4. The same link of the mast is pulled by two chains and endures the raised weight loads at the same time. If one of the chains loses efficacy, the other will play an important safety role; therefore, try to make both chains as loose or tight as consistent each other when regulating the length of the chain. The methods of judge at site are as follows: Press the two chains by hands to compare their tautness under lifting status.

WARNING **Make sure the chock is in place during maintenance. Refer to page 8.**

WARNING **When the work platform of a Mast machine needs to be raised for routine servicing purposes, a captive chock shall be used to enable the extending structure to be held in the required position to prevent the work platform from falling down.**

6 - Clean and Lubricate the Columns

- Tools will be required to perform this procedure.
- New parts will be required to perform this procedure.
- Dealer service will be required to perform this procedure.
- Use calcium sulfonate grease like CRC SL 35615 or equivalent.

Clean and properly lubricated columns are essential to good machine performance and safe operation. Extremely dirty conditions may require that the columns be cleaned and lubricated more often.

1. Raise the platform to the maximum height.
2. Visually inspect the inner and outer channels of the columns for debris or foreign material. If necessary, use a mild cleaning solvent to clean the columns.
3. Lubricate the bearing between chain wheel and the shaft with the calcium sulfonate base grease while raising.
4. Lubricate the place between chain wheel with chain using a grease gun.
5. Lubricate the lead rail with the calcium sulfonate base grease while raising.

WARNING **This procedure will require the use of additional access equipment. Do not place ladders or scaffold on or against any part of the machine. Performing this procedure without the proper skills and tools may result in death or serious injury. Dealer service is strongly recommended.**

7 - Test the Up Limit Switch

- Tools will be required to perform this procedure.

Maintaining the limit switches is essential to safe operation and good machine performance.

Operating the machine with a faulty limit switch could result in reduced machine performance and a potentially unsafe operating condition.

Perform these procedures with the machine on a firm, level surface that is free of obstructions.

1. Turn the key switch to ground control.
2. Turn the select switch to outdoor.
3. While raising the platform from the ground controls, push in the roller of the lower up limit switch to activate the limit switch.
   - **Result:** The platform stops raising. The machine is functioning properly.
   - **Result:** The platform continues to raise. Adjust or replace the up limit switch.
4. Lower the platform to the end.
5. Turn the select switch to indoor.
6. While raising the platform from the ground controls, push in the roller of the upper up limit switch to activate the limit switch.
   - **Result:** The platform stops raising. The machine is functioning properly.
   - **Result:** The platform continues to raise. Adjust or replace the up limit switch.

8 - Test the Key Switch

This procedure is to be performed every 3 months or every 250 hours, whichever comes first.

Proper key switch action and response is essential to safe machine operation. The machine can be operated from the ground or platform controls and the activation of one or the other is accomplished with the key switch. Failure of the key switch to activate the appropriate control panel could cause a hazardous operating situation.

Perform this procedure from the ground using the platform controls. Do not stand in the platform.

1. Pull out the red Emergency Stop button to the ON position at both the ground and platform controls.
2. Turn the key switch to platform control.
3. Check the platform up/down function from the ground controls.
   - **Result:** The machine functions should not operate.
4. Turn the key switch to ground control.
5. Check the machine functions from the platform controls.
   - **Result:** The machine functions should not operate.
6. Turn the key switch to the OFF position.
   - **Result:** No function should operate.

9 - Test the indoor/outdoor select Functions

Note: Perform this test from the ground with the platform controller. Do not stand in the platform. Make sure there is safe height clearance and no overhead obstruction or electrical power wires.

1. Turn the key switch to ground control position.
2. Turn the indoor/outdoor switch to outdoor position.

3. Move up and hold the platform up / down switch. Raise the platform to the highest position and measure the platform height.
   - **Result:** The platform height shall not exceed 16 ft / 4.8 m (MME20), 20 ft / 6 m (MME25).
4. Turn the indoor/outdoor switch to indoor position.
5. Move up and hold the platform up / down switch. Raise the platform to the highest position and measure the platform height
   - **Result:** The platform continued to rise to a height of about 20 ft / 6 m (MME20), 25 ft / 7.5 m (MME25).
6. Turn the indoor/outdoor switch to outdoor position.
   - **Result:** The alarm should sound.
7. Turn the indoor/outdoor switch to indoor position fully lower the platform.
8. Turn the key switch to platform control position.
9. Turn the indoor/outdoor switch to outdoor position.
10. Press the lift function select button.
11. Press and hold the function enable switch on the control handle.
12. Slowly move the control handle in the direction indicated by the yellow arrow. Raise the platform to the highest position and measure the platform height
    - **Result:** The platform height shall not exceed 16 ft / 4.8 m (MME20), 20 ft / 6 m (MME25).
13. Turn the indoor/outdoor switch to indoor position
14. Press and hold the function enable switch on the control handle.
15. Slowly move the control handle in the direction indicated by the yellow arrow. Raise the platform to the highest position and measure the platform height
    - **Result:** The platform continued to rise to a height of about 20 ft / 6 m (MME20), 25 ft / 7.5 m (MME25).
16. Turn the indoor/outdoor switch to outdoor position.
    - **Result:** The alarm should sound.

Turn the indoor/outdoor switch to indoor position. Fully lower the platform.

10 - Test the Automotive-style Horn

This procedure is to be performed every 3 months or every 250 hours, whichever comes first.

The horn is activated at the platform controls and sounds at the ground as a warning to ground personnel. An improperly functioning horn will prevent the operator from alerting ground personnel of hazards or unsafe conditions.

1. Turn the key switch to platform control and pull out the red Emergency Stop button to the ON position at both the ground and platform controls.
2. Push down the horn button at the platform controls.
   - **Result:** The horn should sound.

11 - Test the Drive Brakes

- Tools will be required to perform this procedure.

This procedure is to be performed every 3 months or every 250 hours, whichever comes first.

Proper brake action is essential to safe machine operation. The drive brake function should operate smoothly, free of hesitation, jerking and unusual noise.

Hydraulically-released individual wheel brakes can appear to operate normally when not fully operational.

Perform this procedure with the machine on a firm level surface that is free of obstructions, with the platform extension deck fully retracted and the platform in the stowed position.

1. Mark 2 test lines on the ground for reference.
2. Turn the key switch to platform control and pull out the red Emergency Stop button to the ON position at both the ground and platform controls.
3. Lower the platform to the stowed position.
4. Press the drive function select button on the upper controls.

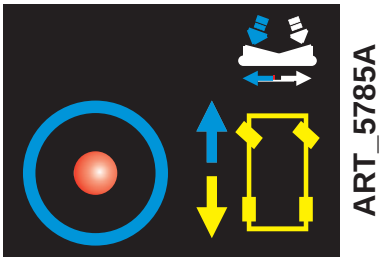

Drive Function Select Button

5. Choose a point on the machine; i.e., contact patch of a tire, as a visual reference for use when crossing the test line.
6. Bring the machine to top drive speed before reaching the test line. Release the function enable switch or the joystick when your reference point on the machine crosses the test line.
7. Measure the distance between the test line and your machine reference point.
   - **Result:** The machine stops within the specified braking distance. No action required.
   - **Result:** The machine does not stop within the specified braking distance.

Note: The brakes must be able to hold the machine on any slope it is able to climb.

8. Replace the brakes and repeat this procedure beginning with step 1.

Braking Distance, Maximum	
High range on paved surface	24in±12in 61cm±30cm

12 - Test the Drive Speed - Stowed Position

- Tools will be required to perform this procedure.

This procedure is to be performed every 3 months or every 250 hours, whichever comes first.

Proper drive functions are essential to safe machine operation. The drive function should respond quickly and smoothly to operator control. Drive performance should also be free of hesitation, jerking and unusual noise over the entire proportionally controlled speed range.

Perform this procedure with the machine on a firm, level surface that is free of obstructions.

1. Create start and finish lines by marking two lines on the ground 40 ft / 12.2 m apart.
2. Turn the key switch to platform control and pull out the red Emergency Stop button to the ON position at both the ground and platform controls.
3. Lower the platform to the stowed position.
4. Press the drive function select button.
5. Choose a point on the machine; i.e., contact patch of a tire, as a visual reference for use when crossing the start and finish lines.
6. Bring the machine to top drive speed before reaching the start line. Begin timing when your reference point on the machine crosses the start line.
7. Continue at full speed and note the time when your reference point on the machine passes over the finish line. Refer to chart on next page.

13 - Test the Drive Speed - Raised Position

- Tools will be required to perform this procedure.

This procedure is to be performed every 3 months or every 250 hours, whichever comes first.

Proper drive functions are essential to safe machine operation. The drive function should respond quickly and smoothly to operator control. Drive performance should also be free of hesitation, jerking and unusual noise over the entire proportionally controlled speed range.

Perform this procedure with the machine on a firm, level surface that is free of obstructions.

1. Create start and finish lines by marking two lines on the ground 40 ft / 12.2 m apart.
2. Turn the key switch to platform control and pull out the red Emergency Stop button to the ON position at both the ground and platform controls.
3. Press the lift function select button on the upper controls.

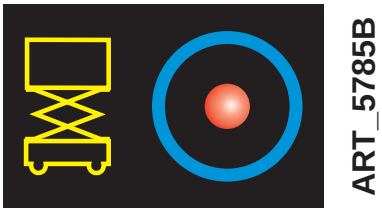

Lift Function Select Button

4. Press and hold the function enable switch on the joystick.
5. Raise the platform approximately 6.6 ft / 2 m from the ground.
6. Press the drive function select button on the upper controls.

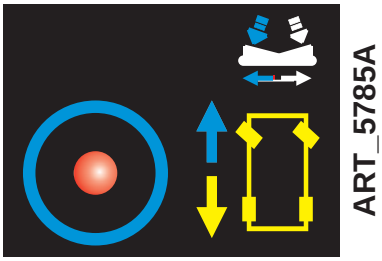

Drive Function Select Button

Position	Drive Speed
Stowed	3.7 ft/sec (1.11 m/sec)
Raised	1.03 ft/sec (0.31 m/sec)

7. Choose a point on the machine; i.e., contact patch of a tire, as a visual reference for use when crossing the start and finish lines.

8. Bring the machine to top drive speed before reaching the start line. Begin timing when your reference point on the machine crosses the start line.
9. Continue at full speed and note the time when your reference point on the machine passes over the finish line. Refer to specifications.

14 - Perform Hydraulic Oil Level and Hydraulic Oil Analysis

- Tools will be required to perform this procedure.
- New parts will be required to perform this procedure.
- Dealer service will be required to perform this procedure.

This procedure is to be performed every 3 months or every 250 hours, whichever comes first.

Replacement or testing of the hydraulic oil is essential for good machine performance and service life. Dirty oil may cause the machine to perform poorly and continued use may cause component damage. Extremely dirty conditions may require oil changes to be performed more often.

Before replacing the hydraulic oil, the oil may be tested by an oil distributor for specific levels of contamination to verify that changing the oil is necessary.

If the hydraulic oil is not replaced at the two year inspection, test the oil quarterly. Replace the oil when it fails the test. See page page 36 for Test or Replace the Hydraulic Oil.

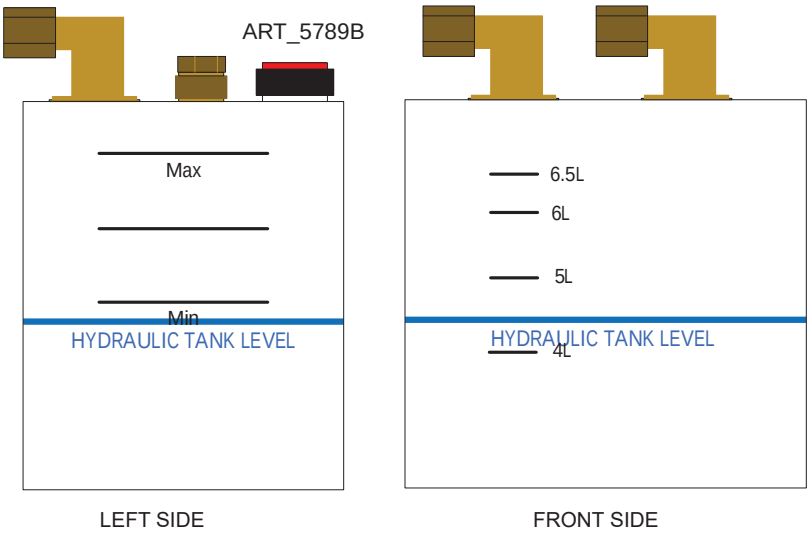

15 - Inspect the Hydraulic Tank Cap Venting System

- Tools will be required to perform this procedure.

This procedure is to be performed every 3 months or every 250 hours, whichever comes first.

Perform this procedure more often if dusty conditions exist.

A free-breathing hydraulic tank cap is essential for good machine performance and service life. A dirty or clogged cap may cause the machine to perform poorly. Extremely dirty conditions may require that the cap be inspected more often.

1. Open the cover.

2. Remove the breather cap from the hydraulic tank.
3. Check for proper venting.
   - **Result:** Air passes through the breather cap.
   - **Result:** If air does not pass through the cap, clean or replace the cap. Proceed to step 4.

Note: When checking for positive tank cap venting, air should pass freely through the cap.

4. Using a mild solvent, carefully wash the cap venting system. Dry using low pressure compressed air. Repeat step 3.
5. Install the breather cap onto the hydraulic tank.
6. Install the cover.

16 - Inspect the system of wire ropes

Maintaining the system of wire ropes in good condition assures proper column sequencing.

1. Raise the platform approximately 6.6 ft / 2 m
2. Visually inspect condition of every wire rope and both ends.
   - Excessive corrosion or contamination
   - Untightened wire ropes
   - Deformed seat plates
   - Missing or damaged related components
3. Inspect the chain terminations near the bottom of each column to confirm that each seat plate has a lock nut.

Semi-annually Inspections

Inspections that are to be performed every 6 months or every 500 hours.

1 - Test the Platform Overload System (if equipped)

- Tools will be required to perform this procedure.
- Dealer service will be required to perform this procedure.
- Test weight will be required for this procedure.

This procedure is to be performed every 6 months or every 500 hours, whichever comes first or when the machine experiences an overload fault.

Testing the platform overload system regularly is essential to safe machine operation.

Continued use of an improperly operating platform overload system could result in the system not sensing an overloaded platform condition. Machine stability could be compromised resulting in the machine tipping over.

WARNING **Perform this procedure with the machine on a firm, level surface.**

---

1. Turn the key switch to platform control and pull out the red Emergency Stop button to the ON position at both the ground and platform controls.
2. Determine the maximum platform capacity.
3. Using a suitable lifting device, place an appropriate test weight equal to the maximum platform capacity in the center of the platform floor.
   - **Result:** The overload alarm at the platform controls should not sound, indicating a normal condition.
   - **Result:** The overload alarm at the platform controls sounds. Calibrate the platform overload system. See Calibration section for instructions.
4. Add an additional weight to the platform not to exceed 10% of the maximum rated load.
   - **Result:** The overload alarm at the platform controls sound, indicating a normal condition.
   - **Result:** The overload alarm at the platform controls does not sound. Calibrate the platform overload system. See Calibration section for instructions.
5. Test all machine functions from the platform controls.
   - **Result:** All platform control functions should not operate.
6. Turn the key switch to ground control.
7. Test all machine functions from the ground controls
   - **Result:** All ground control functions should not operate.
8. Lift the test weight off the platform floor using a suitable lifting device.
   - **Result:** The overload alarm at the platform controls should not sound, indicating a normal condition.
   - **Result:** The overload alarm at the platform controls sounds. Calibrate the platform overload system. See Calibration section for instructions.
9. Test all machine functions from the ground controls.
   - **Result:** All ground control functions should operate.
10. Turn the key switch to platform control.

11. Test all machine functions from the platform controls.
    - **Result:** All platform control functions should operate.

2 - Replace the Hydraulic Tank Breather Cap

- New parts will be required to perform this procedure.

This procedure is to be performed every 6 months or every 500 hours, whichever comes first.

The hydraulic tank is a vented-type tank. The breather cap has an internal air filter that can become clogged or, over time, can deteriorate. If the breather cap is faulty or improperly installed, impurities can enter the hydraulic system which may cause component damage. Extremely dirty conditions may require that the cap be inspected more often.

1. Open the cover.
2. Remove and discard the hydraulic tank breather cap.
3. Install a new cap onto the tank.
4. Install the cover.

Yearly Inspections

Inspection that is to be performed every year or every 1,000 hours.

1 - Test or Replace the Hydraulic Oil

- Tools will be required to perform this procedure.
- New parts will be required to perform this procedure.
- Dealer service will be required to perform this procedure.

This procedure is to be performed every year or every 1,000 hours, whichever comes first.

Replacement or testing of the hydraulic oil is essential for good machine performance and service life. Dirty oil may cause the machine to perform poorly and continued use may cause component damage. Extremely dirty conditions may require oil changes to be performed more often.

Before replacing the hydraulic oil, the oil may be tested by an oil distributor for specific levels of contamination to verify that changing the oil is necessary.

If the hydraulic oil is not replaced at the two year inspection, test the oil quarterly. Replace the oil when it fails the test.

Note: Perform this procedure with the platform in the stowed position.

1. Disconnect the battery pack from the machine.
2. Fully lower the platform.

WARNING **Electrocution / burn hazard. Contact with electrically charged circuits could result in death or serious injury. Remove all rings, watches and other jewelry.**

---

3. Remove the cover.
4. Tag and disconnect the hydraulic pump outlet line and remove the line from the pump. Cap the fitting on the pump.
5. Loose the bolt and remove the tank form the tray.
6. Remove the tank.
7. Drain all of the oil into a suitable container.

WARNING **Bodily injury hazard. Spraying hydraulic oil can penetrate and burn skin. Loosen hydraulic connections very slowly to allow the oil pressure to dissipate gradually. Do not allow oil to squirt or spray.**

---

8. Clean up any oil that may have spilled. Properly discard the used oil.
9. Clean the inside of the hydraulic tank using a mild solvent. Allow the tank to dry completely.
10. Install the hydraulic tank and install and tighten the hydraulic tank retaining fasteners. Torque to specification.

Torque Specifications	
Hydraulic Tank Retaining Fasteners, Dry	4 Nm
Hydraulic Tank Retaining Fasteners, Lubricated	2.9 Nm

11. Install the hydraulic power pack into the tray. Install the fitting and hydraulic hoses onto the hydraulic power pack and torque.
12. Fill the tank with hydraulic oil until the fluid is full in the hydraulic tank. Do not overfill.
13. Activate the pump to fill the hydraulic system with oil and bleed the system of air.

WARNING

Component damage hazard. The pump can be damaged if operated without oil. Be careful not to empty the hydraulic tank while in the process of filling the hydraulic system. Do not allow the pump to cavitate.

Control Component Locations

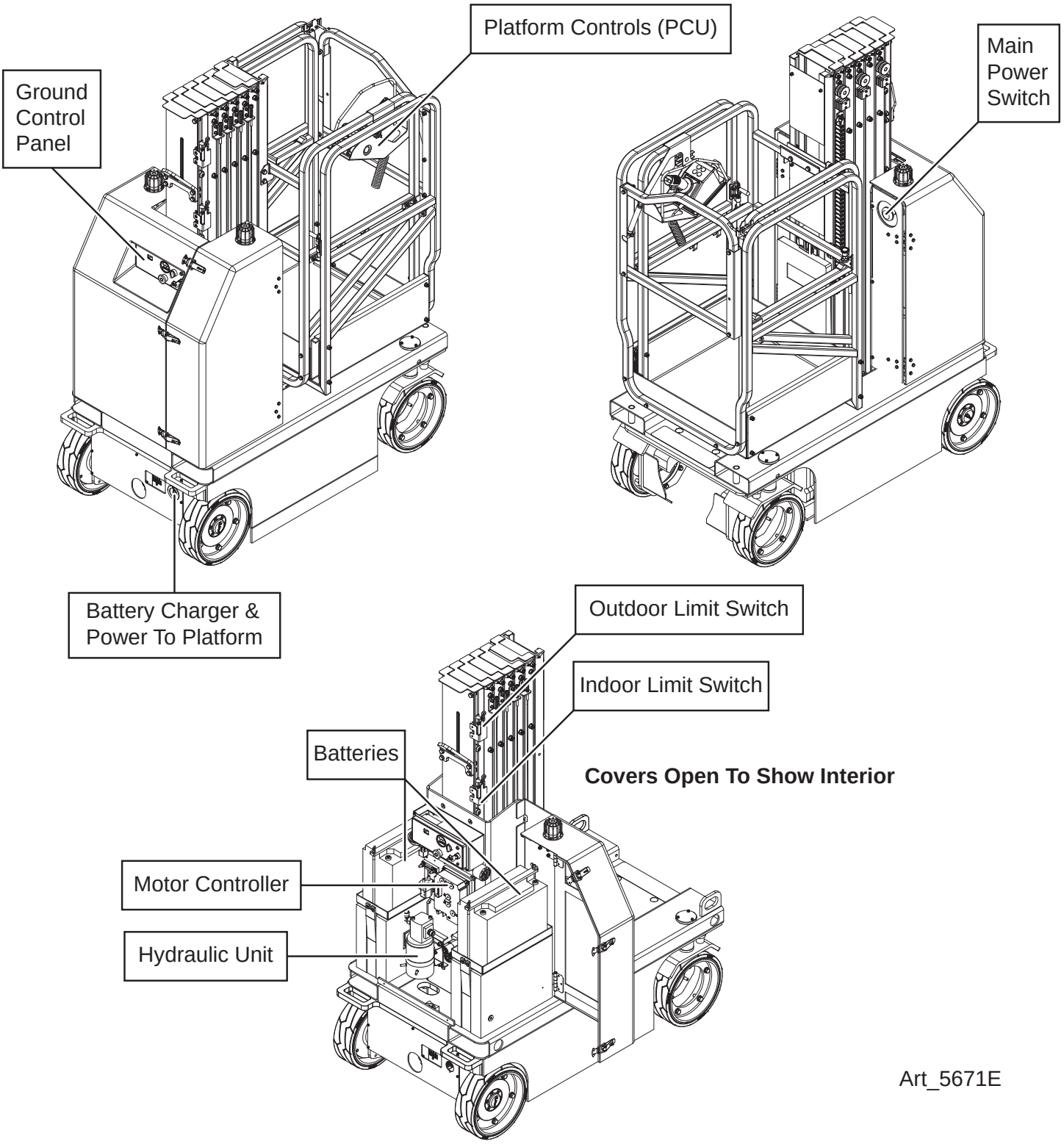

Fault Codes

Fault Codes, when present, appear on the LED Indicator at the Upper Controls station and on the LED Screen at the Lower Controls station.

Upper Controls

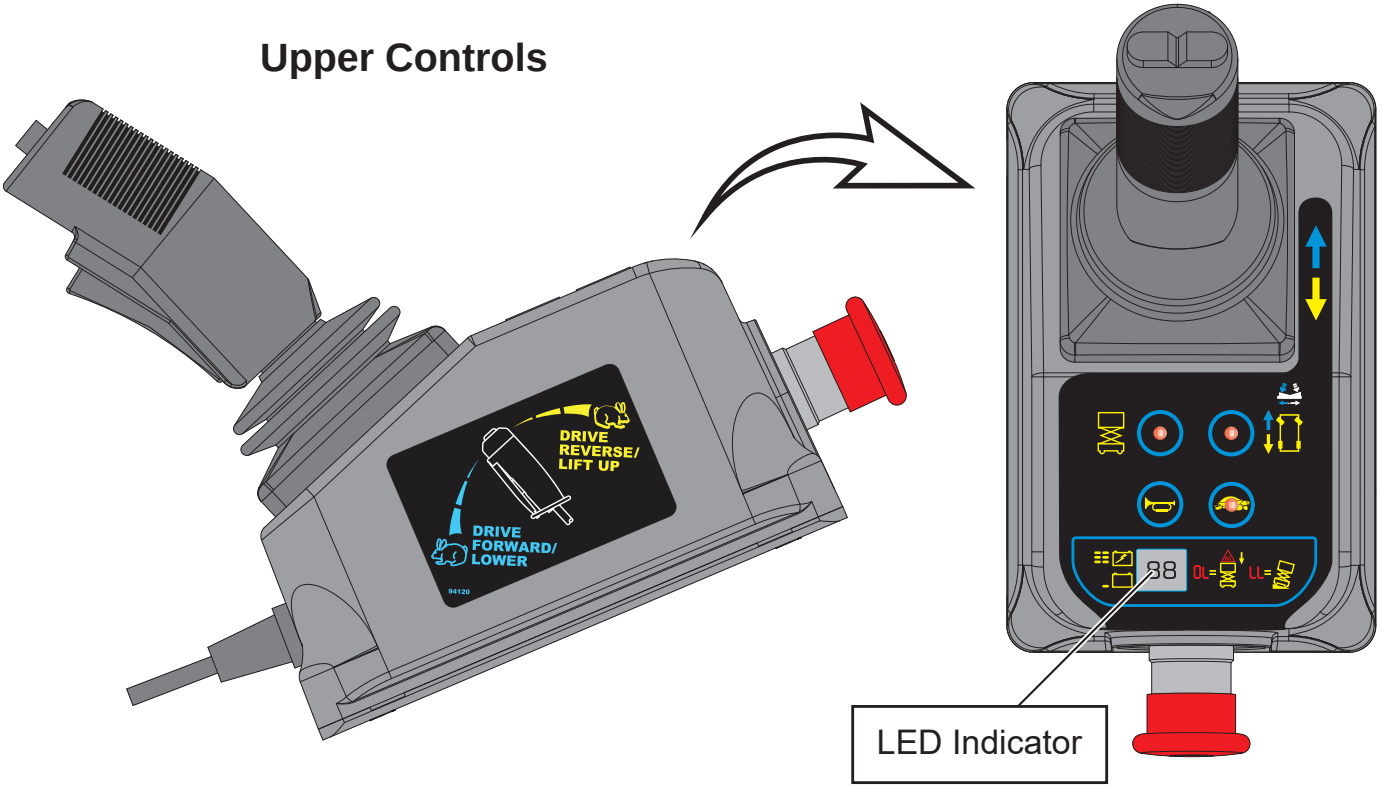

Lower Controls

Art_5592D

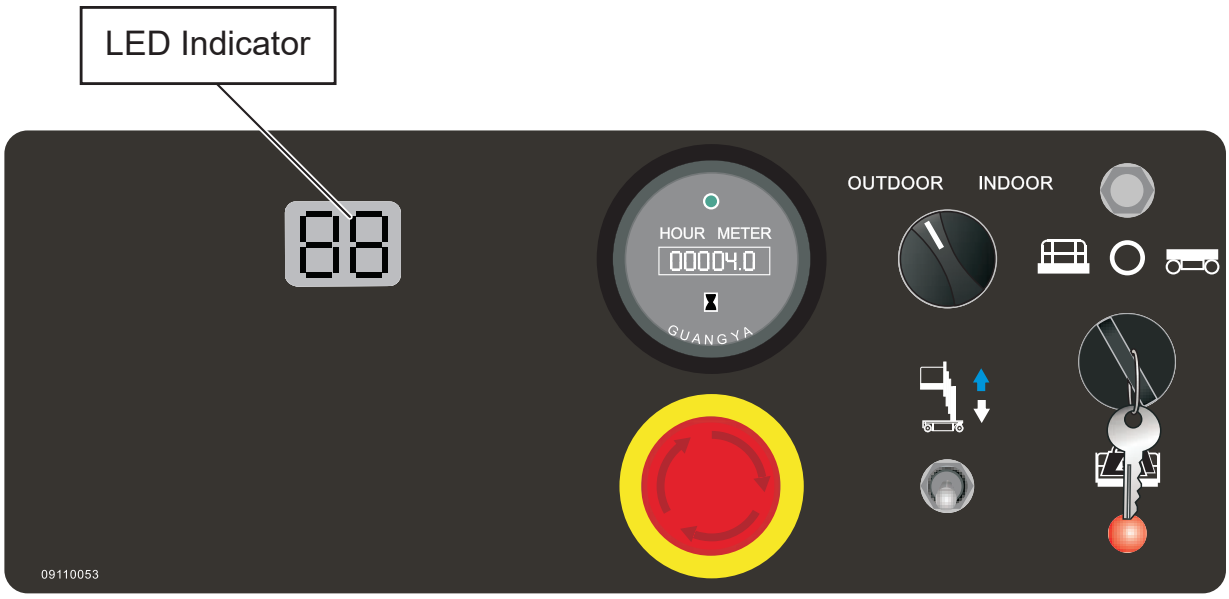

Error Indicator Readout

Art_5533

If the LED diagnostic readout displays an error code, such as LL, push in and turn the red Emergency Stop button to reset the system.

Fault	Description	Models	Solutions
01/10	System Initialization Fault	All Models	Check ECU
02/20	System Communication Fault	All Models	Check platform control box, check wiring to platform connector, check ECU, check battery voltage, check relay in lower cabinet
		Micro26®	Check height sensor, check pressure sensor
03	Invalid Option Setting	All Models	Reset option code
12	Chassis Up Or Down Switch ON At Power-Up	All Models	Check wiring to toggle switch, check toggle switch
18	Pothole Guard Fault	All Models	Check pothole limit switch, check pothole bar functionality, recalibrate height
30/35	No Functions	All Models	Remove telematics from hour meter
31	Pressure Sensor Fault	All Models	Check option code (older machines), check wiring to pressure sensor, check pressure sensor, recalibrate overload
32	Angle Sensor Fault	All Models	Check wiring to angle sensor (operating range 1.9-3.8V), check option code
36	Low Voltage Fault	All Models (Newer Machines)	Check battery voltage, check battery connections, load test batteries, replace batteries ONLY if necessary, charge machine
42	Left Turn Switch ON At Power-Up	All Models	Check joystick left steer button, check platform controller, replace joystick
43	Right Turn Switch ON At Power-Up	All Models	Check joystick right steer button, check platform controller, replace joystick
46	Joystick Enable Switch ON At Power-Up	All Models	Enable pushed before self-check finished, check dead-man switch, replace joystick
47	Joystick Not In Neutral At Power-Up	All Models	Check joystick for centering, replace joystick
52	Drive Forward Coil Fault	All Models	Check option code
53	Drive Reverse Coil Fault	All Models	Check option code
54	Up Coil Fault	All Models	Check lift coil for voltage, check resistance on coil, replace lift coil
55	Down Coil Fault	All Models	Check down coil for voltage, check resistance on coil, replace down coil
56	Right Steer Coil Fault	All Models	Check steer coil for voltage, check resistance on coil, replace steer coil
57	Left Steer Coil Fault	All Models	Check steer coil for voltage, check resistance on coil, replace steer coil
58	Brake Coil Fault • Brakes Are 46 Ohms	All Models	Check brake module and wiring, check brakes and wiring, check battery voltage
60	Motor Controller Fault	All Models	Cycle power to machine, replace motor controller

61	Motor Controller Sensor Fault	All Models	Check drive motor and wiring, check motor controller wiring, change option code, replace motor controller
62	Motor Controller Hardware Fail Safe Fault	All Models	Cycle power, check brake switch functionality and wiring, tighten drive motor connections, replace motor controller
63	Motor Controller Output Fault	All Models	Cycle power, tighten drive motor connections, replace motor controller
64	Motor Controller Fault	All Models	Replace motor controller
65	Motor Controller Throttle Fault	All Models	Check wiring to controller, replace motor controller
66	Motor Controller Reverse Fault	All Models	Replace motor controller
67	Motor Controller HPD Fault	All Models	Check contactor, change option code, replace ECU, replace motor controller
68	Low Voltage Fault	All Models	Check battery voltage, check battery connection, load test batteries, replace batteries ONLY if necessary, charge machine
69	High Neutral Current Fault	All Models	Motor controller thinks the brakes are on and the motors are still running (this message comes just before other faults, should be ignored in those cases), replace motor controller
70	Steer Input Out Of Range	All Models	Check for loose connection at motor controller, replace motor controller
71	Motor Controller Main Contactor Fault	All Models	Check wiring to contactor (check white & black for connection & voltage), check drive motor and wiring, check motor controller wiring
72	Motor Controller Over Voltage Fault	All Models	Check battery voltage (battery charger must NOT be connected), cycle power to machine, replace motor controller
73	Motor Controller	All Models	Drive or lift motor may be overheating (let the lift cool down), cycle power to machine, replace motor controller
74	Motor Controller Motor Fault	All Models	Check connections to motors, check wiring to motors, cycle power to the lift, replace motor controller
75	Motor Controller Pump Motor Fault	All Models	Check connections on pump motor, tap on pump motor (brushes possibly stuck), cycle power to machine, replace pump, replace motor controller
76	Motor Controller Left Drive Motor Fault	All Models	Check drive motor terminals, cycle power to the lift, replace motor controller
77	Motor Controller Right Drive Motor Fault	All Models	Check drive motor terminals, cycle power to the lift, replace motor controller
78	Pump Motor Short Fault • Should Be 0.8 To 1.4 Ohms	All Models	Check connections on pump motor, tap on pump motor (brushes possibly stuck), cycle power to machine, replace motor controller
79	Left Drive Motor Short • Should Be 0.5 To 2.0 Ohms For Micro19	1930SE ONLY	Check left drive motor terminal, check motor controller wiring
		Micro19®	Swap drive motor wires (if code changes trace wiring, if it does not replace motor controller), tighten drive motor terminals

80	Over 80% Load Warning	All Models	Platform capacity close to limit of weight (consider not adding more load)
81	Right Drive Motor Short	1930SE/Micro19®	Check right drive motor and wiring, check motor controller and wiring
82	Right Brake Coil • Brakes Should Be 46 Ohms On Micro19 And 26 Ohms For All Others	All Models	Check battery voltage, check right brake terminals, check brake module and wiring, check contactor, check option code, check fuse near motor controller, replace ECU
83	Left Brake Coil	All Models	Check battery voltage, check left brake terminals, check brake module wiring, check contactor
		1930SE/Micro19®	Check drive motor terminals, check fuse connected to motor controller, replace motor controller
85	Brake Release Switch Closed	1930SE/Micro19® ONLY	Turn brake release switch off
86	Raised Brake Release Fault	1930SE ONLY	Brake release switch engaged when elevated
87	Brake Release Switch Fault	1930SE ONLY	Brake release switch is open
89	Drive Motor Field Open Fault	All Models	Check wiring on motors, check wiring to motor controller
90	Over 90% Load Warning	All Models	Platform getting close to weight capacity
91	Left Drive Motor Short	All Models	Check wiring to motor, check wiring to motor controller
92	Right Drive Motor Short	All Models	Check wiring to motor, check wiring to motor controller
99	Over 99% Load Warning	All Models	Platform has reached load capacity.
OL	Platform Overloaded	All Models	Remove excess load
LL	Tilted	All Models	Check wiring to tilt sensor, recalibrate tilt
H9	Height Not Calibrated	All Models	Calibrate height
CH	Not A Fault Code	All Models	Machine is in chassis controls

Option Code For Machines		
Model	**Older**	**With Overload (Yellow Gate)**
MICRO19®	To Serial #16900460 58 From Serial #16900461 62	E2
MICRO19XD®	N/A	E3
MICRO26®	N/A	27
1930SE	58	--
2632SE, 3346SE, 4046SE, 4555SE	30,26	A7
MME20, MME25	N/A	A7

Electrical Schematic

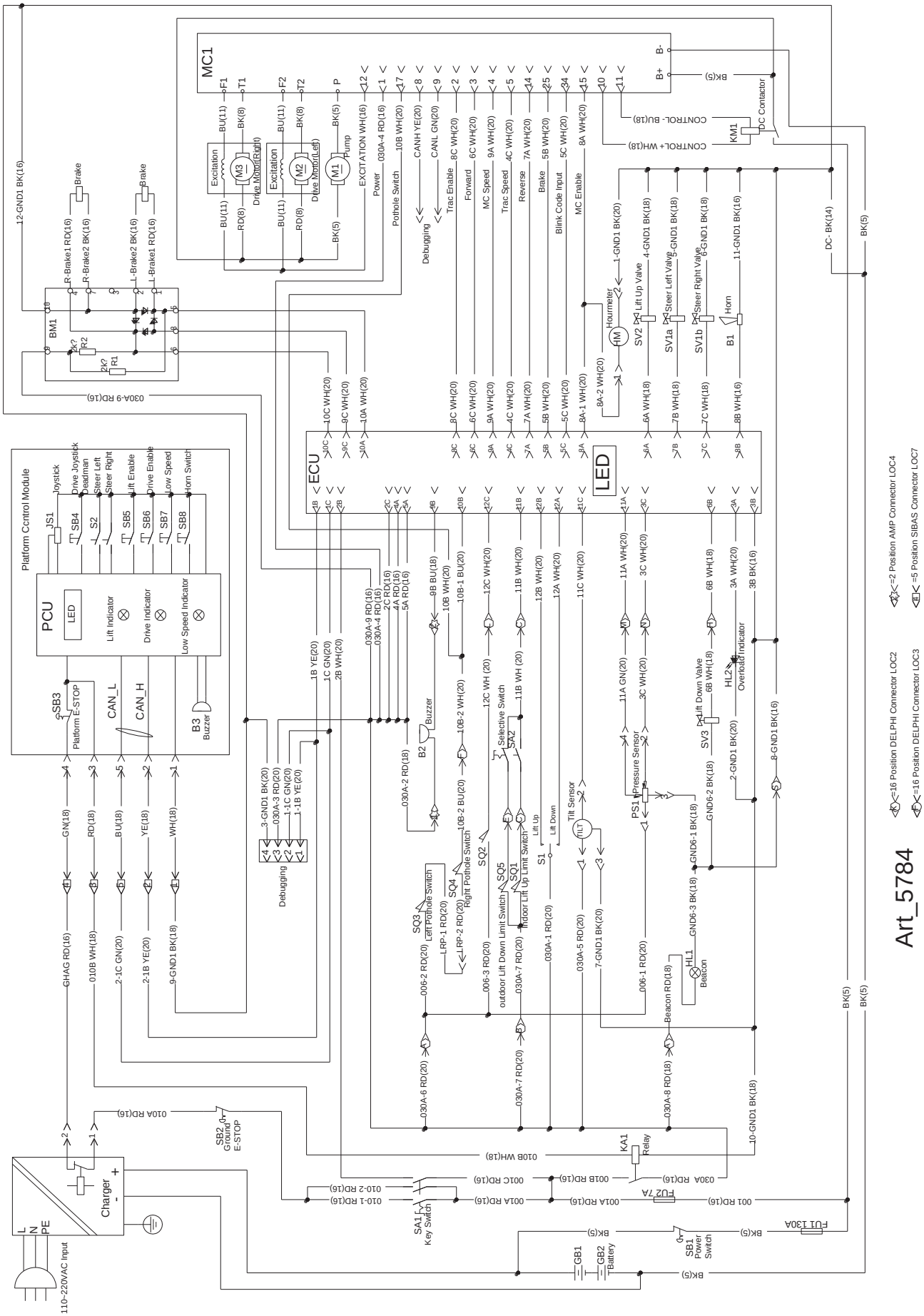

Hydraulic Schematic

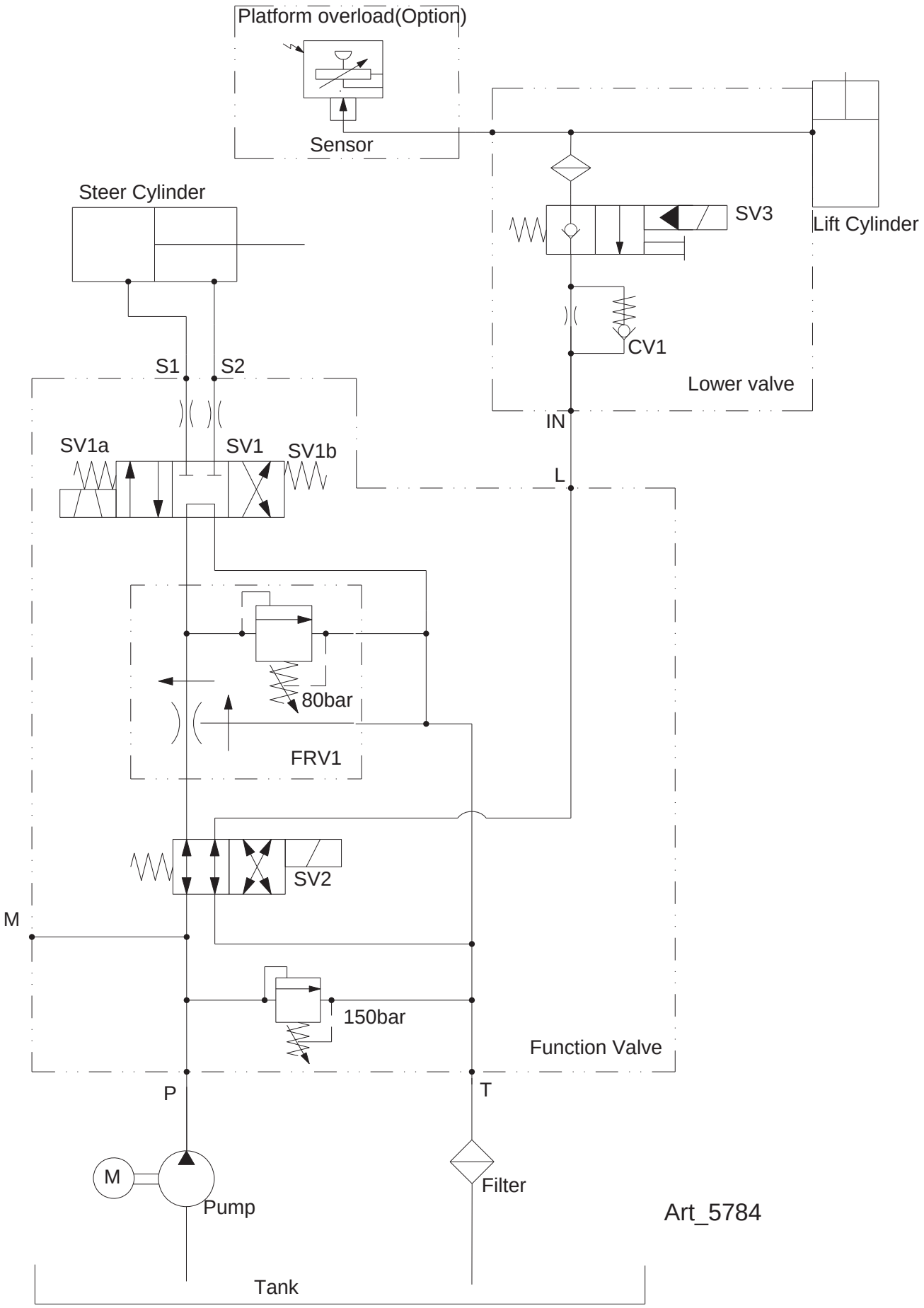

Calibration Instructions

The Platform Overload Sensing System may require calibration in the event of a malfunction or after the replacement of an Overload System component. Proper and correct calibration of the Overload system is critical for normal and trouble-free machine operation. Read and understand the instructions before beginning the calibration process.

Calibrate Tilt Sensor

1. Park the machine on flat level surface.
   Note: Calibrating the level sensor requires that the machine be perfectly level on both the X and Y axis. An inclinometer should be used when ensuring level. Machine power must be on.
2. Using the diagram below, locate the “SET ZERO” button located on the side of the sensor. Press and hold the “SET ZERO” button until the LEDs alternate red and green flashes. Release the button.
3. Press the “SET ZERO” button three times. The LEDs will turn off then only the green LED will illuminate, calibration is complete.

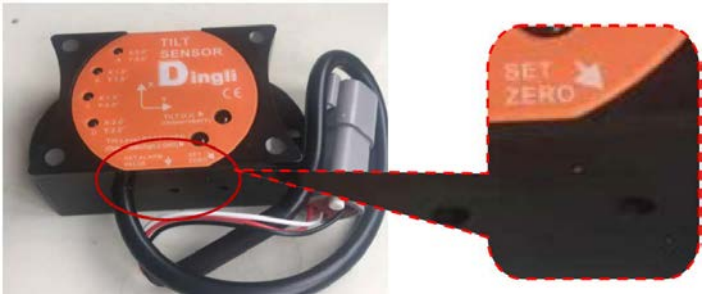

Calibrate Overload System

Note: The platform **<u>will lift automatically</u>** once the calibration has been initiated. Be sure that there are **<u>no overhead obstructions</u>** when choosing a location on which to calibrate the overload system.

Note: If a safety concern arises anytime during the automated lift/lower sequence, press the Emergency Stop switch immediately. The procedure can be restarted once it is safe to do so.

Empty Platform Sequence

1. Park the machine on flat level surface. Machine power must be on. Ensure that the platform is completely empty and there are no ‘extra’ items attached to the platform or guard rails that may add weight to the platform beyond that of an empty platform.
2. Turn the key switch to the Platform position. This will prevent the platform from lifting during the next step.
3. Using the lower Lift Switch (located on the lower control panel) perform the following sequence of up and down movement of the toggle switch. Do not operate the switch so slowly as to hold the switch more than 2.5 seconds or the sequence will be terminated.
   a. Down 5 times
   b. Up 1 time
   c. Down 5 times
   d. Up 1 time

   e. Down 1 time
   f. Up 1 time
   g. Down 3 times
4. The process will be complete when the platform returns to the fully lowered and the horn stops sounding. Cycle Emergency Stop power and continue to the Loaded calibration steps.

Loaded Platform Sequence

1. Park the machine on flat level surface. Machine power must be on. Ensure that the platform is completely empty and there are no ‘extra’ items attached to the platform or guard rails that may add weight to the platform beyond that of an empty platform.
2. Place weight in the center of the platform equal to rated platform capacity (350 LBS).
3. Turn the key switch to the Platform position. This will prevent the platform from lifting during the next step.
4. Using the lower Lift Switch (located on the lower control panel) perform the following sequence of up and down movement of the toggle switch. Do not operate the switch so slowly as to hold the switch more than 2.5 seconds or the sequence will be terminated.
   a. Down 5 times
   b. Up 1 time
   c. Down 5 times
   d. Up 1 time
   e. Down 5 time
5. The process will be complete when the platform returns to the fully lowered and the horn stops sounding. Once the Empty and the Loaded sequences are complete, the Platform Overload Calibration is complete. Remove weight from platform.

Parameter Adjustment

Speed Adjust State

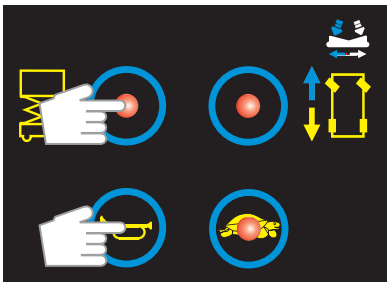
ART_5785C

1. Press and hold HORN and LIFT buttons while pulling the PCU's E-Stop (Out) to enter Speed Adjust State.

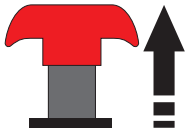

ART_5785D

2. "PS" and current Lift Speed are alternately flashing on the display. Release LIFT and HORN buttons.

Drive High Speed with Platform Stowed

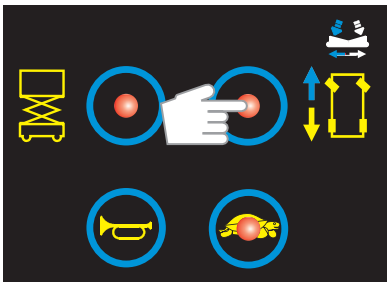
ART_5785E

1. Press DRIVE button. The DRIVE LED indicates this mode is active. Adjust the speed using the RIGHT TURN (Increase) or LEFT TURN (Decrease) button on the top of the Joystick.

ART_5785F

2. The value can be changed from 00 to 100 (displays 9˙9) with the buttons on top of the Joystick.

Drive Low Speed

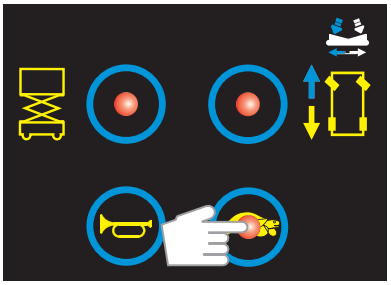
ART_5785G

1. Press DRIVE button. Press and hold the LOW SPEED button to select Drive Low Speed adjustment. Keep it held while adjusting the speed. The display indicates present set value. Adjust using the RIGHT TURN (Increase) or LEFT TURN (Decrease) button on top of the Joystick.

ART_5785F

2. The value can be changed from 00 to 100 (displays 9˙9) with the buttons on top of the Joystick.

Drive Elevated Speed

WARNING

Elevated Drive Speed is an important safety parameter set at the factory. Changing this parameter should only be conducted with express instructions from MEC Product Support Department.

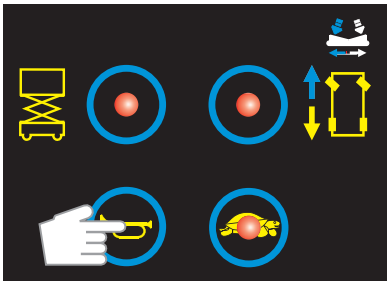

ART_5785H

1. Press DRIVE button. Press and hold the HORN button to select Drive Elevated Speed adjustment. Keep it held while adjusting the speed. The display will indicate the present set value. Adjust the speed using the RIGHT TURN (Increase) or LEFT TURN (decrease) button on top of the Joystick.

ART_5785I

2. The value can be changed from 00 to Max Speed (see table below) with the buttons on top of the Joystick.

Position	Drive Speed
Stowed	3.7 ft/sec (1.11 m/sec)
Raised	1.03 ft/sec (0.31 m/sec)

Lift Speed

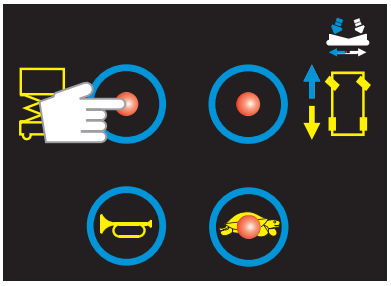

ART_5785J

1. Press LIFT button. The LIFT LED indicates this mode is active. Adjust the speed using the RIGHT TURN (Increase) or LEFT TURN (Decrease) button on top of the Joystick.

ART_5785F

2. The value can be changed from 00 to 100 (displays 9˙9) with the buttons on top of the Joystick.

Steering Speed

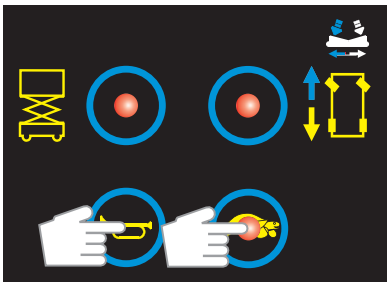

ART_5785K

1. Press DRIVE button. Press and hold the HORN and LOW SPEED buttons to select. Drive Steering Speed adjustment. Hold these buttons while adjusting the speed. Display indicates the present set value. Adjust the speed using the RIGHT TURN (Increase) or LEFT TURN (Decrease) button on top of the Joystick.

ART_5785F

2. The value can be changed from 00 to 100 (displays 9˙9) with the buttons on top of the Joystick.

Machine Options State - Selecting Machine Options

1. Press and hold the LIFT and HORN buttons while pulling the PCU's E-Stop out to select Machine Options adjustment.

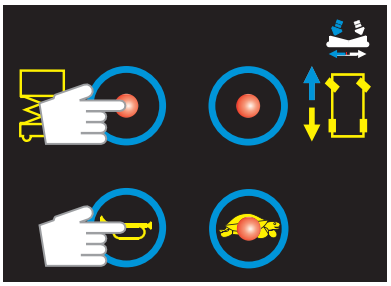

ART_5785Q

2. "PS" and Elevated Speed value will alternatively flash on the display.

ART_5785D

3. Release LIFT and HORN buttons.

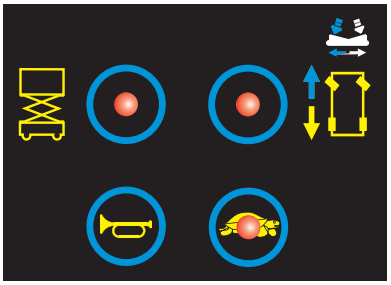

ART_5785L

4. "PS" will change to Lift Speed.

ART_5785F

Getting To The Machine Option Selection Mode

1. Press and hold the LIFT and LOW SPEED buttons for 3 seconds to enter the Machine Option selection mode.

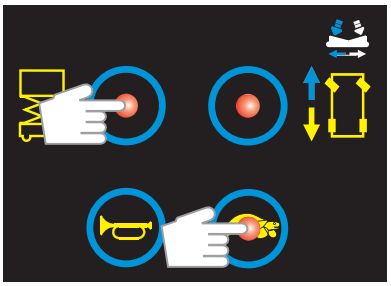

ART_5785M

2. "SC" is displayed when in Machine Option selection mode.

ART_5785N

Entering The Machine Option Selection Mode

1. Momentarily press DRIVE button to edit the right digit. The digit will be flashing.

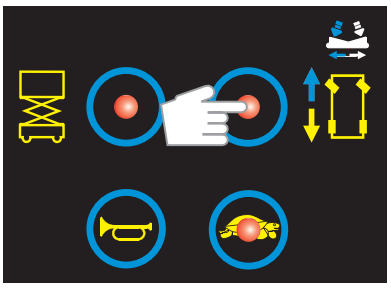

ART_5785E

2. Then press LIFT button to edit the left digit. The Left digit will now be flashing.

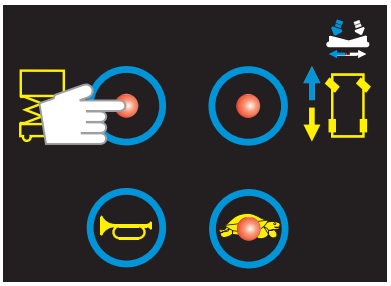

ART_5785J

3. The buttons on the top of the Joystick increase (LEFT TURN button) or decrease (RIGHT TURN button) the flashing digit.

ART_5785O

4. Press the HORN button, the dot will disappear.

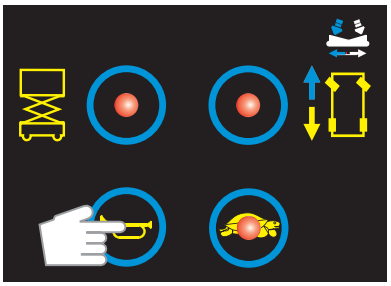

ART_5785H

Save The New Values

1. Press the HORN button for 3 seconds to save changes.
2. Turn OFF power and ON to operate the machine with the new values.

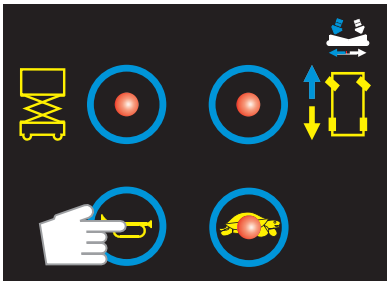

ART_5785P

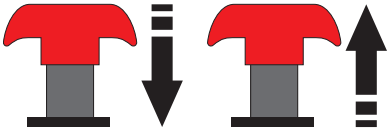

Notes

Parts Introduction

This Parts sections consists of illustrated parts sections and is designed to provide you, the customer, with illustrations and the list of associated parts needed to properly maintain the MEC self-propelled aerial work platform. When used in conjunction with the Service section in this manual and the Operator's Manual (provided separately), this manual will assist you in making necessary adjustments and repairs, and identifying and ordering the correct replacement parts.

All parts represented here are manufactured and supplied in accordance with MEC quality standards.

We recommend that you use genuine MEC parts to ensure proper operation and reliable performance.

To obtain maximum benefits from your MEC Aerial Work Platforms, always follow the proper operating and maintenance procedures. Only trained authorized personnel should be allowed to operate or service this machine. Service personnel should read and study the Operator's, and the Service and Parts Manuals in order to gain a thorough understanding of the unit prior to making any repairs.

Cover Installation

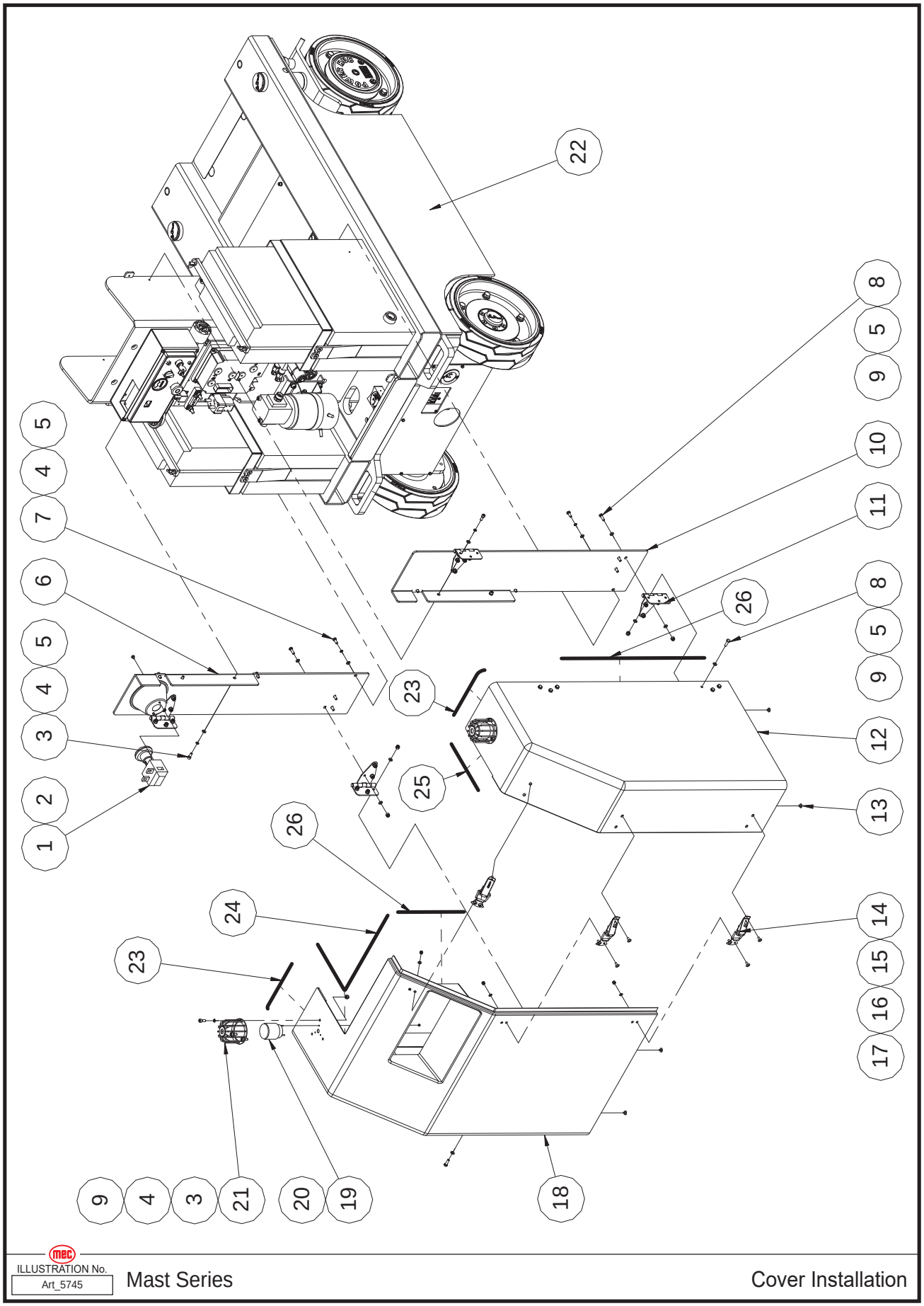

Item	Part Number	Description	Qty.
1	42071	Power Switch	1
2	53383	Screw PHMS M05-0.80 × 6	2
3	53138	Screw SHCS M06-1.00 × 16	10
4	53046	WSHR M06 Spring Washer	16
5	50000	WSHR M06 Standard Flat Washer	58
6	44291	Left Plate	1
7	50445	Screw HHCS M06-1.00 × 16	6
8	50028	Screw HHCS M06-1.00 × 20	24
9	50047	Nut NNYL M06-1.00	30
10	44292	Right Plate	1
11	44293	Hinge	4
12	44294	Right Cover	1
13	44295	Nylon Block	5
14	44296	Lock Catch	3
15	53224	Screw THMS M05-0.80 × 12	12
16	53038	WSHR M05 Standard Flat Washer	12
17	50524	Nut NNYL M05 × 0.80	12
18	44297	Left Cover	1
19	44298	Beacon	2
20	53092	Nut NNYL M03 × 0.50	6
21	44299	Beacon Cover	2
22	47185	Chassis Assembly (MME20)	1
	47186	Chassis Assembly (MME25)	1
23	44522	Edge Seal Top Corner Right Hand	2
24	44525	Edge Seal Inside Edge	1
25	44529	Edge Seal Top Corner Left Hand	1
26	44524	Edge Seal Between Hinges	2

Steer Linkage and Wheels Assembly

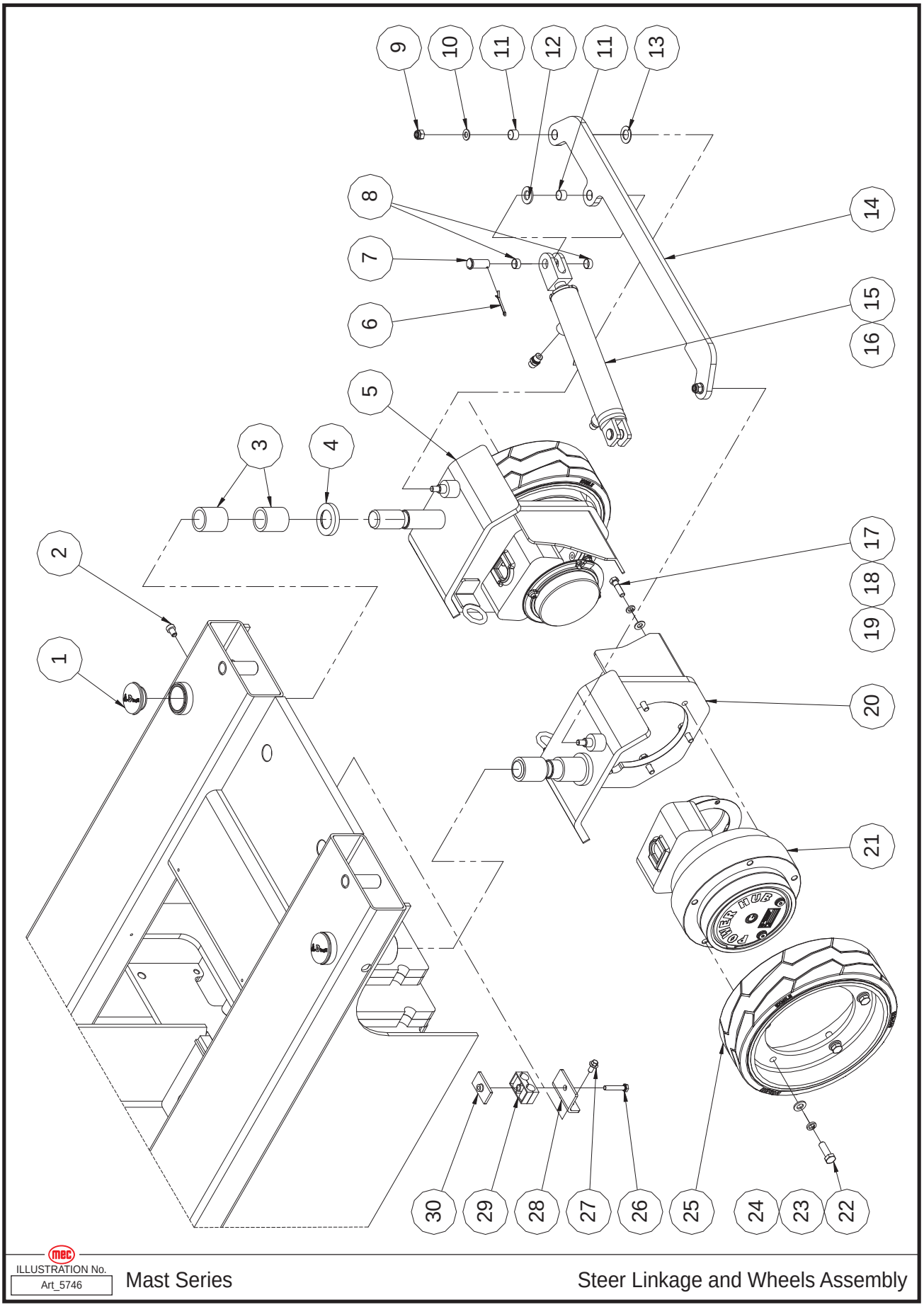

Item	Part Number	Description	Qty.
1	41596	Cover	2
2	41794	Screw	2
3	41595	Bearing	4
4	41792	Washer	2
5	44300	Steer Yoke Weldment	1
6	43563	Cotter Pin	2
7	41321	Pin	2
8	41225	Bearing	4
9	50049	Nut NNYL M10 × 1.50	2
10	50002	WSHR M10 Standard Flat Washer	2
11	41210	Bearing	4
12	43564	Washer	2
13	41222	Bearing	2
14	44553	Tie Rod (MME20)	1
	44554	Tie Rod (MME25)	1
15	41593	Steer Cylinder Assembly	1
--	41594	Seal Kit	1
16	43076	Straight Fitting	2
17	53376	Screw HHCS 3/8-16 × 1 3/8	12
18	53316	WSHR 3/8 Spring Washer	12
19	53317	WSHR 3/8 Standard Flat Narrow Washer	12
20	44301	Steer Yoke Weldment	1
21	43558	Drive Motor Assembly	2
--	43559	Motor	1
--	43560	Reducer	1
--	43561	Brake	1
22	50236	Screw HHCS M12-1.50 × 35	10
23	53148	WSHR M12 Spring Washer	10
24	50003	WSHR M12 Standard Flat Washer	10
25	44302	Wheel	2
26	50057	Screw HHCS M08-1.25 × 45	1
27	53194	Screw HHCS M08-1.25 × 16 Serrated Flange	2
28	44343	Hose Clamp Support	1
29	43520	Hose Clamp	1
30	44303	Base Plate	1

Rear Wheel Assembly

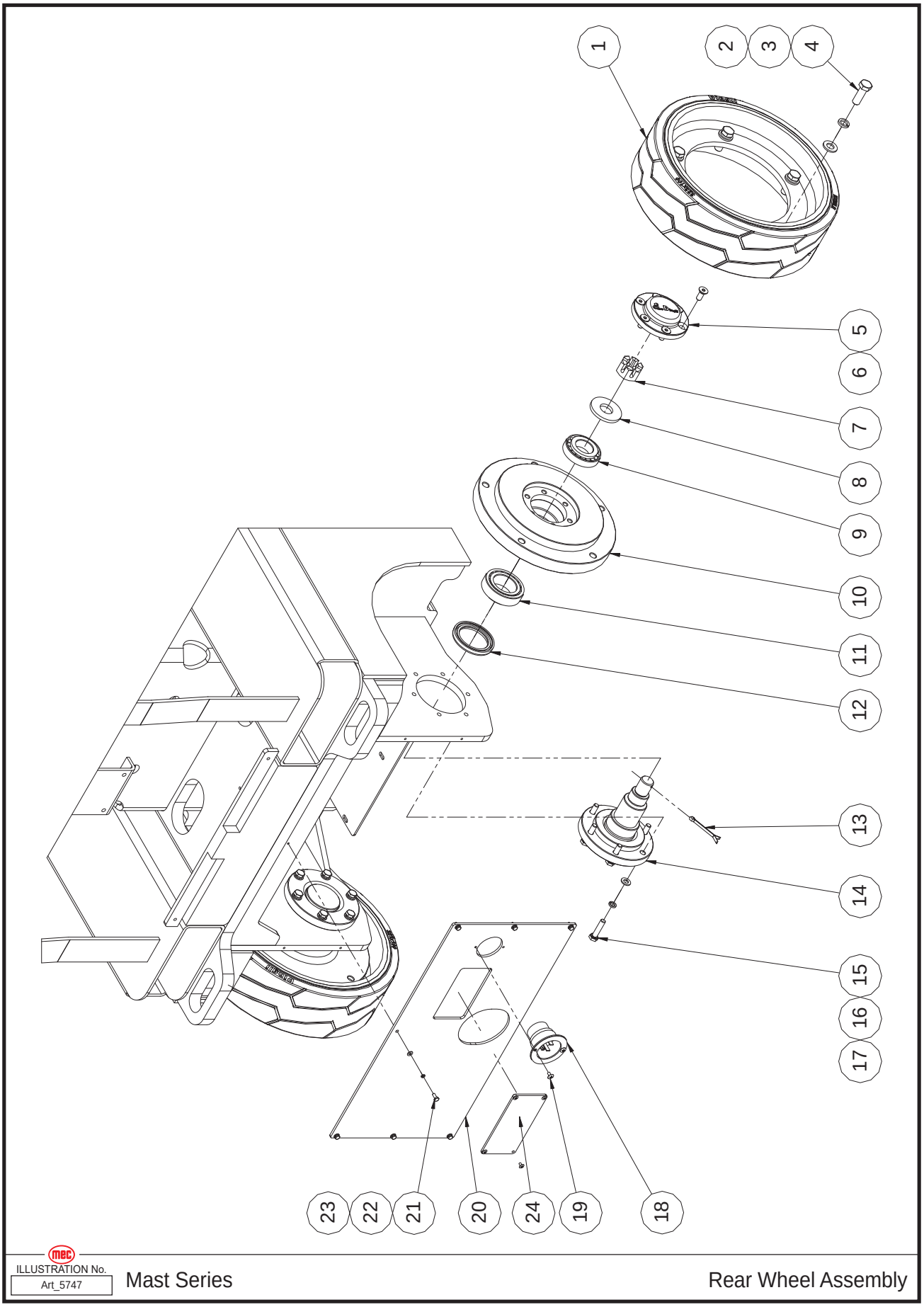

Item	Part Number	Description	Qty.
1	44302	Wheel	2
2	50003	WSHR M12 Standard Flat Washer	10
3	53148	WSHR M12 Spring Washer	10
4	50236	Screw HHCS M12-1.50 × 35	10
5	41328	Cap	2
6	53282	Screw CSCS M08-1.25 × 20	12
7	53262	Castle Nut M22 × 1.50	2
8	41304	Washer	2
9	41024	Bearing	2
10	41025	Bearing Seat	2
11	41029	Bearing	2
12	43588	Seal	2
13	43585	Cotter Pin	2
14	44304	Spindle	2
15	50282	Screw HHCS M08-1.25 × 35	12
16	53055	WSHR M08 Spring Washer	12
17	50001	WSHR M08 Standard Flat Washer	12
18	41575	Plug	1
19	53263	Screw THMS M04-0.70 × 8	2
20	44556	Cover (MME20)	1
	44557	Cover (MME25)	1
21	53377	Screw HHCS M04-0.70 × 10	7
22	53062	WSHR M04 Spring Washer	7
23	50284	WSHR M04 Standard Flat Washer	7
24	44857	Battery Charger Window Cover	1
--	53263	Screw THMS M04-0.70 × 8	4

Pothole Protection Assembly

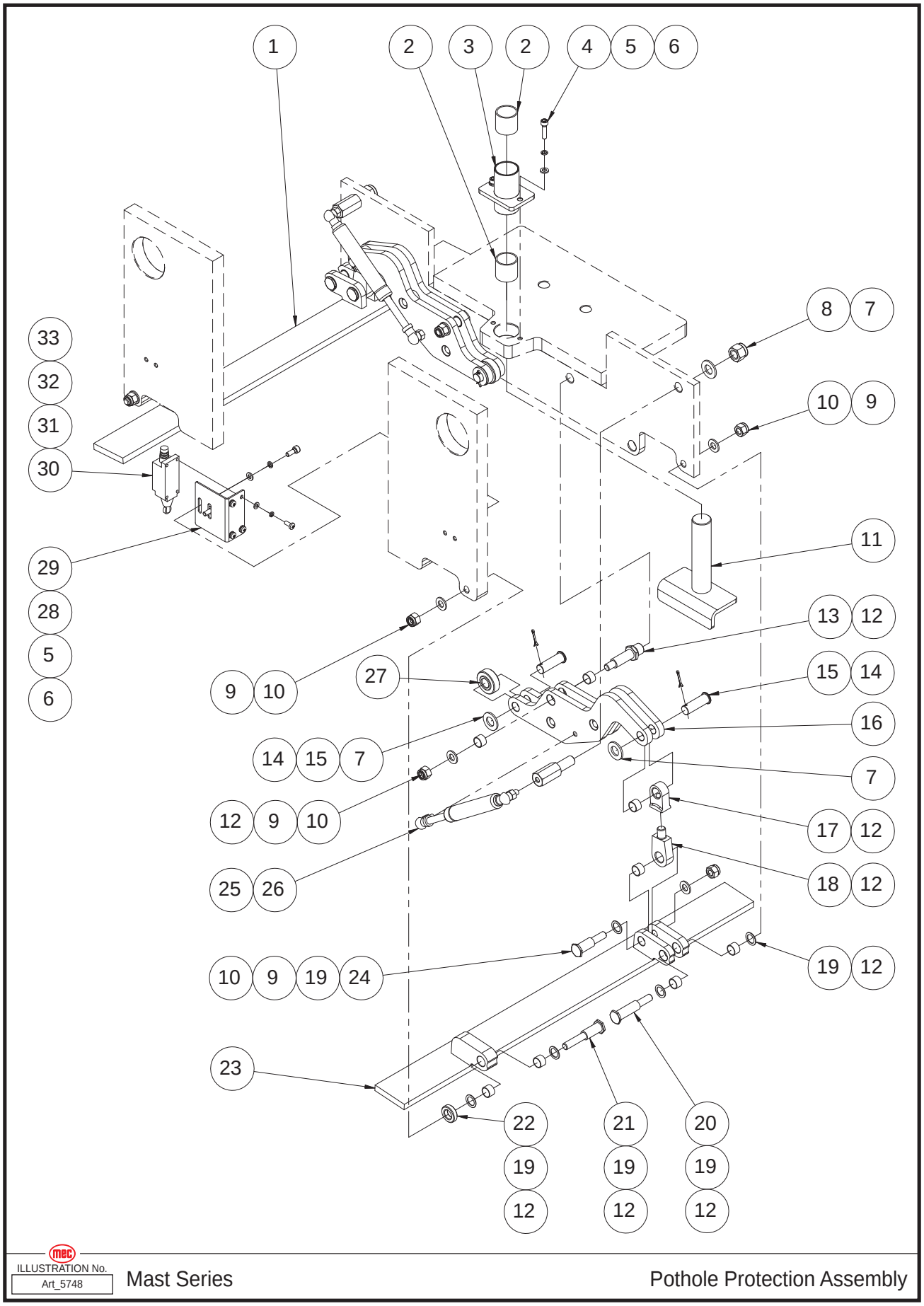

Item	Part Number	Description	Qty.
1	44305	Pothole Guard Weldment	1
2	44306	Bearing	2
3	44307	Pothole Plunger Guide	1
4	53123	Screw SHCS M06-1.00 × 25	2
5	53046	WSHR M06 Spring Washer	6
6	50000	WSHR M06 Standard Flat Washer	6
7	53049	WSHR M14 Standard Flat Washer	6
8	50303	Nut NNYL M14 × 2.00	2
9	50002	WSHR M10 Standard Flat Washer	8
10	50049	Nut NNYL M10 × 1.50	8
11	44308	Pothole Hole Plunger	1
12	44309	Bearing	16
13	44310	Pin	2
14	44311	Cotter Pin	4
15	44312	Pin	4
16	44313	Linkage Weldment	2
17	44314	Pothole Link Nut	2
18	44315	Pothole Link	2
19	44316	Washer	10
20	44317	Pin	2
21	44318	Pin	2
22	44319	Washer	2
23	44320	Pothole Guard Weldment	1
24	44321	Pin	2
25	44322	Gas Shock Strut	2
26	44323	Gas Shock	2
27	44324	Roller	2
28	53138	Screw SHCS M06-1.00 × 16	4
29	44325	Switch Bracket	2
30	41197	Limit Switch	2
31	53378	Screw PHMS M05-0.80 × 12	8
32	53043	WSHR M05 Spring Washer	8
33	53038	WSHR M05 Standard Flat Washer	8

Electrical Component Installation

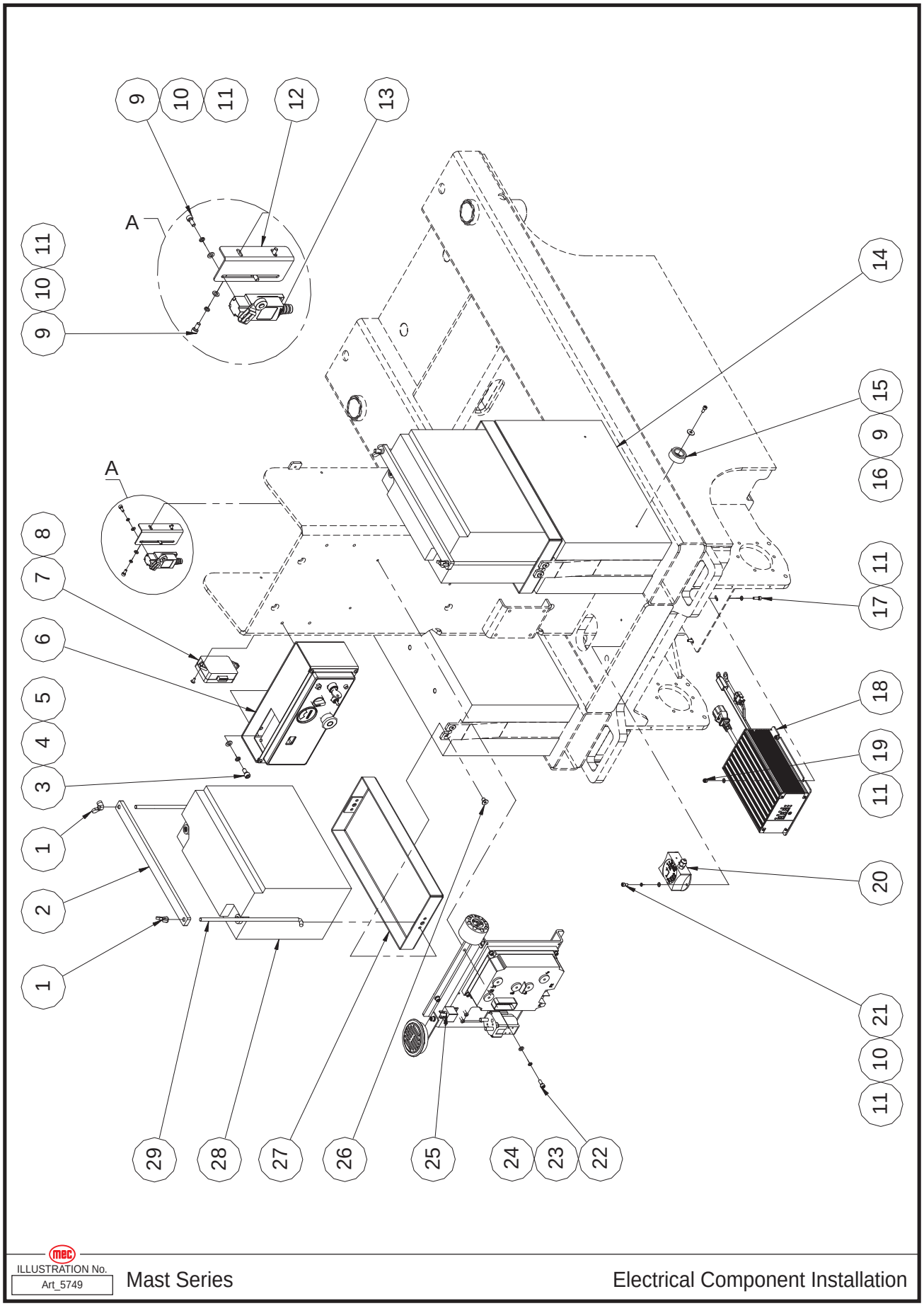

Item	Part Number	Description	Qty.
1	53206	Wing Nut M08-1.25	4
2	44326	Battery Keeper Bar	2
3	53379	Screw SHCS M08-1.25 × 16	6
4	53055	WSHR M08 Spring Washer	6
5	50001	WSHR M08 Standard Flat Washer	6
6	REF	Ground Control Box Assembly (Refer To page 63)	1
7	41094	Brake Module	1
8	53348	Screw THMS M04-0.70 × 10	2
9	53116	Screw SHCS M05-0.80 × 12	6
10	53043	WSHR M05 Spring Washer	10
11	53038	WSHR M05 Standard Flat Washer	22
12	44327	Switch Bracket	1
13	42074	Limit Switch	1
14	44328	Counterweight	2
15	44329	Bumper	2
16	50068	WSHR M06 Flat Fender Washer	2
17	50359	Screw SHCS M05-0.80 × 16	4
18	42904	Charger	1
19	50524	Nut NNYL M05 × 0.80	8
20	44572	Tilt Sensor	1
21	53173	Screw SHCS M05-0.80 × 10	2
22	53138	Screw SHCS M06-1.00 × 16	3
23	53046	WSHR M06 Spring Washer	3
24	50000	WSHR M06 Standard Flat Washer	3
25	REF	Motor Controller Assembly (Refer To page 65)	1
26	53382	Screw CSCS M08-1.25 × 12	8
27	44330	Battery Box Weldment	2
28	44331	Battery Grout 31 AGM - 115AH Threaded	2
29	44332	Threaded Rod	4

REF - Reference

Ground Control Box Assembly

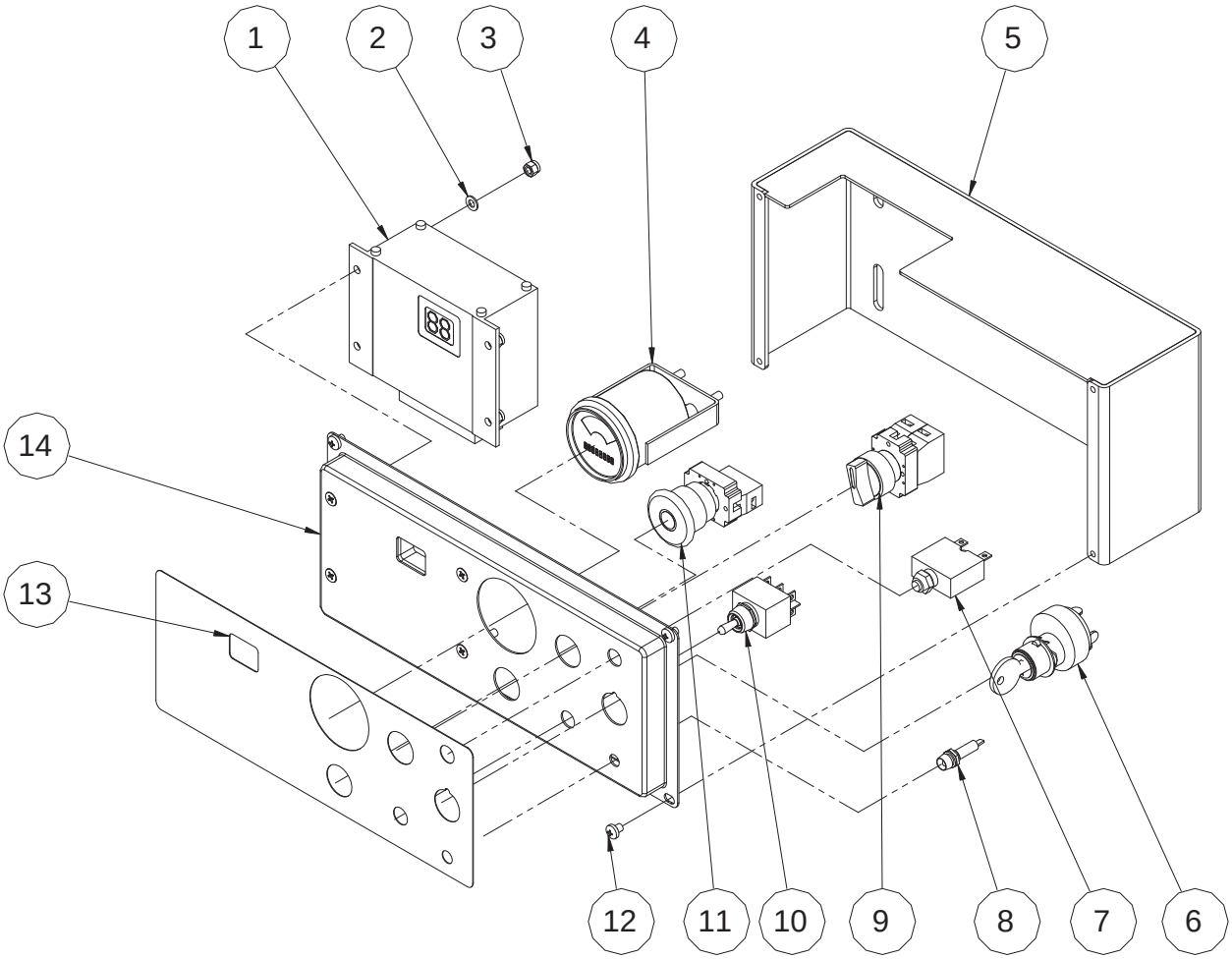

ILLUSTRATION No. Art_5750 Mast Series Ground Control Box Assembly

Item	Part Number	Description	Qty.
1	44333	Controller	1
2	53038	WSHR M05 Standard Flat Washer	4
3	50524	Nut NNYL M05 × 0.80	4
4	41070	Hour Meter	1
5	44334	Ground Control Box Weldment	1
6	41418	Key Switch	1
--	91574	Key	1
7	41420	Circuit Breaker	1
8	41421	Overload Indicator	1
9	43992	Select Switch	1
--	43993	Select Switch Head	1
--	43994	Base With 1 NO Contact	1
--	43096	NC Contact	1
10	41419	Toggle Switch	1
11	41422	Emergency Stop Switch	1
--	43098	Red Mushroom Head	1
--	43097	Base With 1 NC Contact	1
12	53383	Screw PHMS M05-0.80 × 6	4
13	44338	Decal, Ground Control Panel	1
14	44335	Ground Control Panel Weldment	1

Motor Controller Assembly

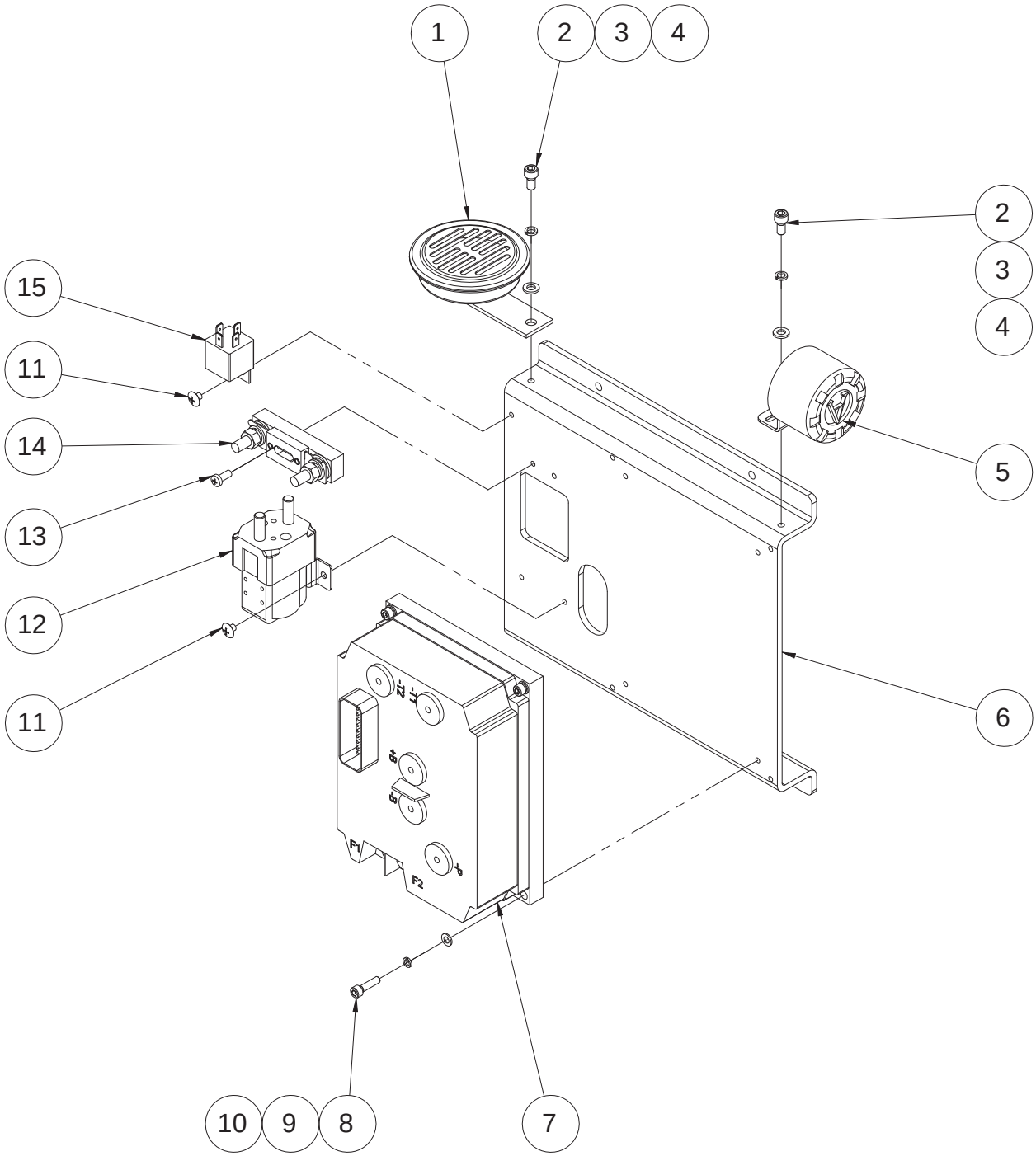

ILLUSTRATION No. Art_5751 Mast Series Motor Controller Assembly

Item	Part Number	Description	Qty.
1	41075	Horn	1
2	53380	Screw SHCS M06-1.00 × 12	2
3	53046	WSHR M06 Spring Washer	2
4	50000	WSHR M06 Standard Flat Washer	2
5	41074	Alarm	1
6	44336	Mounting Plate	1
7	41093	Motor Controller	1
8	53150	Screw SHCS M05-0.80 × 20	4
9	53043	WSHR M05 Spring Washer	4
10	53038	WSHR M05 Standard Flat Washer	4
11	53266	Screw THMS M05-0.80 × 6	3
12	41331	DC Contactor	1
13	53384	Screw PHMS M05-0.80 × 12	2
14	42432	200A Fuse Assembly	1
--	44014	200A Fuse	1
--	41092	Fuse Seat	1
15	41334	Relay 24V	1

Hydraulic Component Installation

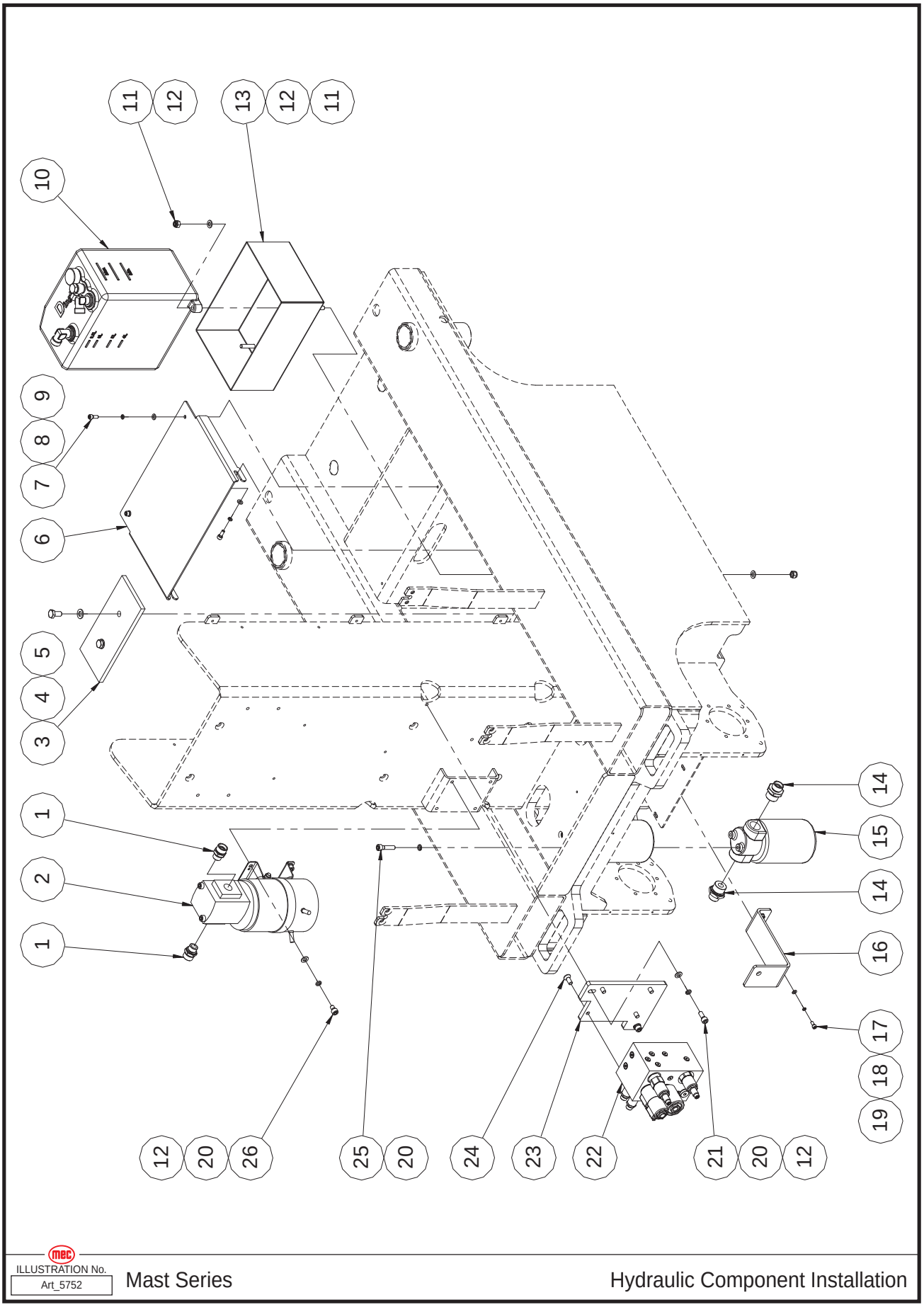

Item	Part Number	Description	Qty.
1	43582	Straight Fitting	2
2	41608	Pump Motor Assembly	1
--	41609	Pump	1
--	41820	Motor	1
3	44337	Bumper	1
4	50215	Screw HHCS M10-1.50 × 20	2
5	50002	WSHR M10 Standard Flat Washer	2
6	44339	Cover	1
7	53138	Screw SHCS M06-1.00 × 16	4
8	53046	WSHR M06 Spring Washer	4
9	50000	WSHR M06 Standard Flat Washer	4
10	REF	Hydraulic Tank Assembly (Refer To page 69)	1
11	50048	Nut NNYL M08 × 1.25	4
12	50001	WSHR M08 Standard Flat Washer	10
13	44340	Hydraulic Tank Box	1
14	43576	Straight Fitting	2
15	41077	Filter Assembly	1
--	41078	Filter Element	1
16	44341	Bracket	1
17	53116	Screw SHCS M05-0.80 × 12	2
18	53043	WSHR M05 Spring Washer	2
19	53038	WSHR M05 Standard Flat Washer	2
20	53055	WSHR M08 Spring Washer	8
21	53177	Screw SHCS M08-1.25 × 20	2
22	44551	Function Manifold Assembly (Refer To page 107)	1
23	44342	Mounting Plate	1
24	53282	Screw CSCS M08-1.25 × 20	4
25	53386	Screw SHCS M08-1.25 × 35	2
26	53387	Screw SHCS M08-1.25 × 12	4

REF - Reference

Hydraulic Tank Assembly

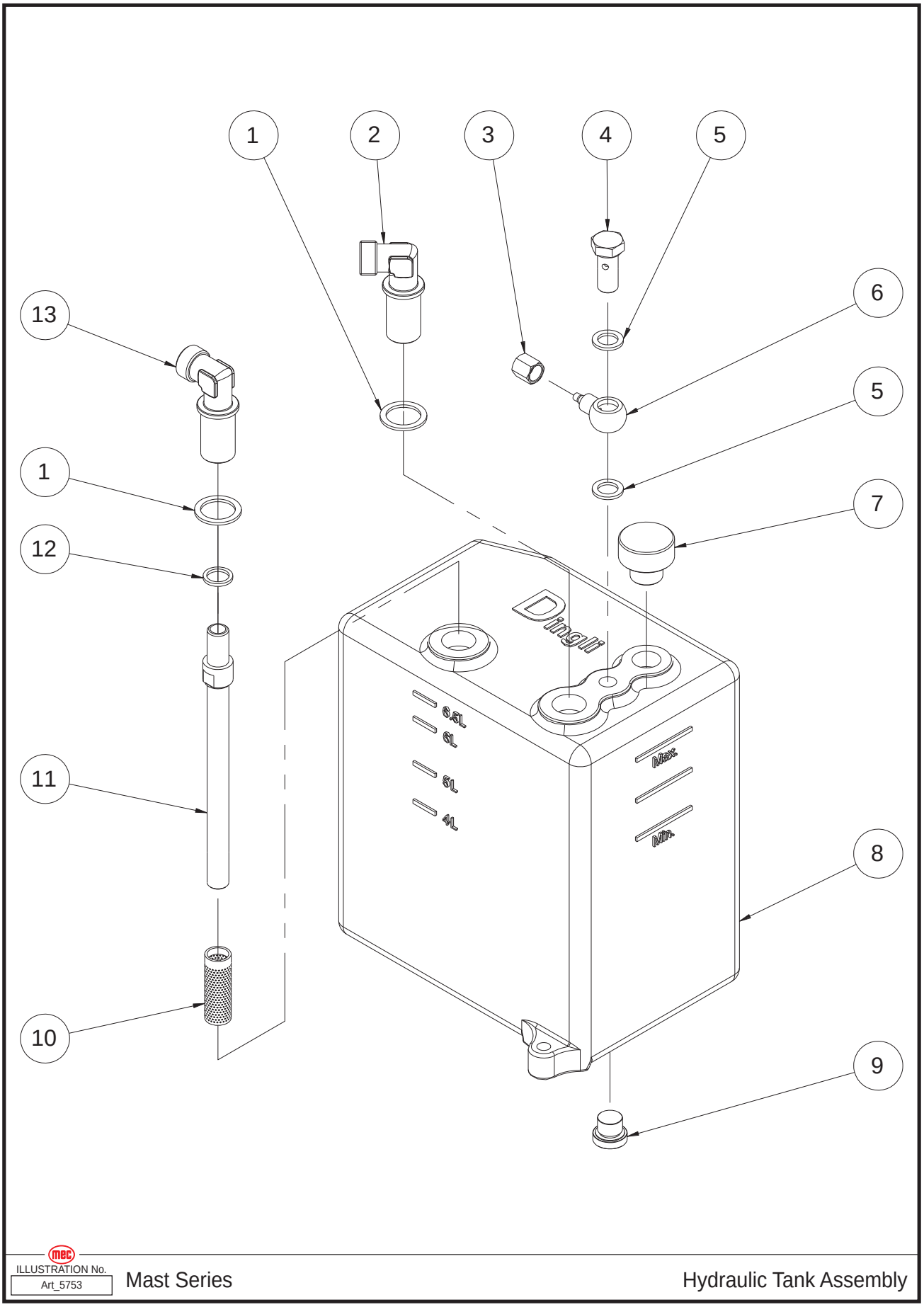

Item	Part Number	Description	Qty.
1	41412	Washer	2
2	41085	Fitting	1
3	41413	Nut	1
4	41166	Fitting	1
5	44002	Washer	2
6	41167	Fitting	1
7	41082	Breather/Dip Stick	1
8	44344	Tank	1
9	41087	Plug	1
10	41824	Filter	1
11	44568	Suction Pipe	1
12	44567	Seal Washer	1
13	41826	Fitting	1

Mast and Chassis Installation

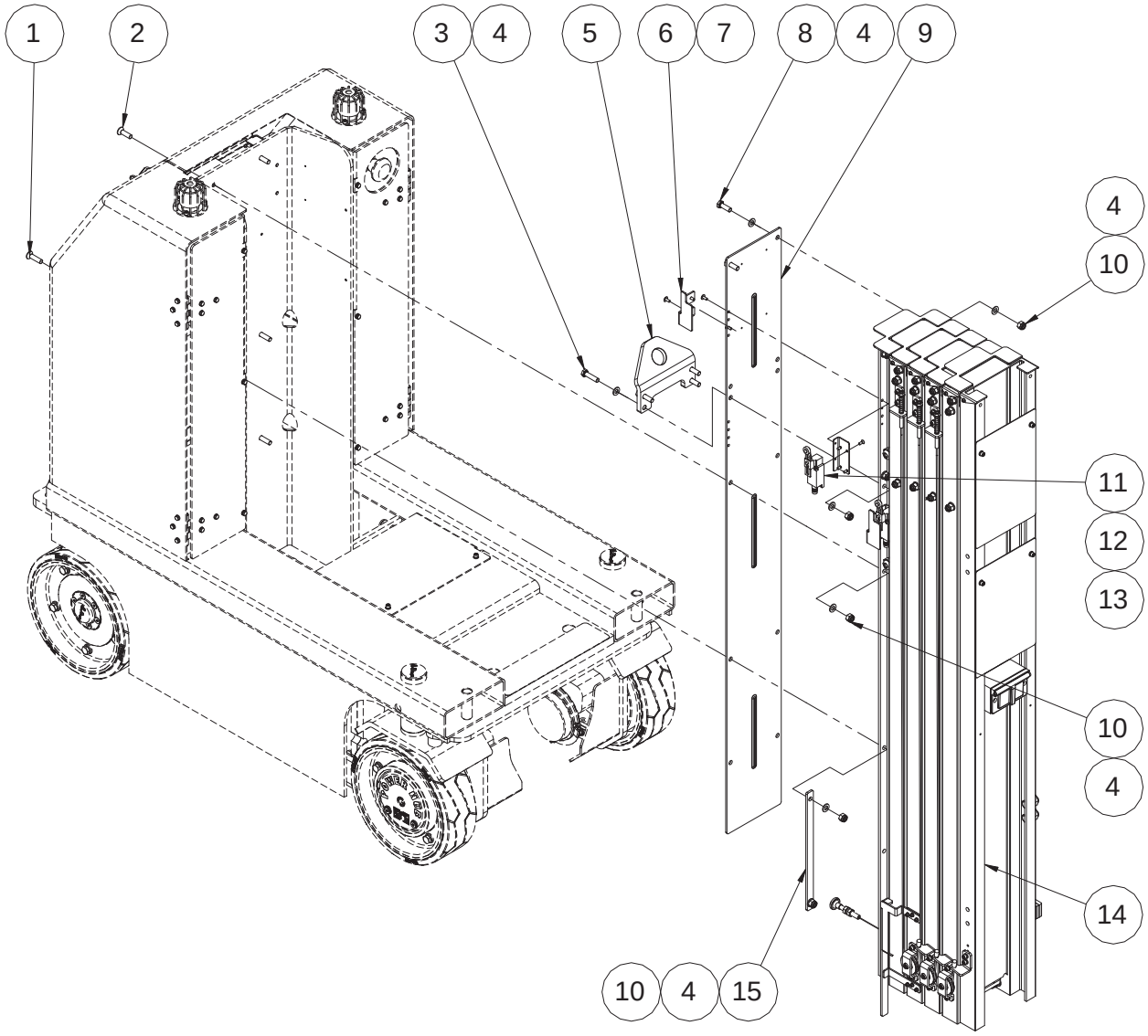

ILLUSTRATION No. Art_5754 Mast Series Mast and Chassis Installation

Item	Part Number	Description	Qty.
1	53230	Screw CSCS M10-1.50 × 40	4
2	53388	Screw CSCS M10-1.50 × 35	2
3	50237	Screw HHCS M10-1.50 × 40	4
4	50002	WSHR M10 Standard Flat Washer	18
5	44345	Lifting Eye Plate	1
6	44346	Cover	2
7	53224	Screw THMS M05-0.80 × 12	8
8	50034	Screw HHCS M10-1.50 × 30	2
9	44347	Mast Backplate	1
10	50049	Nut NNYL M10 × 1.50	12
11	42402	Limit Switch	2
12	44348	Switch Bracket	2
13	53279	Screw CSCS M05-0.80 × 12	8
14	REF	Mast Assembly (MME20) (Refer To page 73)	1
	REF	Mast Assembly (MME25) (Refer To page 75)	1
15	44349	Splint	2

REF - Reference

Mast Assembly (MME20)

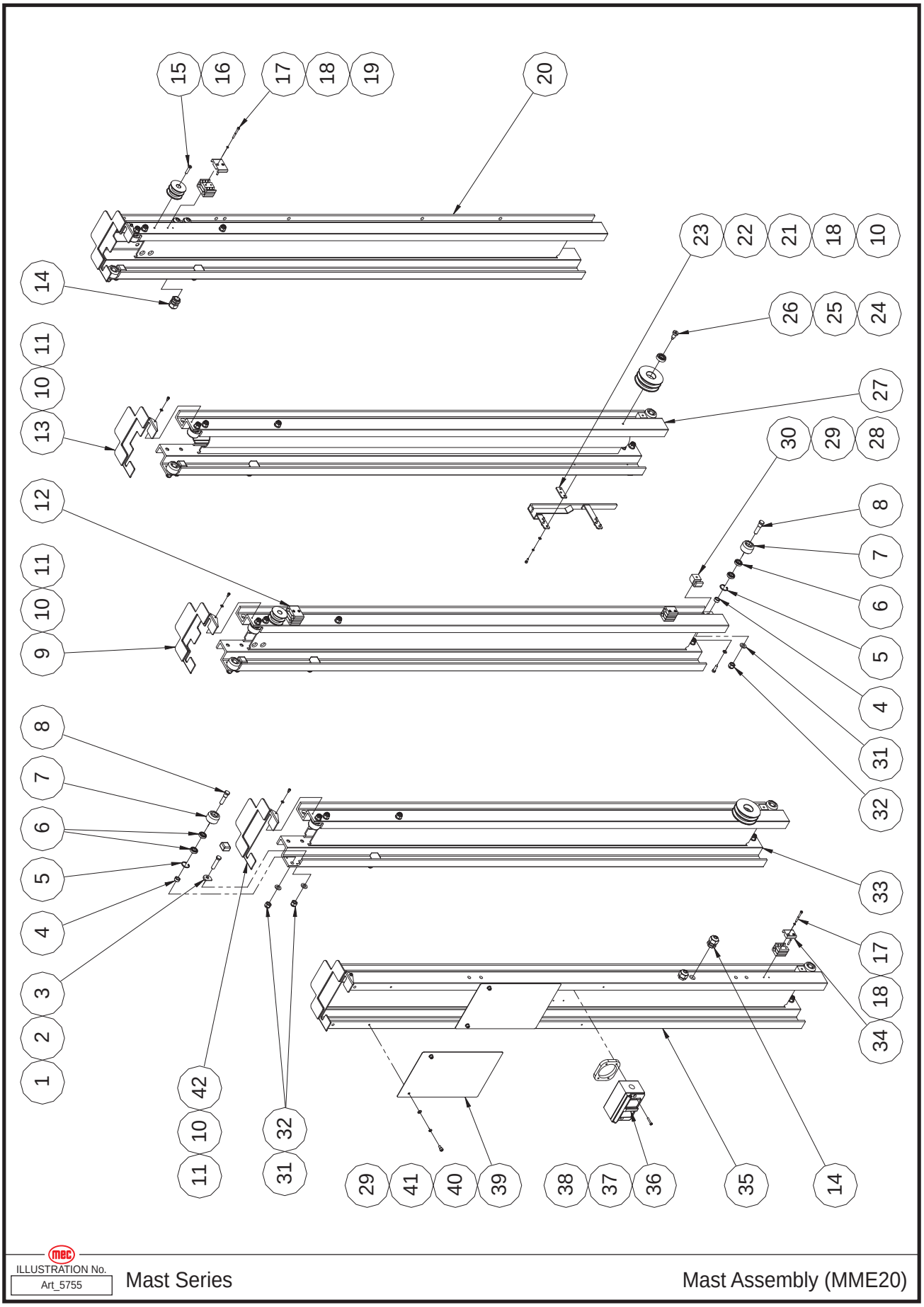

Item	Part Number	Description	Qty.
1	44350	Slide Block	16
2	44351	Bolt	16
3	44352	Slide Block Nut	16
4	44353	Spacer	16
5	44354	Circlips	16
6	44355	Bearing	32
7	44356	Roller	16
8	44357	Bolt	16
9	44358	Mast Cover	2
10	50284	WSHR M04 Standard Flat Washer	16
11	53389	Screw SHCS M04-0.70 × 8	10
12	44359	Mast 3	1
13	44360	Mast Cover	1
14	41273	Water-Proof Joint	6
15	50560	Screw CSCS M06-1.00 × 30	2
16	44361	Pulley	2
17	50469	Screw SHCS M04-0.70 × 35	8
18	53062	WSHR M04 Spring Washer	14
19	44362	Wire Clip	8
20	44363	Mast 1	1
21	50423	Screw SHCS M04-0.70 × 12	6
22	44364	Signal Plate	1
23	44365	Bumper	2
24	44366	Pulley	2
25	44367	Bearing	2
26	44368	Bolt	2
27	44369	Mast 2	1
28	53390	Slotted PHTS M3 × 25	8
29	50000	WSHR M06 Standard Flat Washer	12
30	44370	Slide Block	8
31	50002	WSHR M10 Standard Flat Washer	32
32	50049	Nut NNYL M10 × 1.50	32
33	44371	Mast 4	1
34	44372	Wire Clip	8
35	44373	Mast 5	1
36	91597	Electrical Outlet	1
37	44374	Pad	1
38	53405	Screw PHMS M04-0.70 × 25	2
39	44375	Signal Plate	2
40	53380	Screw SHCS M06-1.00 × 12	4
41	53046	WSHR M06 Spring Washer	4
42	44376	Mast Cover	2

Mast Assembly (MME25)

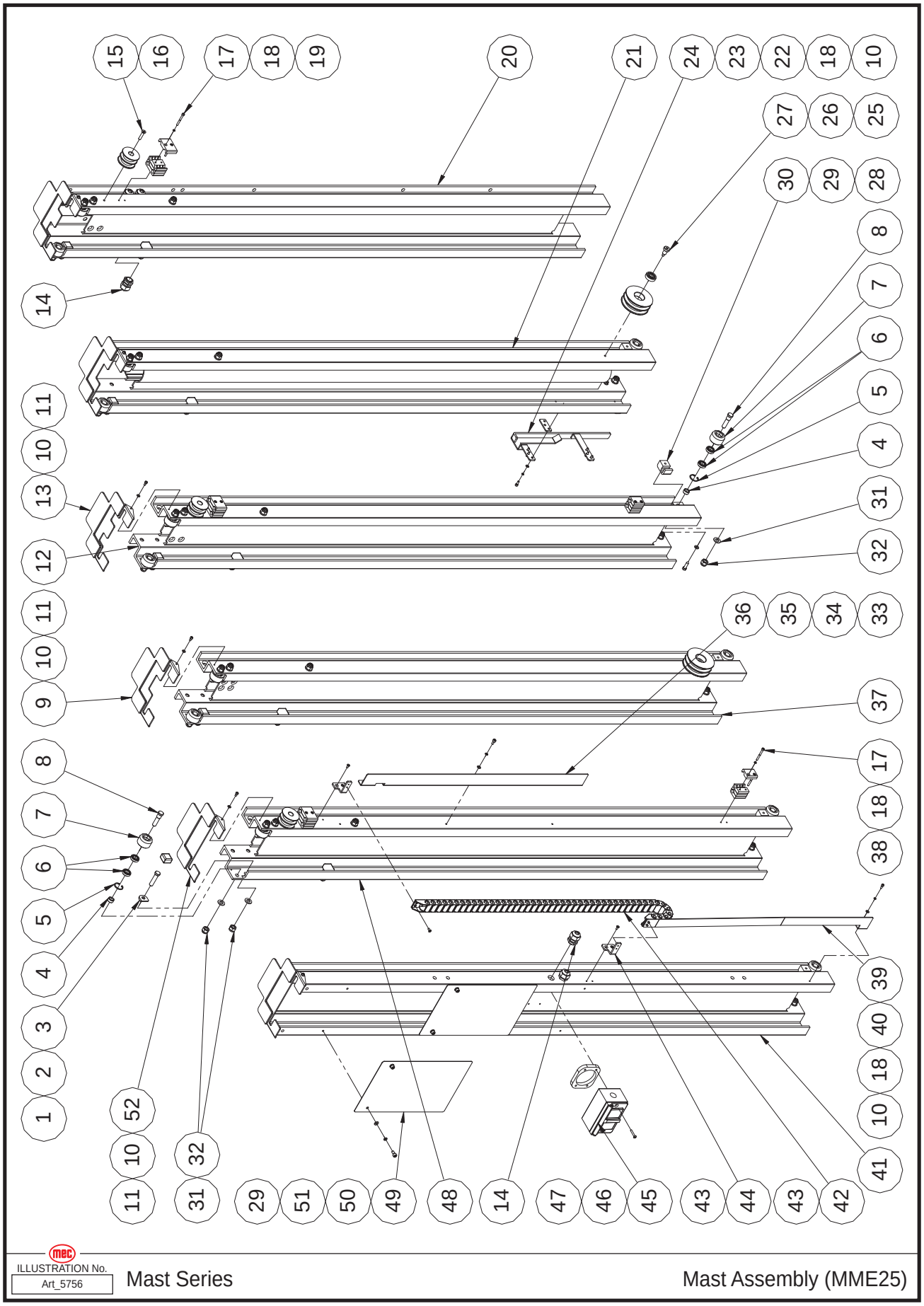

Item	Part Number	Description	Qty.
1	44350	Slide Block	20
2	44351	Bolt	20
3	44352	Slide Block Nut	20
4	44353	Spacer	20
5	44354	Circlips	20
6	44355	Bearing	40
7	44356	Roller	20
8	44357	Bolt	20
9	44360	Mast Cover	2
10	50284	WSHR M04 Standard Flat Washer	19
11	53389	Screw SHCS M04-0.70 × 8	12
12	44377	Mast Set 3	1
13	44358	Mast Cover	2
14	41273	Water-Proof Joint	6
15	50560	Screw CSCS M06-1.00 × 30	3
16	44361	Pulley	3
17	50469	Screw SHCS M04-0.70 × 35	10
18	53062	WSHR M04 Spring Washer	17
19	44362	Wire Clip	12
20	44378	Mast Set 1	1
21	44379	Mast Set 2	1
22	50423	Screw SHCS M04-0.70 × 12	6
23	44365	Bumper	2
24	44364	Signal Plate	1
25	44366	Pulley	2
26	44367	Bearing	2
27	44368	Bolt	2
28	53390	Slotted PHTS M3 × 25	10
29	50000	WSHR M06 Standard Flat Washer	14
30	44370	Slide Block	10
31	50002	WSHR M10 Standard Flat Washer	40
32	50049	Nut NNYL M10 × 1.50	40
33	53038	WSHR M05 Standard Flat Washer	3
34	53043	WSHR M05 Spring Washer	3
35	53173	Screw SHCS M05-0.80 × 10	3
36	44380	Block Plate	1
37	44381	Mast 5	1
38	44372	Wire Clip	8
39	44382	Plate	1
40	50483	Screw SHCS M04-0.70 × 10	1
41	44383	Mast 6	1
42	44384	Towline	1
43	53111	Screw CSCS M04-0.70 × 10	8
44	44385	Seat	2
45	91597	Electrical Outlet	1

46	44374	Pad	1
47	53405	Screw PHMS M04-0.70 × 25	2
48	44386	Mast 5	1
49	44375	Signal Plate	2
50	53380	Screw SHCS M06-1.00 × 12	4
51	53046	WSHR M06 Spring Washer	4
52	44376	Mast Cover	2

THIS PAGE HAS BEEN INTENTIONALLY LEFT BLANK

Lifting Chain Assembly (MME20)

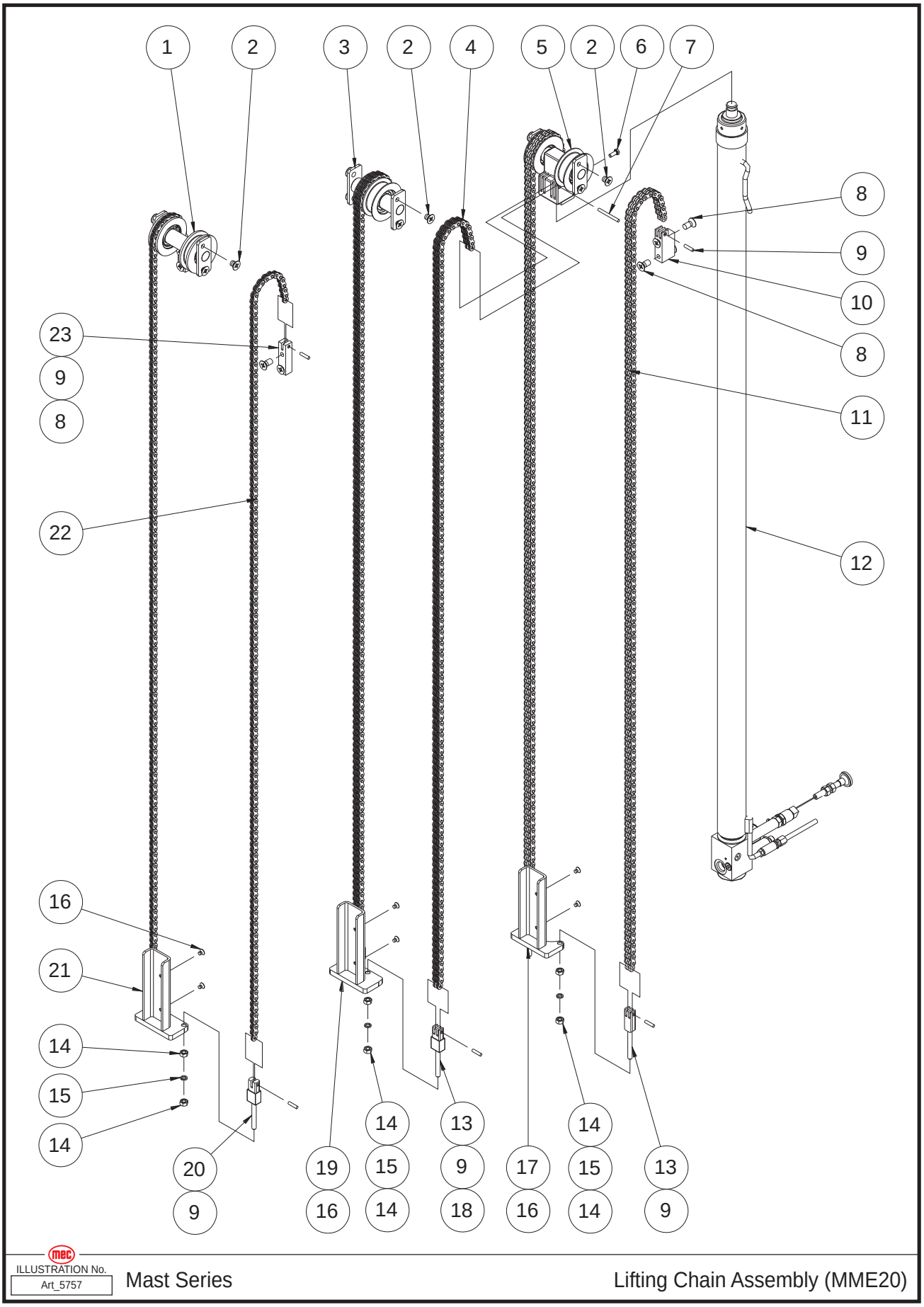

Item	Part Number	Description	Qty.
1	REF	Pulley Assembly, 5-7 Mast (Refer To page 83)	1
2	53391	Screw CSCS M10-1.50 × 12	12
3	REF	Pulley Assembly, 2-4 Mast (Refer To page 85)	1
4	44387	Chain	2
5	REF	Pulley Assembly, 1-3 Mast (Refer To page 87)	2
6	50445	Screw HHCS M06-1.00 × 16	1
7	44388	Pin	1
8	53392	Screw CSCS M10-1.50 × 20	12
9	44389	Pin	10
10	44390	Chain Terminal	2
11	44391	Chain	2
12	REF	Lift Cylinder Assembly (Refer To page 105)	1
13	44392	Chain Terminal	4
14	53014	Nut NHEX M08-1.25	12
15	53055	WSHR M08 Spring Washer	6
16	53381	Screw CSCS M06-1.00 × 8	6
17	44393	Chain Seat	1
18	44569	Sheath	4
19	44394	Chain Seat	1
20	44395	Chain Terminal	2
21	44396	Chain Seat	1
22	44397	Chain	2
23	44398	Chain Terminal	2

REF - Reference

Lifting Chain Assembly (MME25)

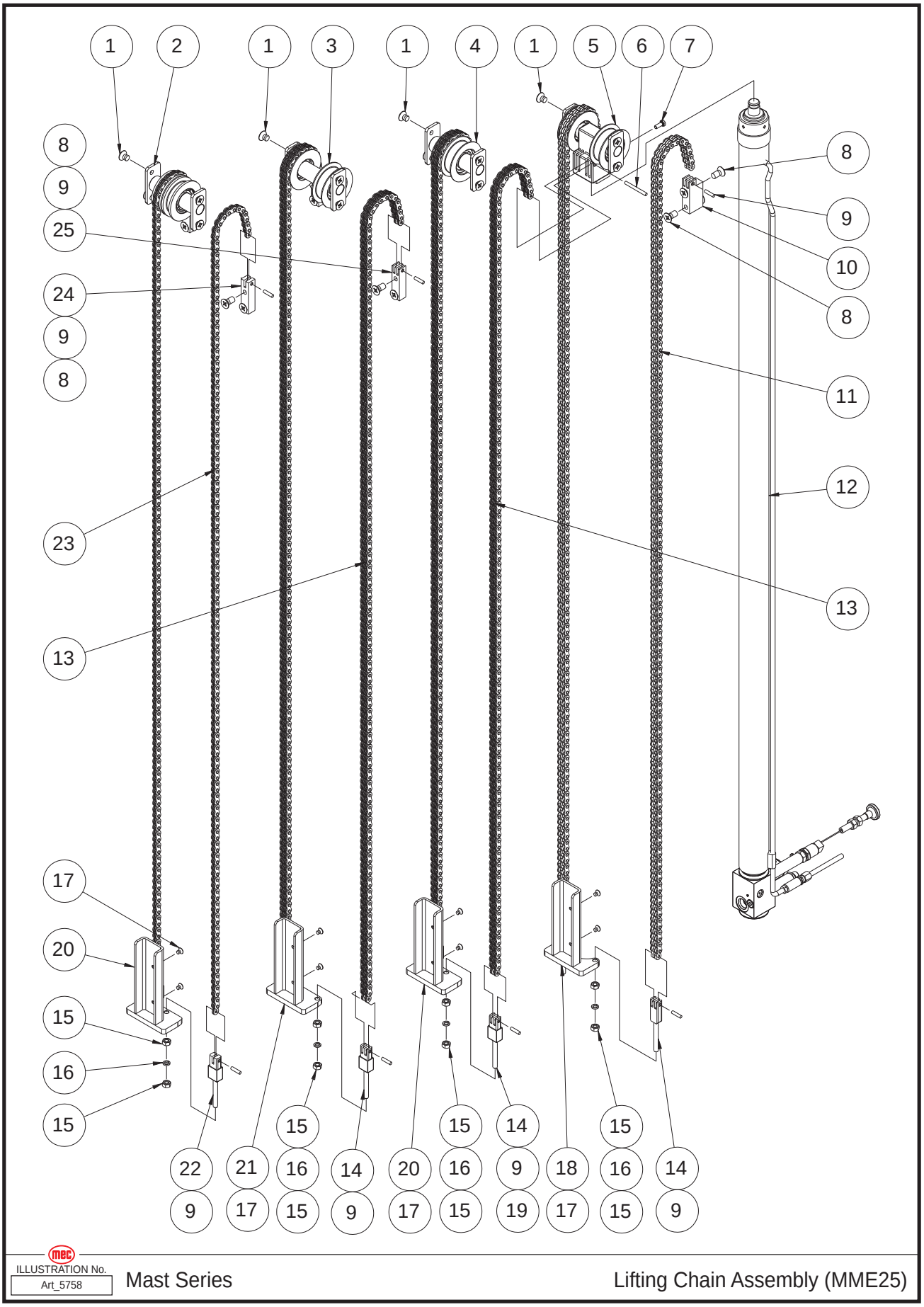

Item	Part Number	Description	Qty.
1	53391	Screw CSCS M10-1.50 × 12	16
2	REF	Pulley Assembly, 4-6 Mast (Refer To page 89)	1
3	REF	Pulley Assembly, 3-5 Mast (Refer To page 91)	1
4	REF	Pulley Assembly, 2-4 Mast (Refer To page 85)	1
5	REF	Pulley Assembly, 1-3 Mast (Refer To page 87)	2
6	44388	Pin	1
7	50445	Screw HHCS M06-1.00 × 16	1
8	53392	Screw CSCS M10-1.50 × 20	16
9	44389	Pin	14
10	44390	Chain Terminal	2
11	44391	Chain	2
12	REF	Lift Cylinder Assembly (Refer To page 105)	1
13	44387	Chain	4
14	44392	Chain Terminal	6
15	53014	Nut NHEX M08-1.25	16
16	53055	WSHR M08 Spring Washer	8
17	53381	Screw CSCS M06-1.00 × 8	8
18	44393	Chain Seat	1
19	44569	Sheath	6
20	44394	Chain Seat	2
21	44396	Chain Seat	1
22	44395	Chain Terminal	2
23	44397	Chain	2
24	44398	Chain Terminal	2
25	44399	Chain Terminal	2

REF - Reference

Pulley Assembly, 5-7 Mast (MME20)

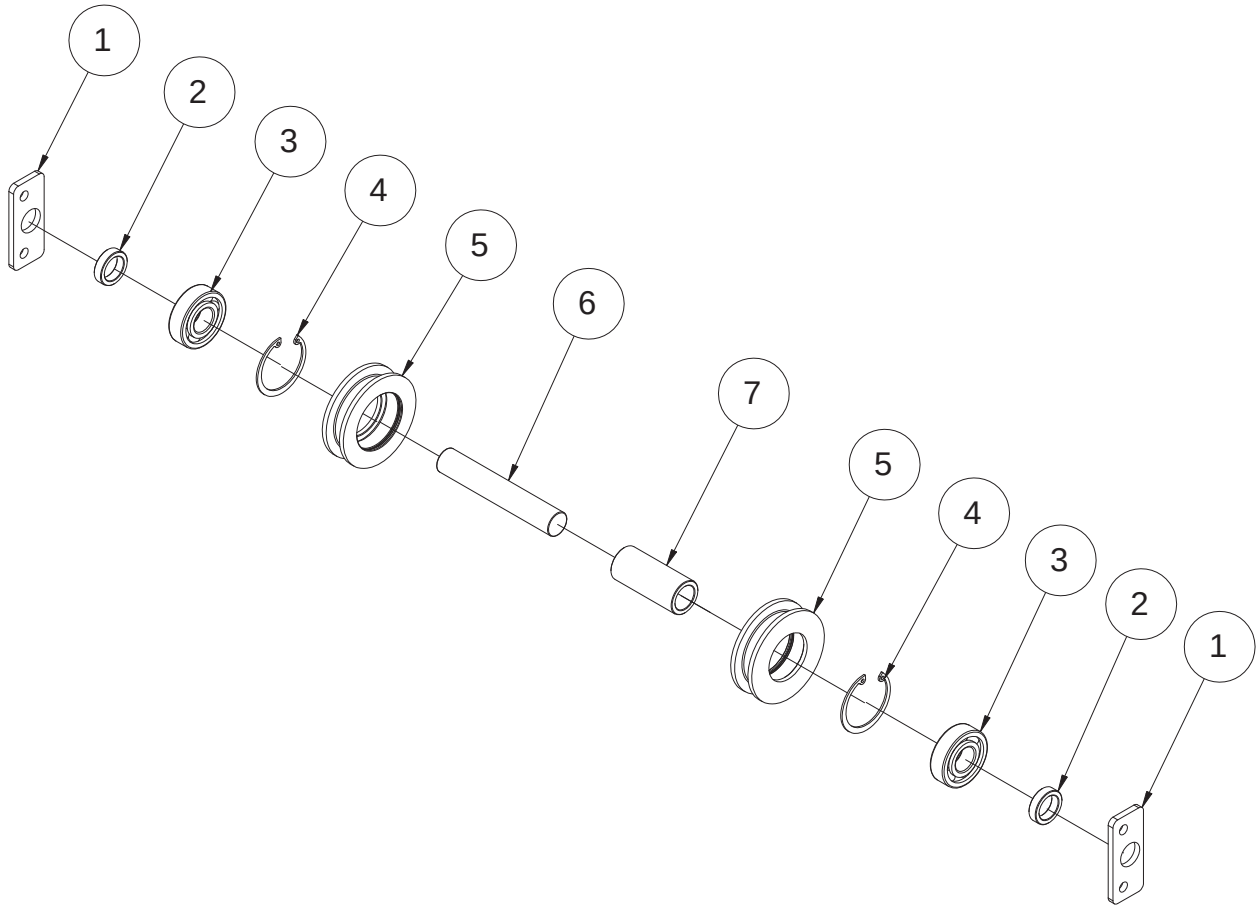

ILLUSTRATION No. Art_5759 Mast Series Pulley Assembly, 5-7 Mast (MME20)

Item	Part Number	Description	Qty.
1	44400	Plate	2
2	44401	Spacer	2
3	41131	Bearing	2
4	43618	Circlips	2
5	44402	Pulley	2
6	44403	Shaft	1
7	44404	Spacer	1

Pulley Assembly, 2-4 Mast

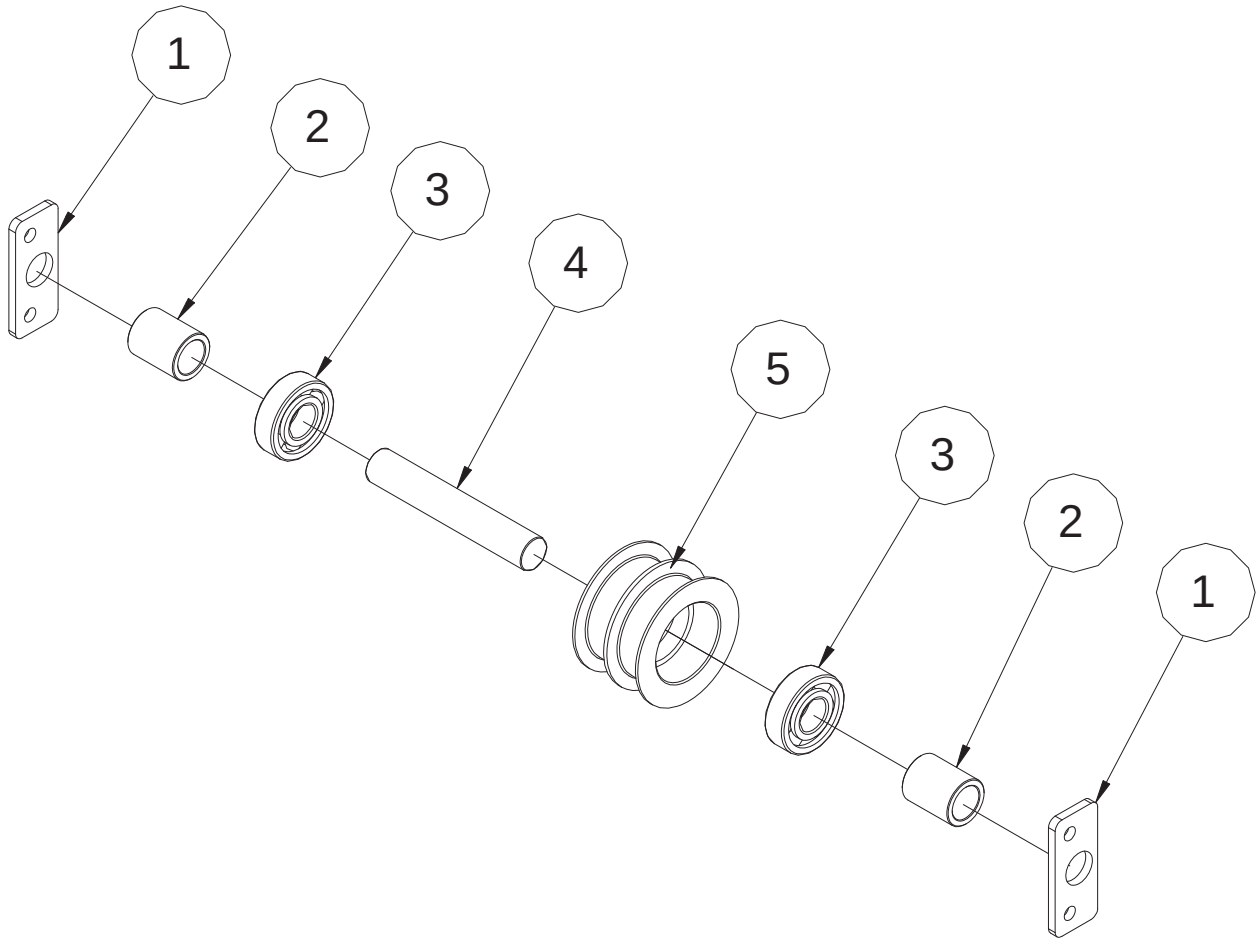

ILLUSTRATION No. Art_5760 Mast Series Pulley Assembly, 2-4 Mast

Item	Part Number	Description	Qty.
1	44400	Plate	2
2	44405	Spacer	2
3	41131	Bearing	2
4	44403	Shaft	1
5	44406	Pulley	1

Pulley Assembly, 1-3 Mast

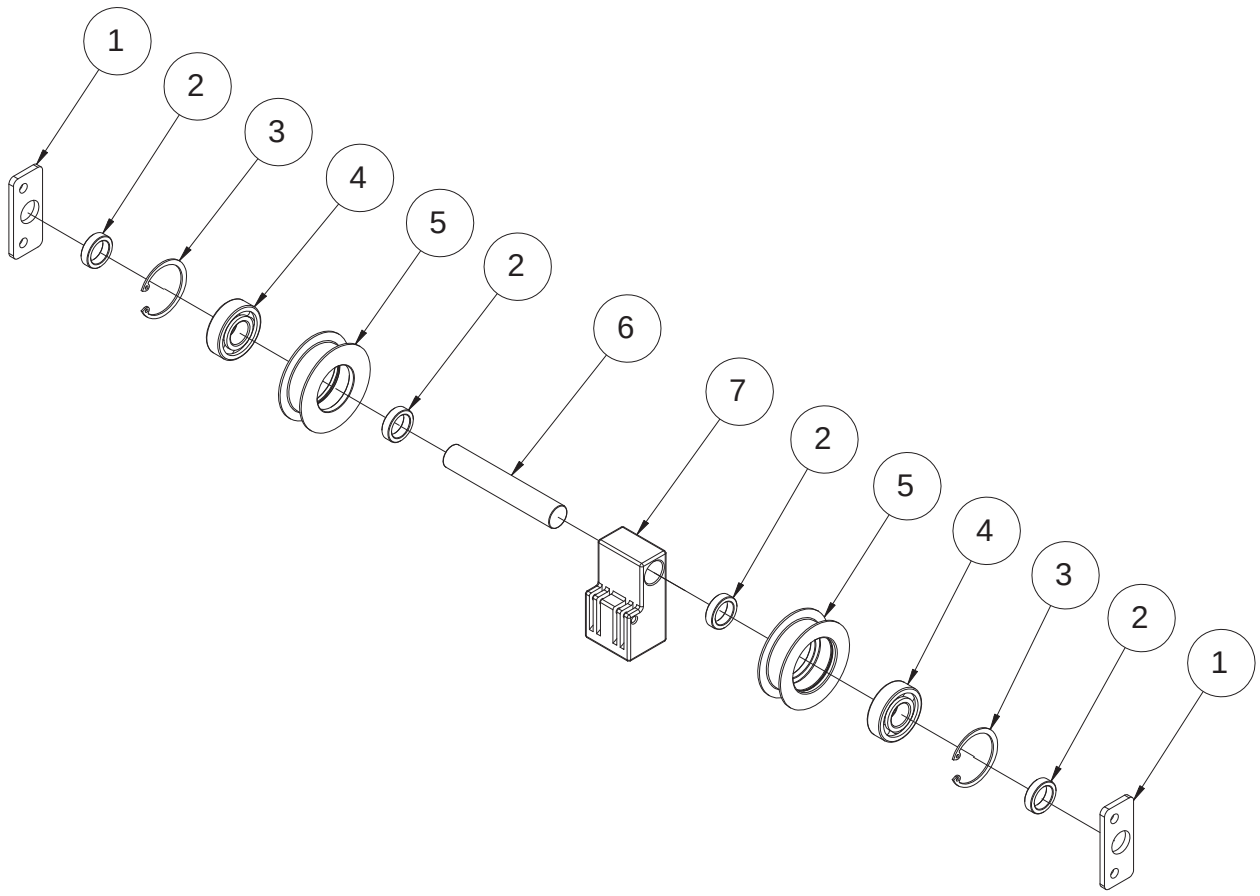

ILLUSTRATION No.
Art_5761

Mast Series

Pulley Assembly, 1-3 Mast

Item	Part Number	Description	Qty.
1	44400	Plate	2
2	44401	Spacer	4
3	43618	Circlips	2
4	41131	Bearing	2
5	44407	Pulley	2
6	44403	Shaft	1
7	44408	Chain Terminal	1

Pulley Assembly, 4-6 Mast (MME25)

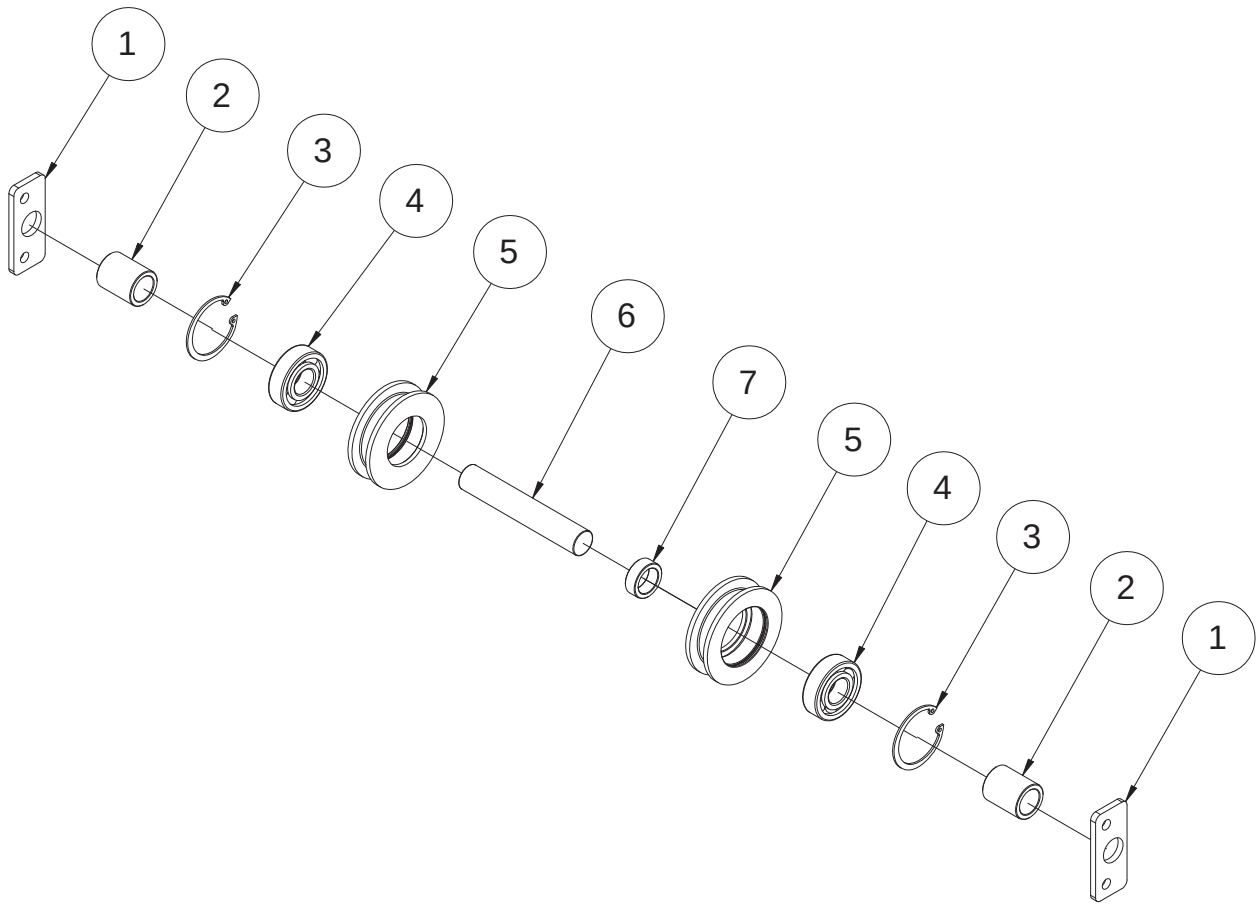

ILLUSTRATION No. Art_5762 Mast Series Pulley Assembly, 4-6 Mast (MME25)

Item	Part Number	Description	Qty.
1	44400	Plate	2
2	44405	Spacer	2
3	43618	Circlips	2
4	41131	Bearing	2
5	44402	Pulley	2
6	44403	Shaft	1
7	44409	Spacer	1

Pulley Assembly, 3-5 Mast

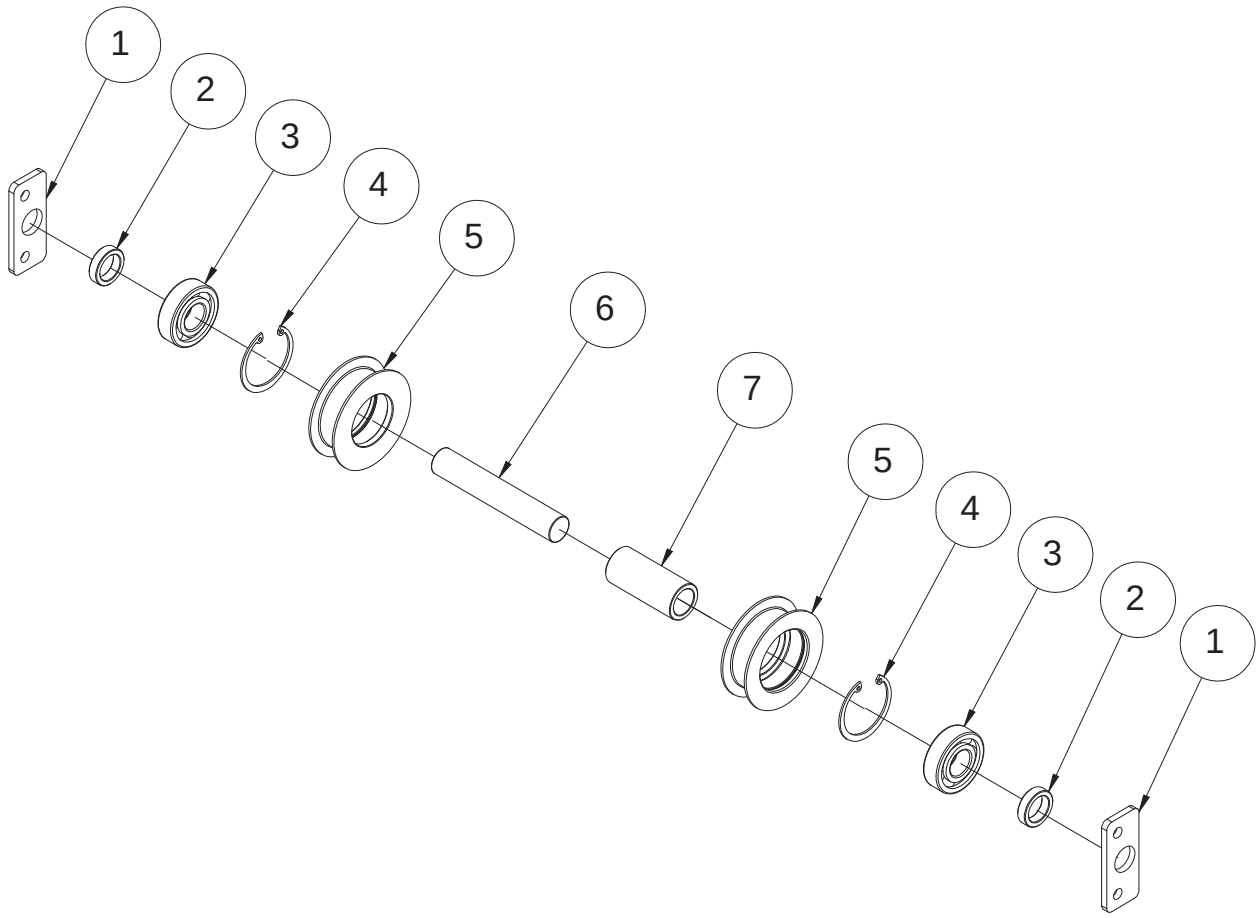

ILLUSTRATION No.
Art_5763

Mast Series

Pulley Assembly, 3-5 Mast

Item	Part Number	Description	Qty.
1	44400	Plate	2
2	44401	Spacer	2
3	41131	Bearing	2
4	43618	Circlips	2
5	44407	Pulley	2
6	44403	Shaft	1
7	44404	Spacer	1

Sequencing Cable Assembly (MME2)

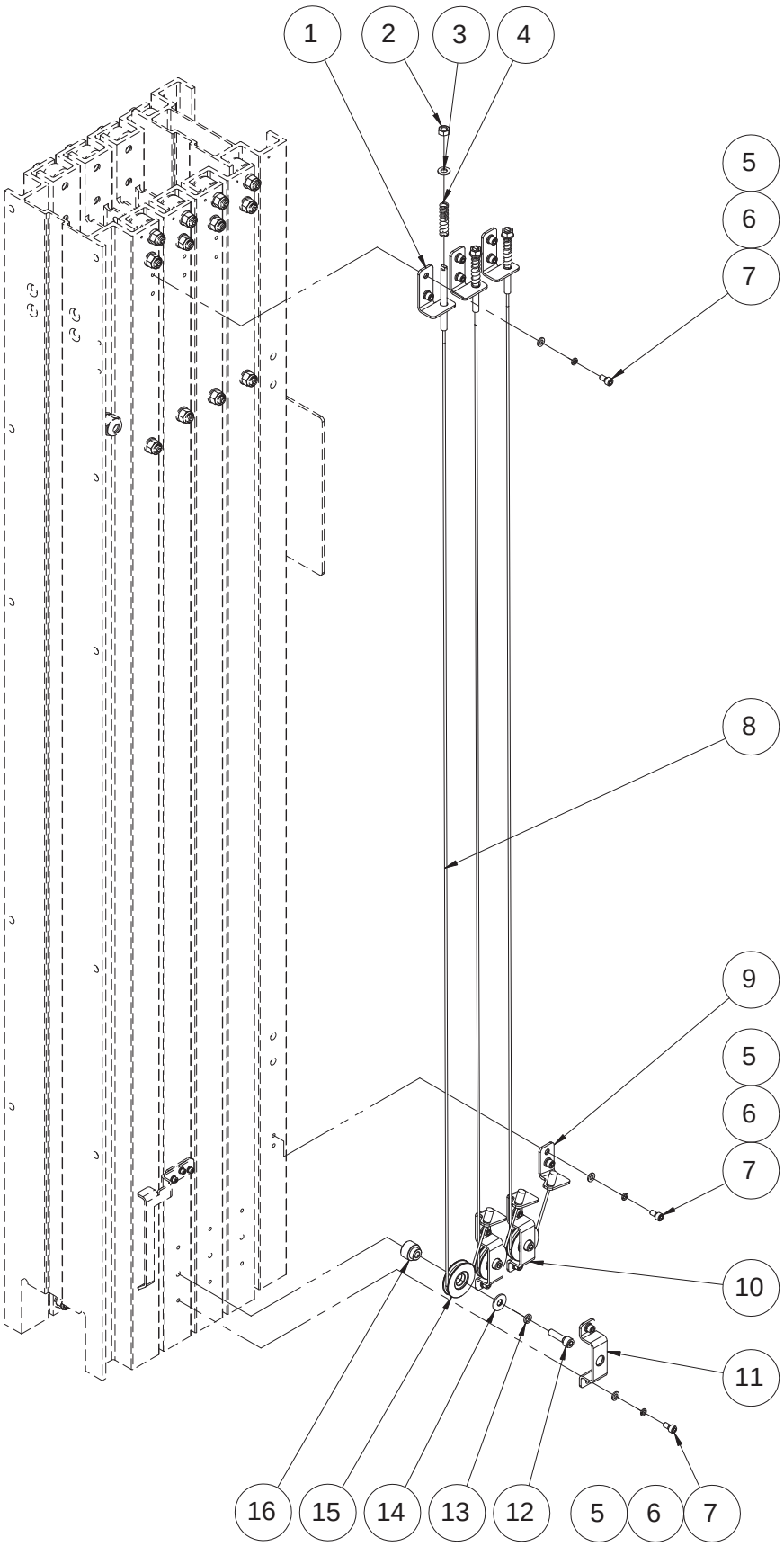

ILLUSTRATION No. Art_5764 Mast Series Sequencing Cable Assembly (MME20)

Item	Part Number	Description	Qty.
1	44410	Cable Bracket	3
2	53014	Nut NHEX M08-1.25	3
3	50001	WSHR M08 Standard Flat Washer	3
4	44411	Spring	3
5	50000	WSHR M06 Standard Flat Washer	14
6	53046	WSHR M06 Spring Washer	14
7	53380	Screw SHCS M06-1.00 × 12	14
8	44412	Cable	3
9	44413	Cable Bracket	1
10	44414	Cable Bracket	2
11	44415	Cable Bracket	1
12	53385	Screw SHCS M08-1.25 × 30	3
13	53055	WSHR M08 Spring Washer	3
14	44416	Washer	3
15	44417	Pulley	3
16	44418	Spacer	3

Sequencing Cable Assembly (MME25)

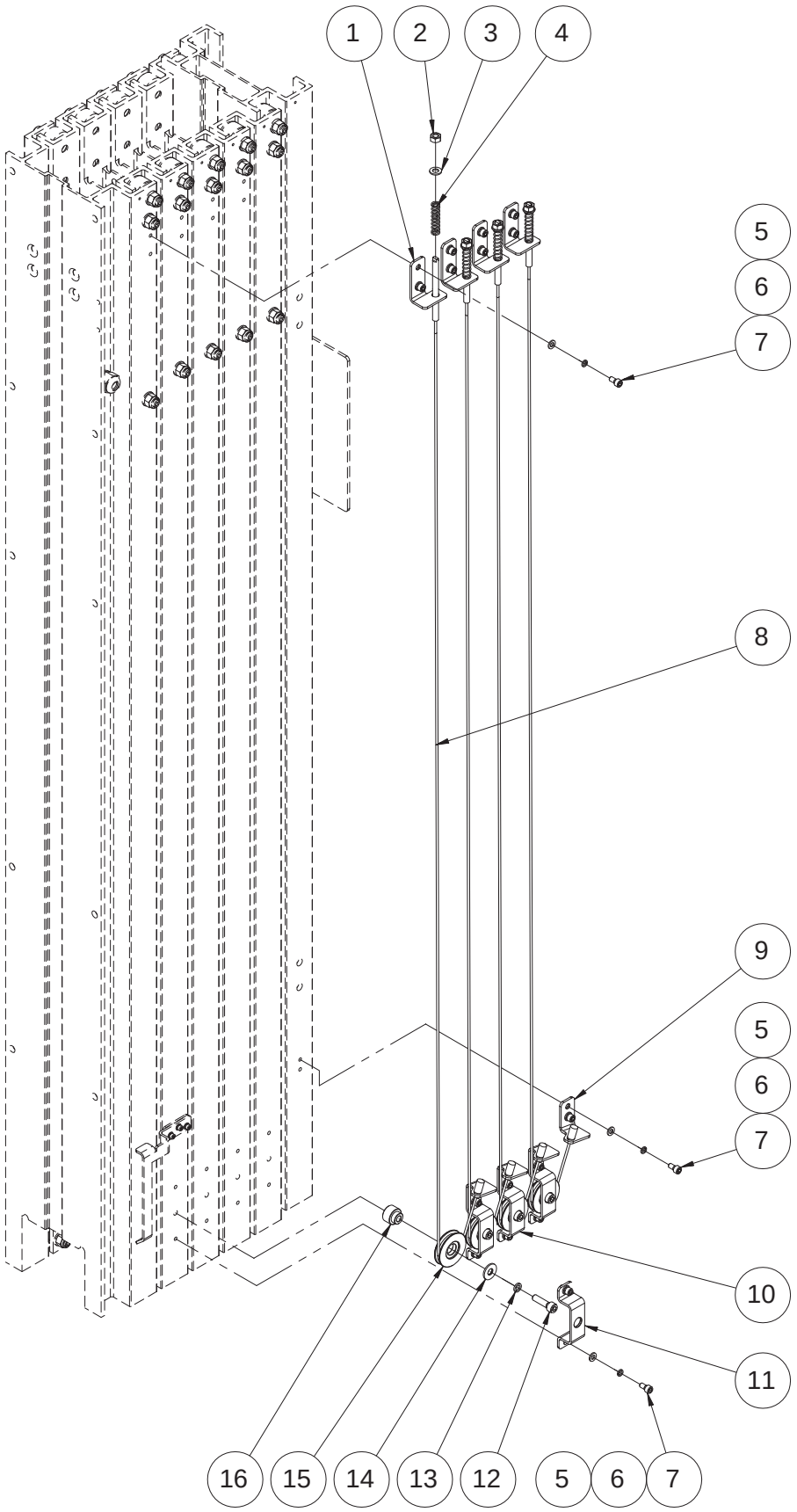

ILLUSTRATION No. Art_5765 Mast Series Sequencing Cable Assembly (MME25)

Item	Part Number	Description	Qty.
1	44410	Cable Bracket	4
2	53014	Nut NHEX M08-1.25	4
3	50001	WSHR M08 Standard Flat Washer	4
4	44411	Spring	4
5	50000	WSHR M06 Standard Flat Washer	18
6	53046	WSHR M06 Spring Washer	18
7	53380	Screw SHCS M06-1.00 × 12	18
8	44412	Cable	4
9	44413	Cable Bracket	1
10	44414	Cable Bracket	3
11	44415	Cable Bracket	1
12	53385	Screw SHCS M08-1.25 × 30	4
13	53055	WSHR M08 Spring Washer	4
14	44416	Washer	4
15	44417	Pulley	4
16	44418	Spacer	4

Platform and Mast Installation

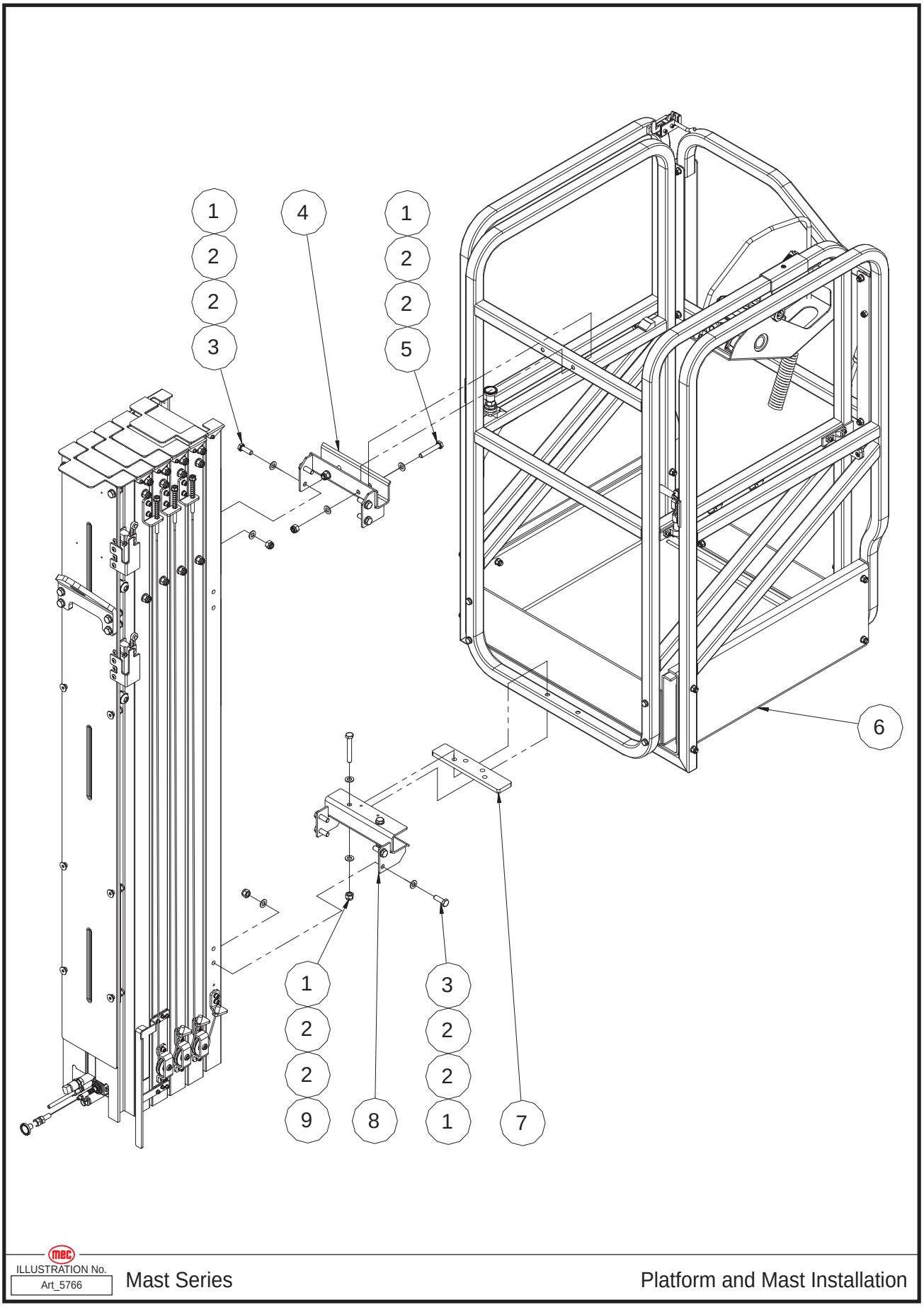

Item	Part Number	Description	Qty.
1	50049	Nut NNYL M10 × 1.50	8
2	50002	WSHR M10 Standard Flat Washer	16
3	50034	Screw HHCS M10-1.50 × 30	8
4	44419	Platform Mount Upper Bracket	1
5	50421	Screw HHCS M10-1.50 × 60	2
6	REF	Platform Assembly (Refer To page 99)	1
7	44420	Block	1
8	44421	Platform Mount Lower Bracket	1
9	50022	Screw HHCS M10-1.50 × 70	2

REF - Reference

Platform Assembly

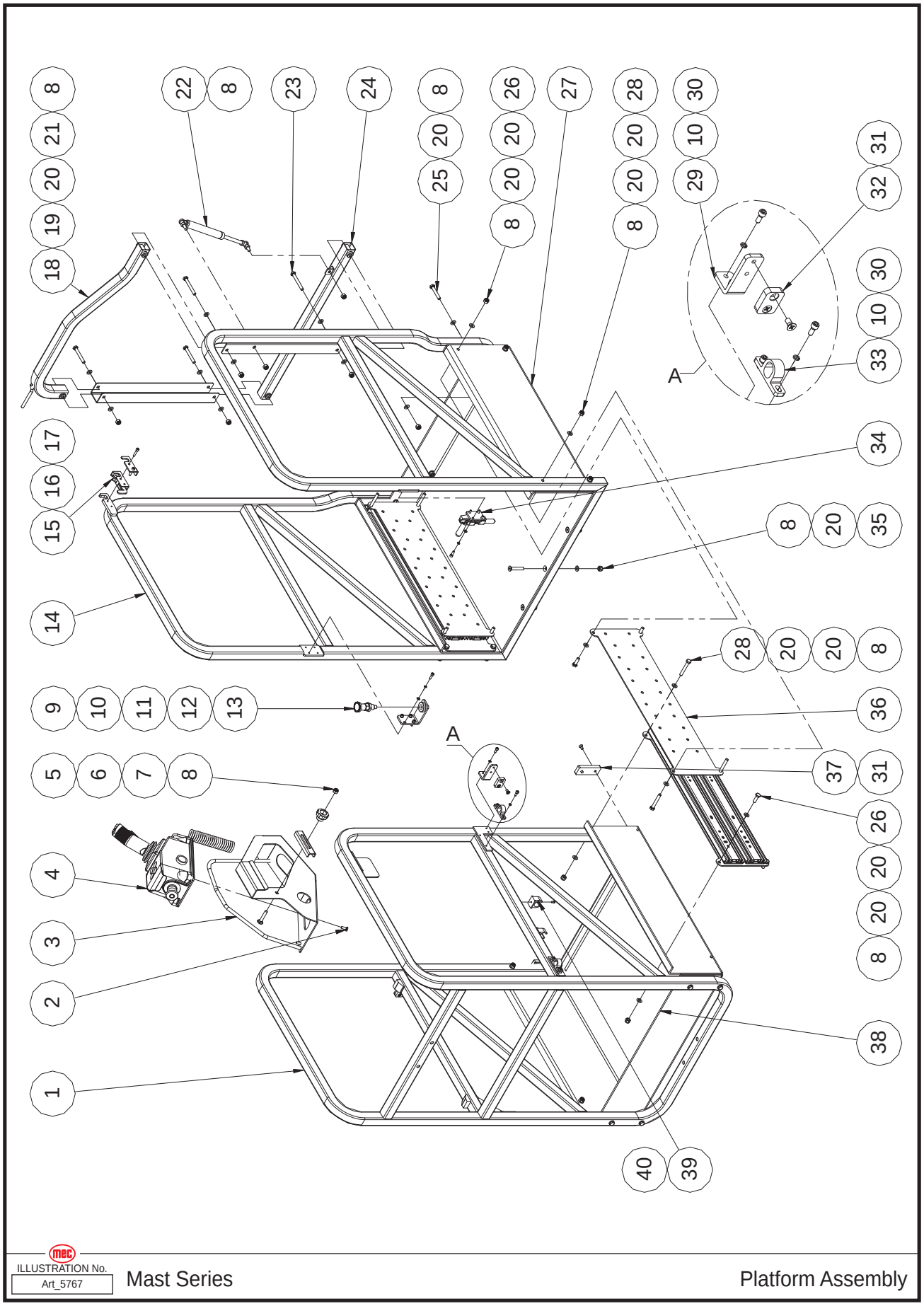

Item	Part Number	Description	Qty.
1	44422	Main Rail Weldment	1
2	53231	Screw PHMS M06-1.00 × 16	4
3	44423	Platform Control Box Mount Bracket	1
4	41137	Platform Control Box Assembly (Refer To page 103)	1
5	53248	Screw CARB M08-1.25 × 45	1
6	42500	Locating Plate	1
7	42501	Handle	1
8	50048	Nut NNYL M08 × 1.25	34
9	50359	Screw SHCS M05-0.80 × 16	8
10	53043	WSHR M05 Spring Washer	16
11	53038	WSHR M05 Standard Flat Washer	8
12	44424	Bracket	1
13	44016	Lock Pin	1
14	44425	Extension Rail Weldment	1
15	44426	Lock	1
16	44427	Cover	1
17	53356	Screw SHCS M05-0.80 × 25	2
18	44428	Upper Pole	1
19	50017	Screw HHCS M08-1.25 × 60	2
20	50001	WSHR M08 Standard Flat Washer	59
21	44429	Sideward Pole	1
22	44430	Gas Shock	1
23	50251	Screw HHCS M08-1.25 × 65	2
24	44431	Lower Pole	1
25	50015	Screw HHCS M08-1.25 × 50	8
26	50031	Screw HHCS M08-1.25 × 25	8
27	44432	Extension Deck Weldment	1
28	50016	Screw HHCS M08-1.25 × 55	8
29	44433	Bracket	2
30	53116	Screw SHCS M05-0.80 × 12	8
31	53393	Screw CSCS M06-1.00 × 12	8
32	44434	Baffle Block	2
33	44435	Positioning Block	2
34	44436	Lock Pin	1
35	53394	Screw CSCS M08-1.25 × 50	3
36	44437	Glide Track	2
37	44438	Baffle Block	2
38	44439	Main Deck Weldment	1
39	41134	Clip	2
40	53276	Screw PHMS M04-0.70 × 8	2

Ceiling Grid Platform

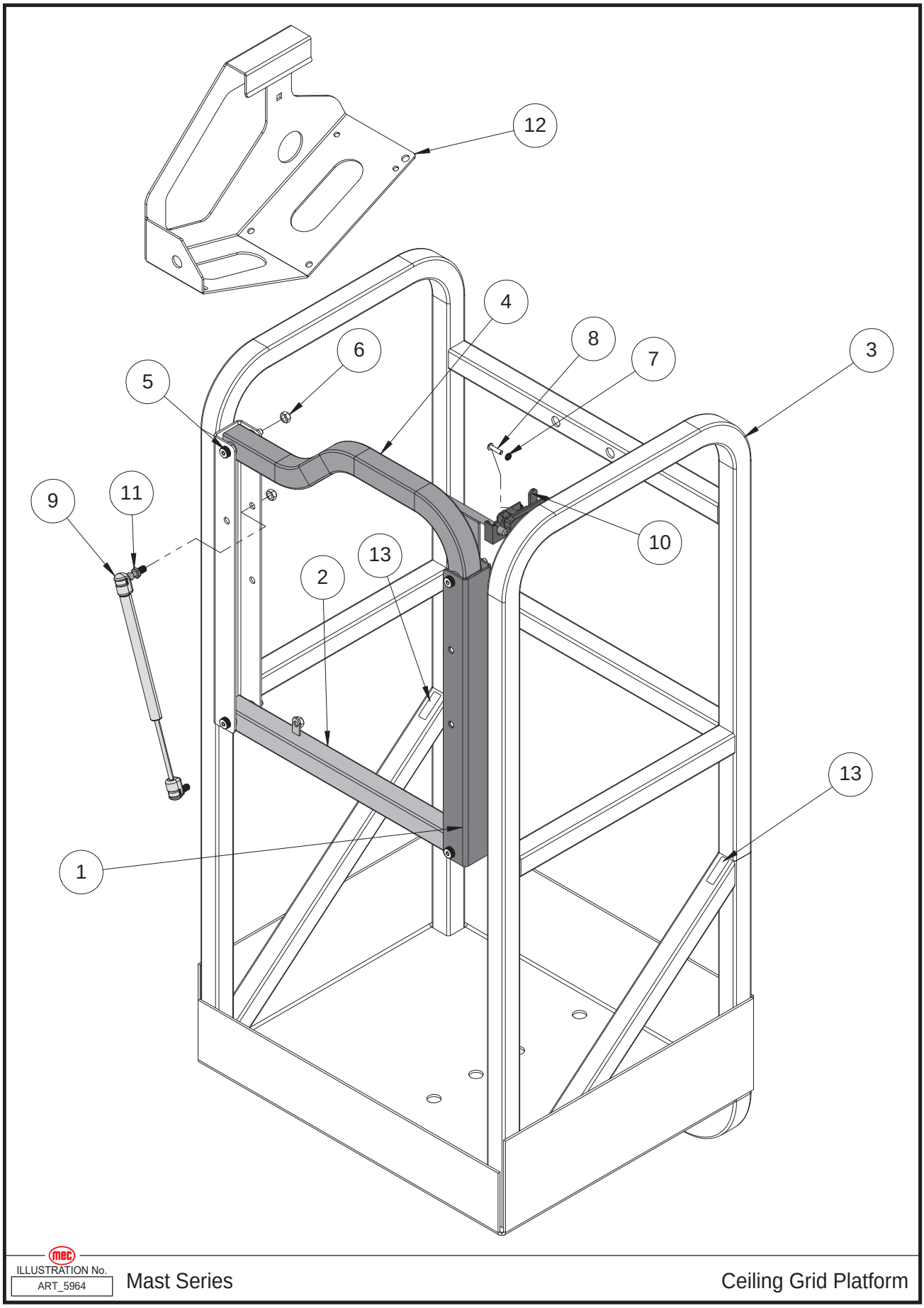

Item	Part Number	Description	Qty.
1	44463	Entry Gate Side Forming	1
2	44635	Mini J Lower Bar Weldment	1
3	44846	Ceiling Grid Platform Weldment Continuous Bend	1
4	44847	J Bar Weldment Ceiling Grid	1
5	53423	SHSS 3/8 SHLDR DIA X 2 SHLDR LG 5-16 X 18 THRD SS	4
6	53424	NNYL 5/16-18 SS Top Lock	6
7	53427	WSHR M5 ZP Nord Lock	2
8	53428	BHCS M5 X 20 SS BL OX Hex Drive	2
9	95833	Gas Spring 12” Closed Length 3.5” Stroke	1
10	95899	Thumb Latch	1
11	95900	Ball Stud Gas Spring Rod Attachment	2
12	18742	Ceiling Grid CTRL Box Forming	1
13	41648	Decal - Lanyard Anchorage	2

Platform Control Box Assembly

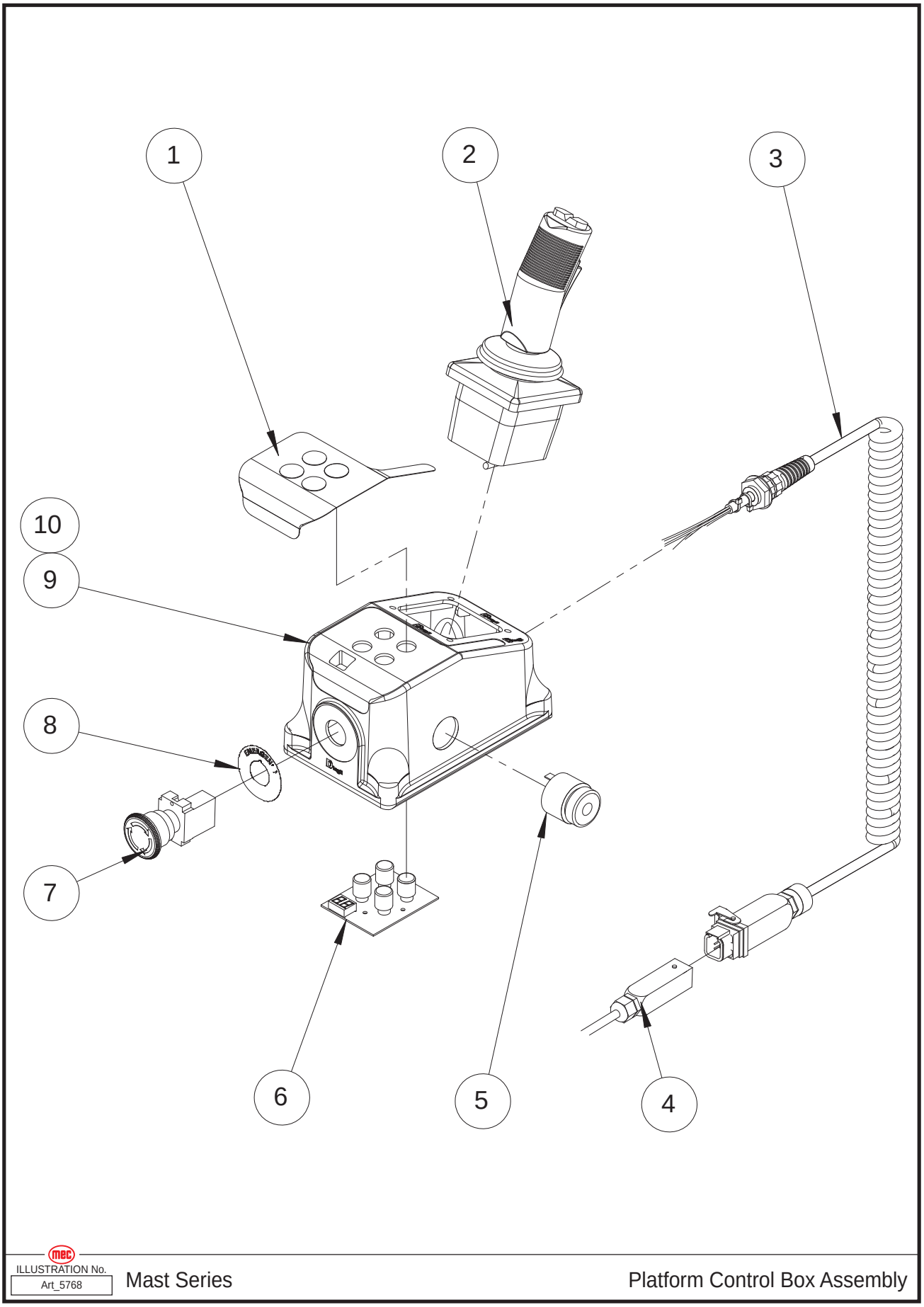

Item	Part Number	Description	Qty.
1	41632	Decal, Platform Control Panel	1
2	41149	Joystick	1
--	43621	Function Enable Switch	1
--	41150	Joystick Cover	1
--	43622	Joystick Steer Switch	1
--	43623	Switch Boot	1
3	41152	Coil Cord	1
--	43624	Housing	1
--	43625	Male Insert	1
--	43626	Male Contacts	5
--	43627	Cable Gland	1
4	44440	Linkage Communication Harness, MME20	1
	44587	Linkage Communication Harness, MME25	1
--	43628	Hood	1
--	43629	Female Insert	1
--	43630	Female Contacts	5
--	43627	Cable Gland	1
5	41568	Alarm	1
--	43631	Alarm Nut	1
6	41156	Main Board	1
--	41155	Button	4
7	41157	Emergency Stop Switch	1
--	43632	Red Mushroom Head	1
--	43633	Base With 1 NC Contact	1

Lift Cylinder Assembly

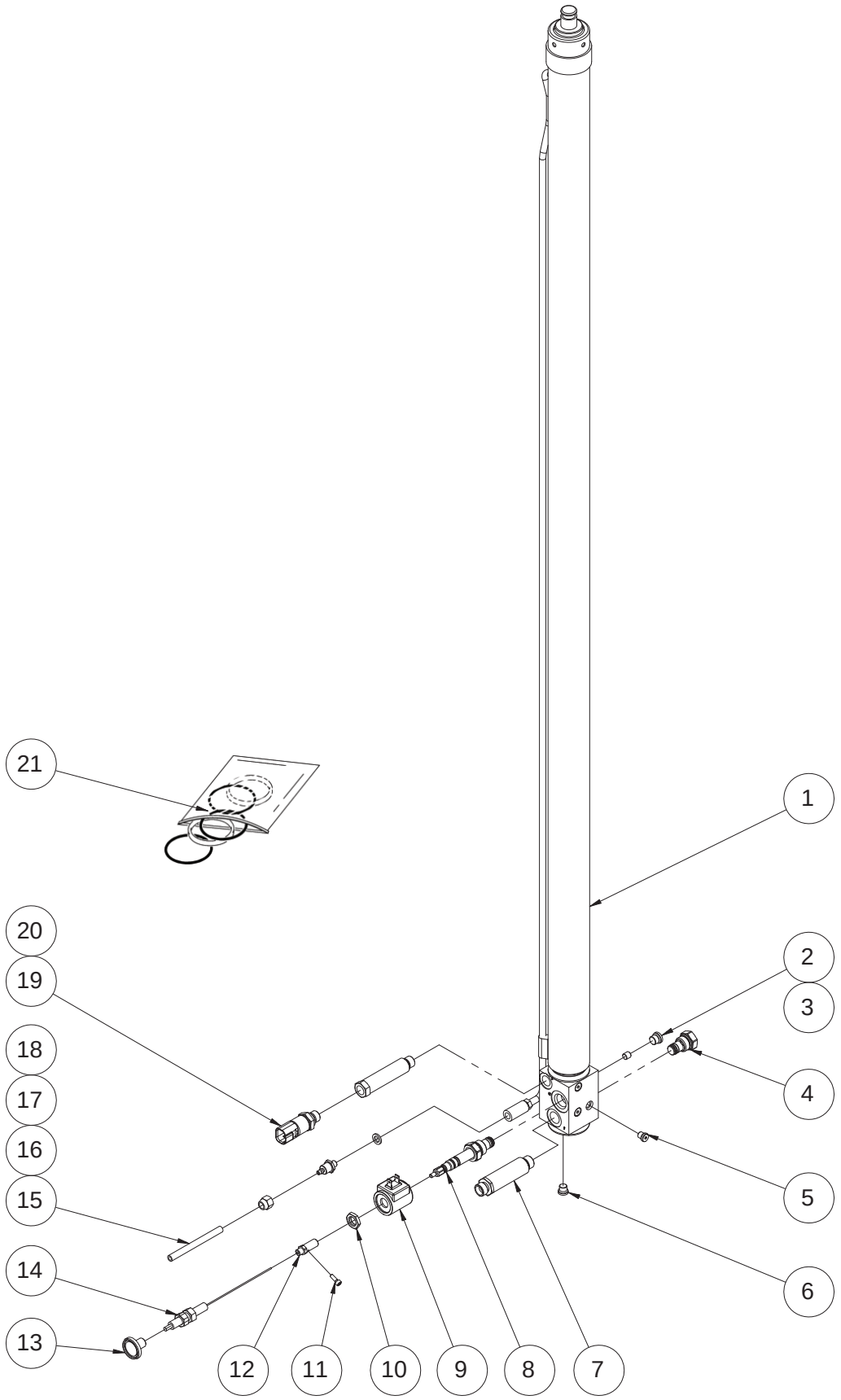

ILLUSTRATION No. Art_5769 Mast Series Lift Cylinder Assembly

Item	Part Number	Description	Qty.
1	44441	Lift Cylinder	1
2	42821	Plug	2
3	43432	Orifice (MME20)	1
4	43369	Check Valve	1
5	43465	Plug	3
6	43643	Plug	2
7	44443	Straight Fitting	1
8	44444	Solenoid Valve Spool	1
9	41551	Coil	1
10	42795	Nut	1
11	50423	Screw SHCS M04-0.70 × 12	1
12	43365	Cable Connector	1
13	41162	Lowering Knob	1
14	44445	Emergency Down Cable Assembly	1
15	43600	Hose	1
16	41413	Nut	1
17	44446	Fitting	1
18	44447	Washer	1
19	44448	Pressure Sensor	1
20	44449	Fitting	1
21	44450	Seal Kit	1

Function Manifold Assembly

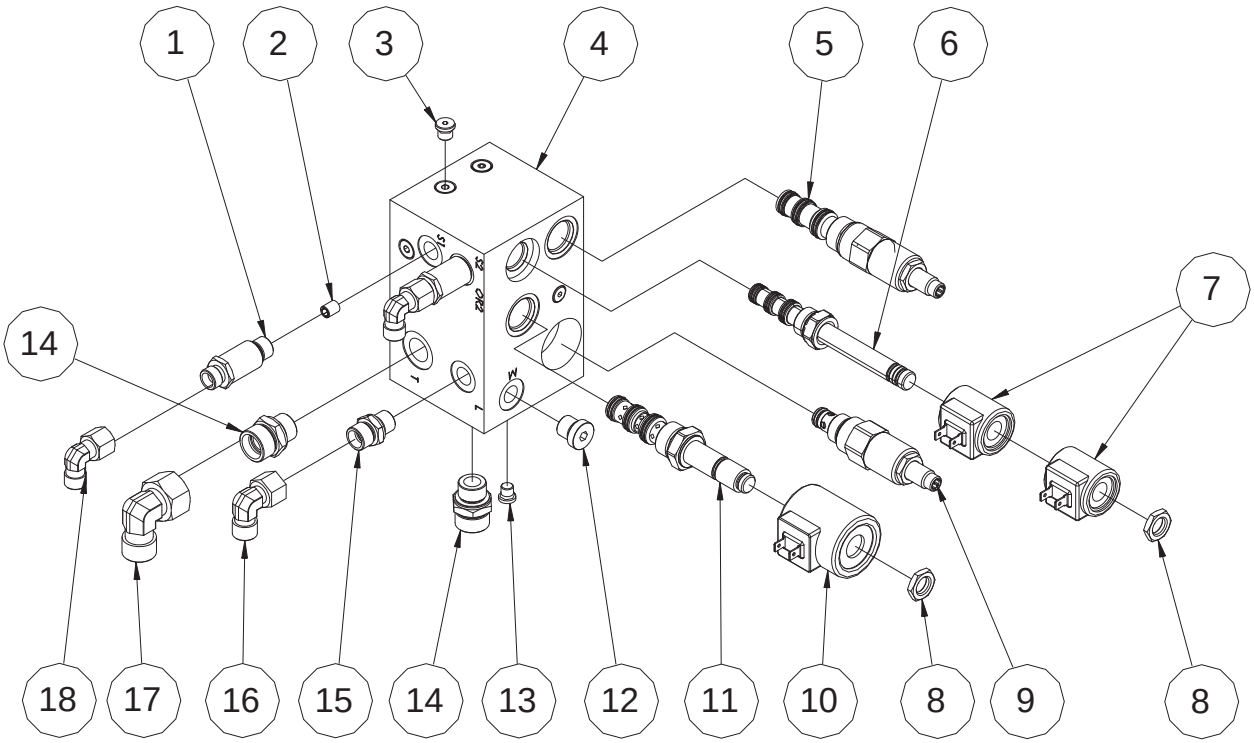

ILLUSTRATION No.
Art_5770

Mast Series

Function Manifold Assembly

Item	Part Number	Description	Qty.
1	44451	Straight Fitting	2
2	43645	Orifice	2
3	43643	Plug	2
4	44452	Valve Body	1
5	44453	Steer Priority Flow Control Valve (FRV1)	1
6	41537	Solenoid Valve Spool (SV1), Steer	1
7	41551	Coil	2
8	42795	Nut	2
9	41549	Relief Valve	1
10	41550	Coil	1
11	41548	Solenoid Valve Spool (SV2), Lift	1
12	42480	Plug	1
13	43465	Plug	7
14	43582	Straight Fitting	2
15	41298	Straight Fitting	1
16	43639	Elbow	1
17	43206	Elbow	1
18	43077	Elbow	2

Hydraulic Hoses and Fittings

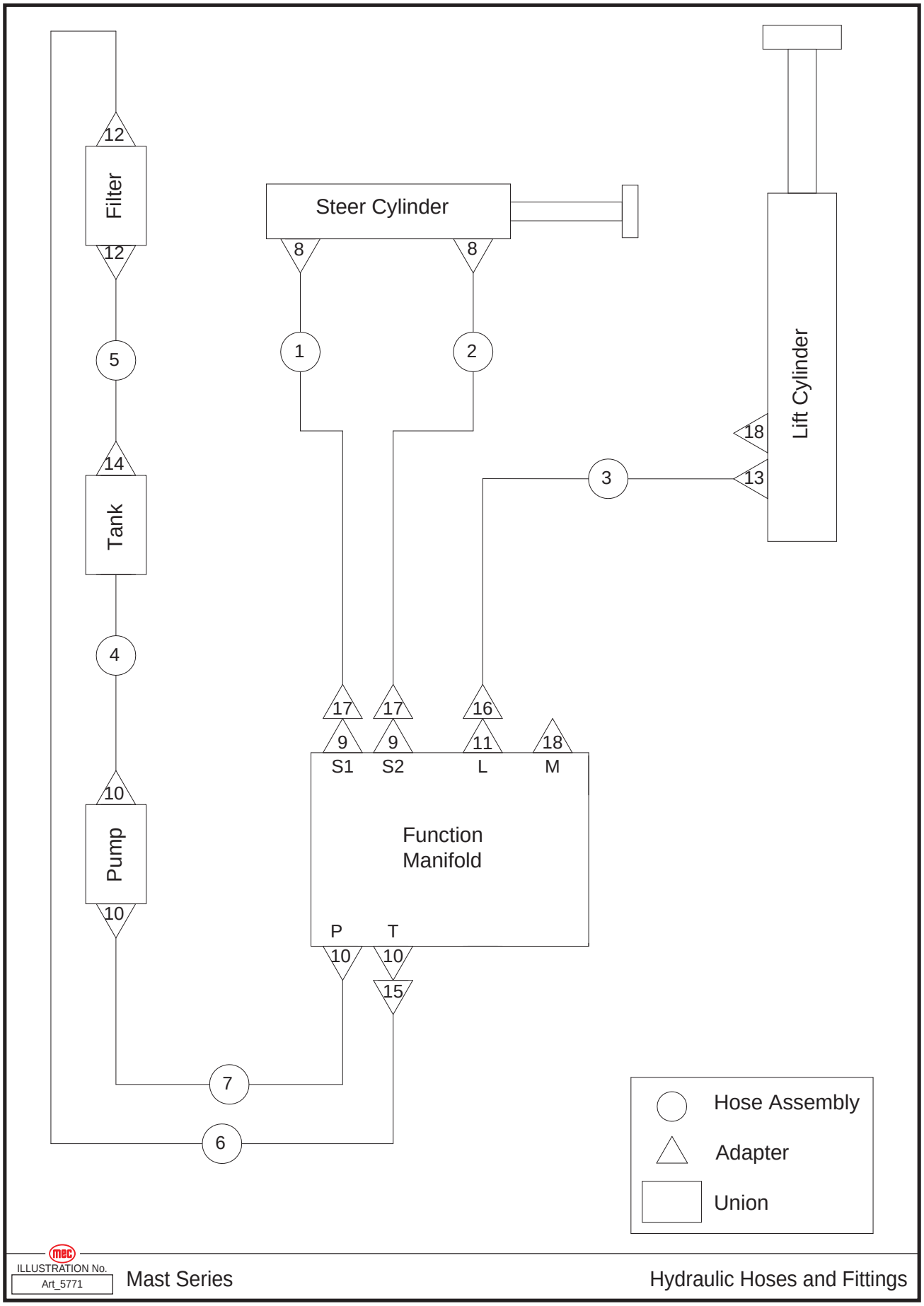

Item	Part Number	Description	Qty.
1	44454	Hose Assembly, S1 Steer Hose	1
2	44455	Hose Assembly, S2 Speed Hose	1
3	44456	Hose Assembly, Lift Hose	1
4	44457	Hose Assembly, Suction Hose	1
5	44458	Hose Assembly, Filter To Tank Hose	1
6	44459	Hose Assembly, Return Hose	1
7	44460	Hose Assembly, Main Pump Hose	1
8	43076	Straight Fitting	2
9	44451	Straight Fitting	2
10	43582	Straight Fitting	4
11	41298	Straight Fitting	1
12	43576	Straight Fitting	2
13	44443	Straight Fitting	1
14	41085	Fitting	1
15	43206	Elbow	1
16	43639	Elbow	1
17	43077	Elbow	2
18	--	Refer To Lift Cylinder Assembly Items #15-18	--

Electrical Harness

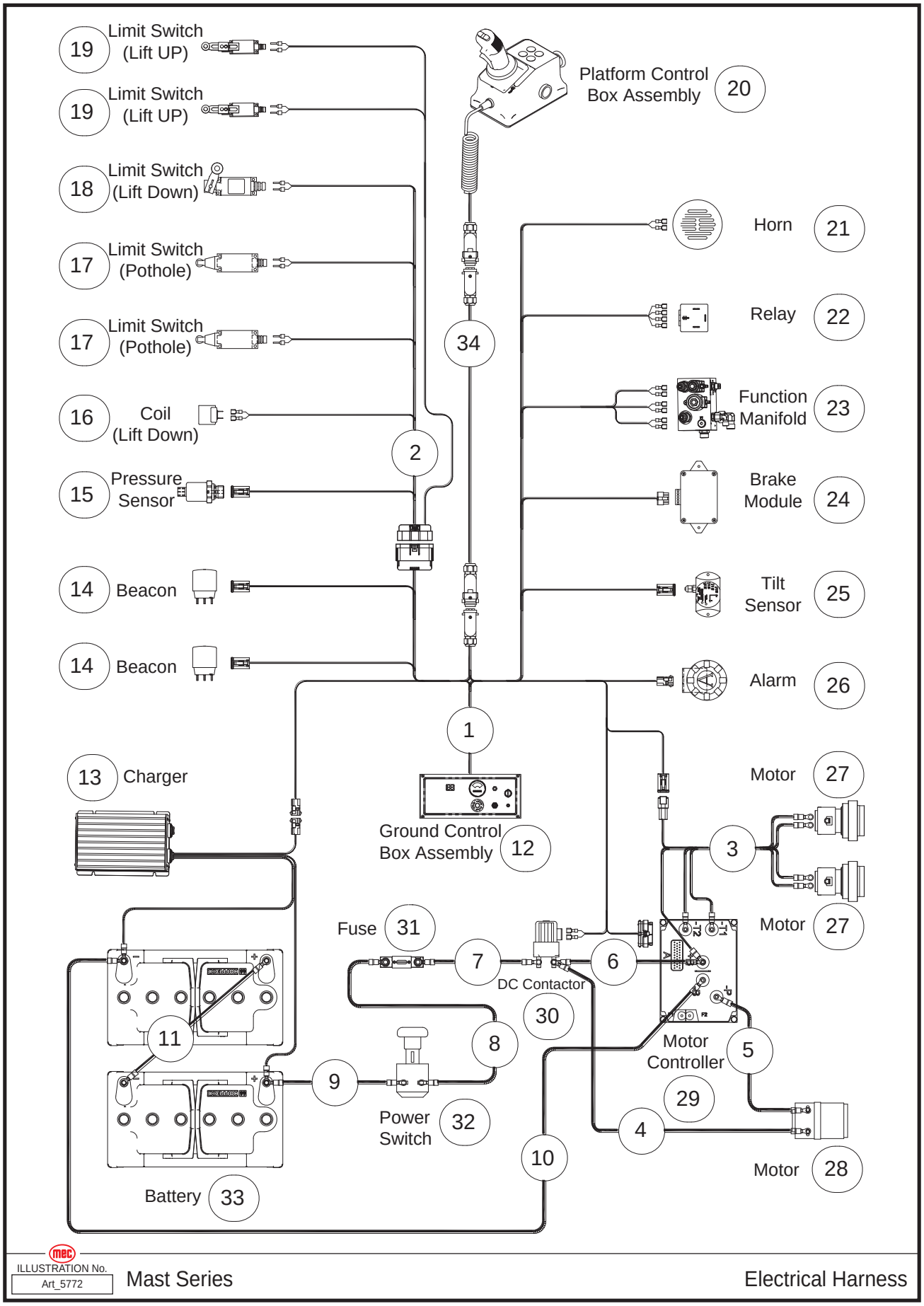

Item	Part Number	Description	Qty.
1	44461	ECU Harness	1
2	44540	Sensor Harness	1
3	44541	Drive Motor Harness	1
4	44542	Power Harness	1
5	44543	Power Harness	1
6	44544	Power Harness	1
7	44545	Power Harness	1
8	44546	Power Harness	1
9	44547	Power Harness	1
10	44548	Power Harness	1
11	44549	Power Harness	1
12	44550	Ground Control Box Assembly	1
13	42904	Charger	1
14	44298	Beacon	2
15	44448	Pressure Sensor	1
16	41551	Coil, Lift Down	1
17	41197	Limit Switch, Pothole	2
18	42074	Limit Switch, Lift Down	1
19	42402	Limit Switch, Lift Up	2
20	41137	Platform Control Box Assembly	1
21	41075	Horn	1
22	41334	Relay	1
23	44551	Function Manifold	1
24	41094	Brake Module	1
25	44572	Tilt Sensor	1
26	41074	Alarm	1
27	43558	Drive Motor Assembly	2
28	41608	Pump Motor Assembly	1
29	41093	Motor Controller	1
30	41331	DC Contactor	1
31	44014	200A Fuse	1
32	42071	Power Switch	1
33	44019	Battery	2
34	44440	Linkage Communication Harness, MME20	1
	44587	Linkage Communication Harness, MME25	1
35	44842	Harness, Power To Platform Cable, MME20	1
	44843	Harness, Power To Platform Cable, MME25	1

Leak Containment System, MME20

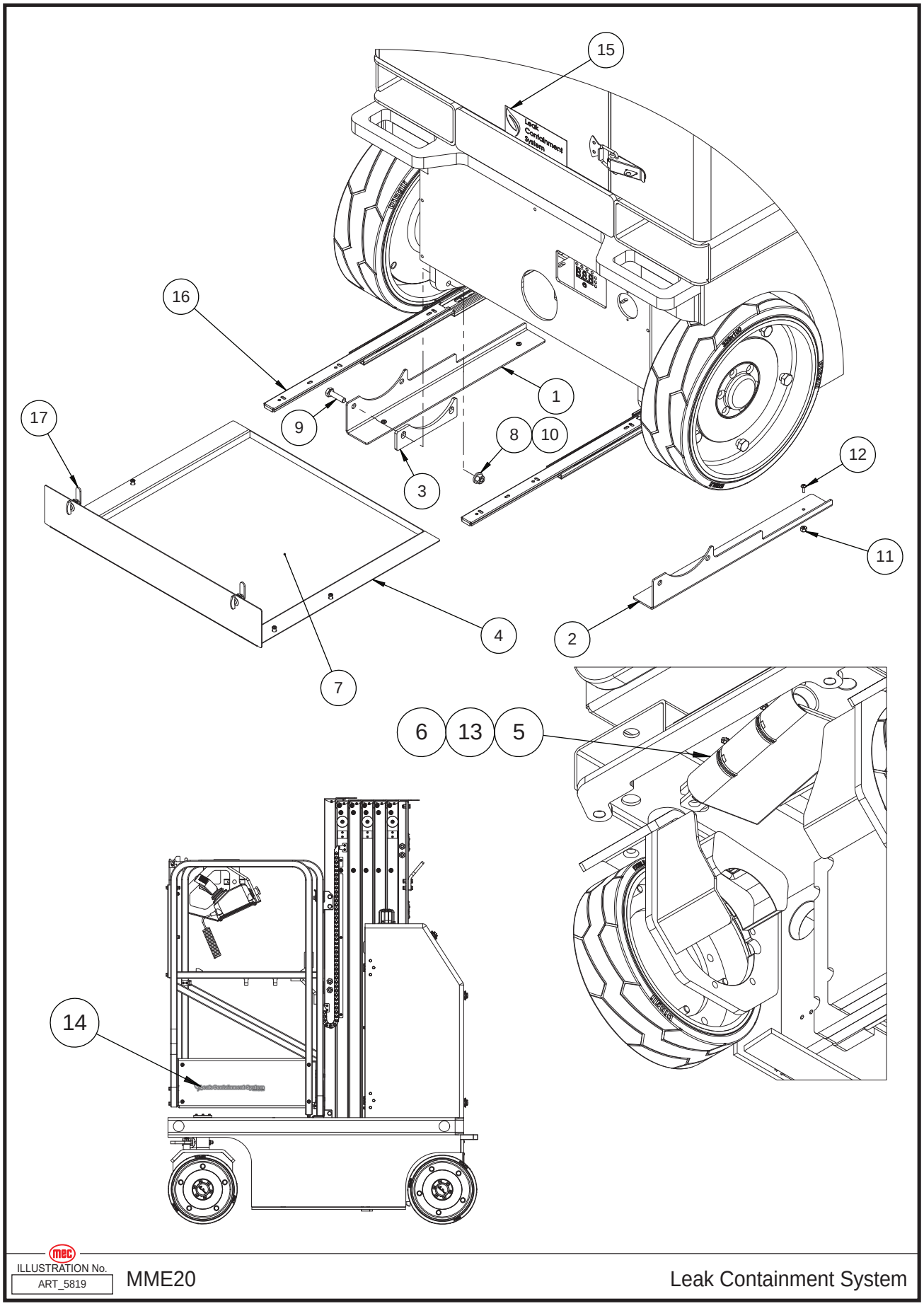

Item	Part Number	Description	Qty.
1	18553	Drawer Slide Mount LH	1
2	18554	Drawer Slide Mount RH	1
3	18557	LCS Spacer MME 20	2
4	18562	Drip Pan Assembly LCS MME	1
5	18563	Steer Cylinder Containment Tray MME	1
6	18564	Absorbent Pad For Steer Cylinder Guard	1
7	44504	Absorbent Pad Drip Pan LCS MME	1
8	50001	WSHR M08 ZP Standard Flat	4
9	50032	HHCS M8-1.25 x 30 ZP	4
10	50048	NNYL M08X1.25 08 ZP Nylon	4
11	53336	NNYL 8-32 SS	4
12	53407	PHMS 8-32 X 7/16" ZP	4
13	7545	Clamp Hose #28 1 5/16-2 1/4	2
14	94866	Decal, Leak Containment System, Long	2
15	94867	Decal, Leak Containment System, Small	1
16	95619	Drawer Slides W/ Lever Release 15-3/4 Closed LG SS	2
17	95620	Wing Handle Cam Latch 5/16 Max THK ZP	2

Leak Containment System, MME25

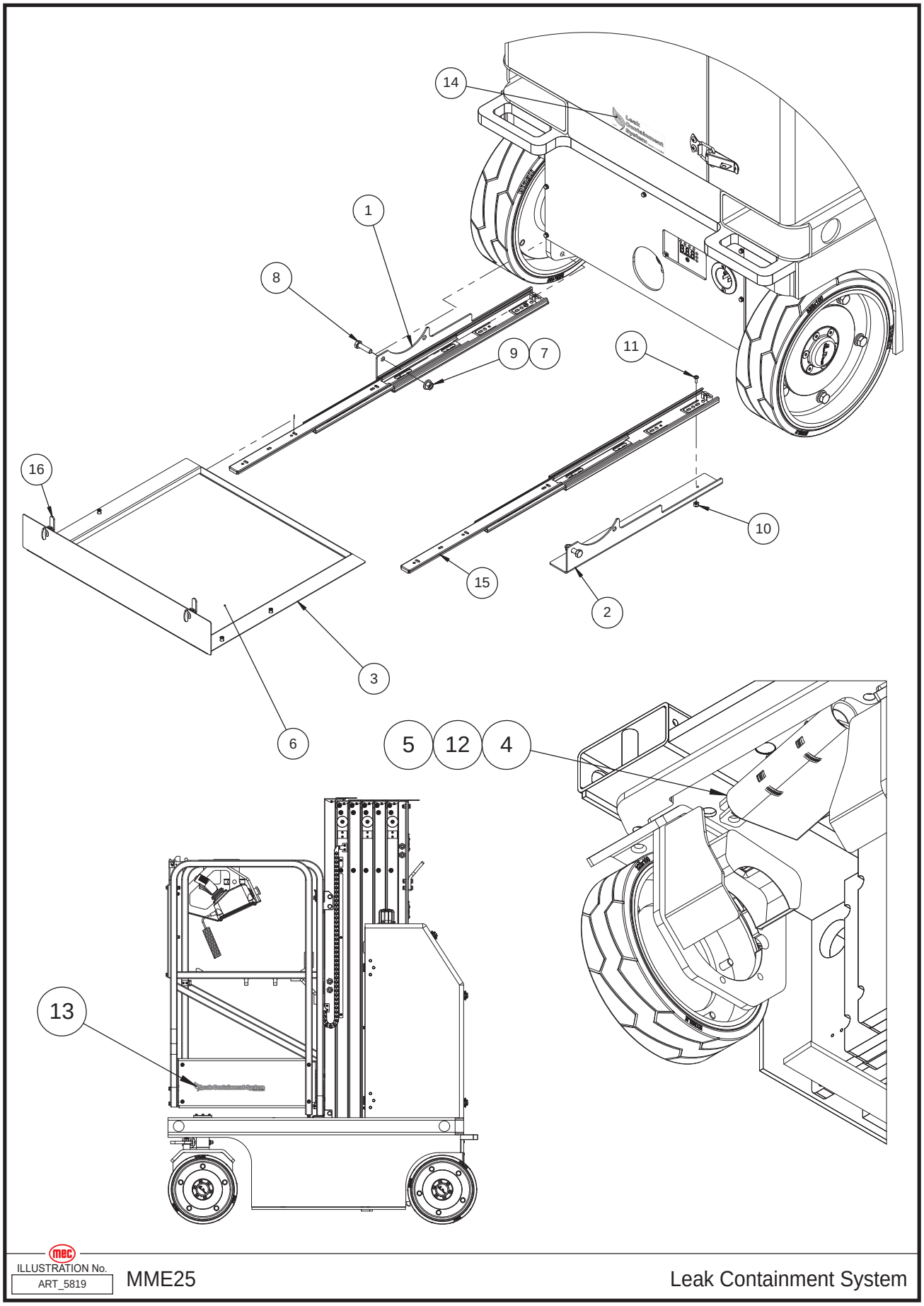

Item	Part Number	Description	Qty.
1	18553	Drawer Slide Mount LH	1
2	18554	Drawer Slide Mount RH	1
3	18562	Drip Pan Assembly LCS MME	1
4	18563	Steer Cylinder Containment Tray MME	1
5	18564	Absorbent Pad For Steer Cylinder Guard	1
6	44504	Absorbent Pad Drip Pan LCS MME	1
7	50001	WSHR M08 ZP Standard Flat	4
8	50032	HHCS M8-1.25 x 30 ZP	4
9	50048	NNYL M08X1.25 08 ZP Nylon	4
10	53336	NNYL 8-32 SS	3
11	53407	PHMS 8-32 X 7/16" ZP	3
12	7545	Clamp Hose #28 1 5/16-2 1/4	2
13	94866	Decal, Leak Containment System, Long	2
14	94867	Decal, Leak Containment System, Small	1
15	95619	Drawer Slides W/ Lever Release 15-3/4 Closed LG SS	2
16	95620	Wing Handle Cam Latch 5/16 Max THK ZP	2

Hardware Tool Tray

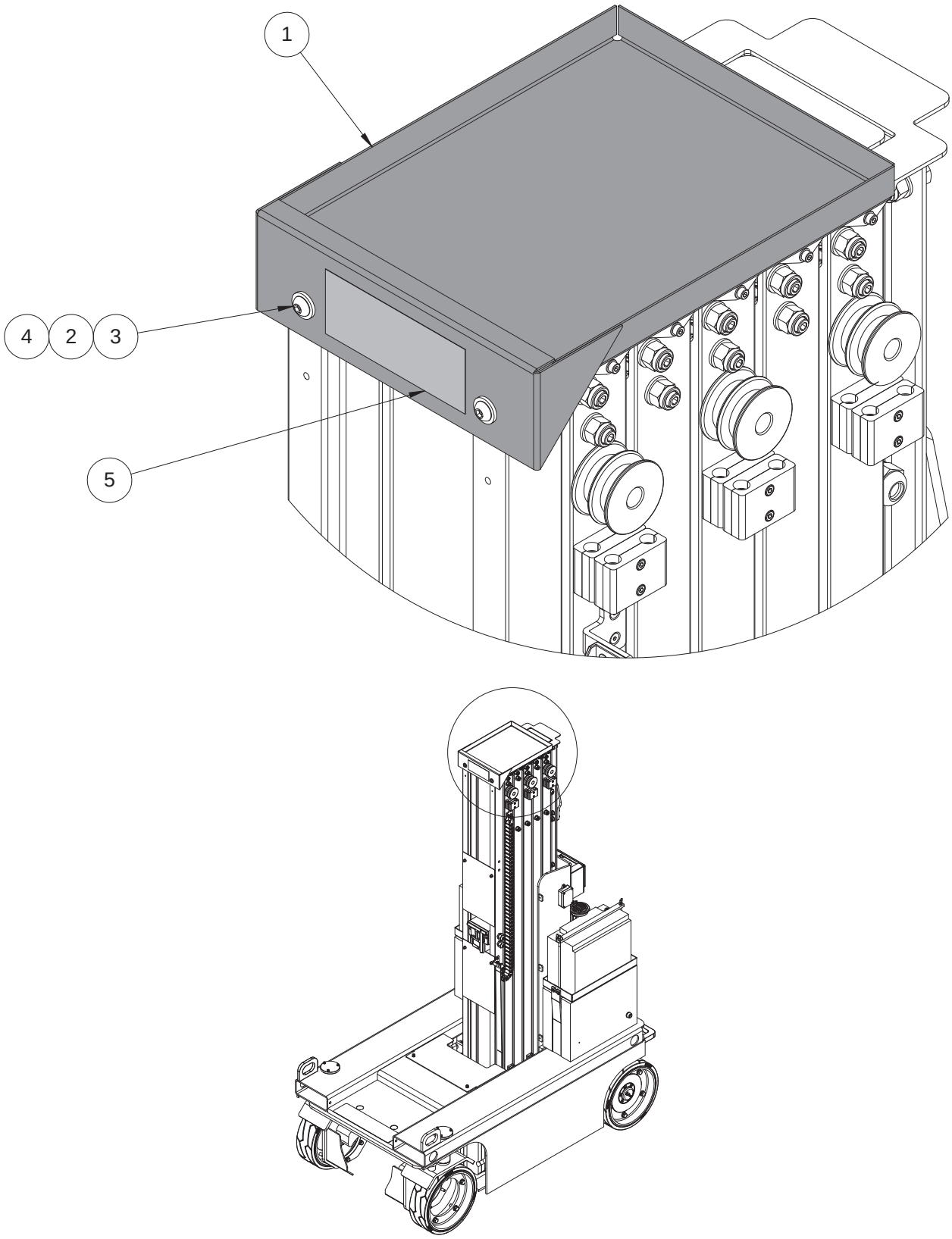

ILLUSTRATION No.
ART_5962

Mast Series

Option, Hardware Tool Tray

Item	Part Number	Description	Qty.
1	18559	Hardware Tool Tray Weldment	1
2	50001	WSHR M08 ZP Standard Flat	2
3	50124	BHCS M08-1.25X20	2
4	50048	NNYL M08X1.25 08 ZP Nylon	2
5	95707	Decal, MME Tool Tray	1

Material Tool Tray

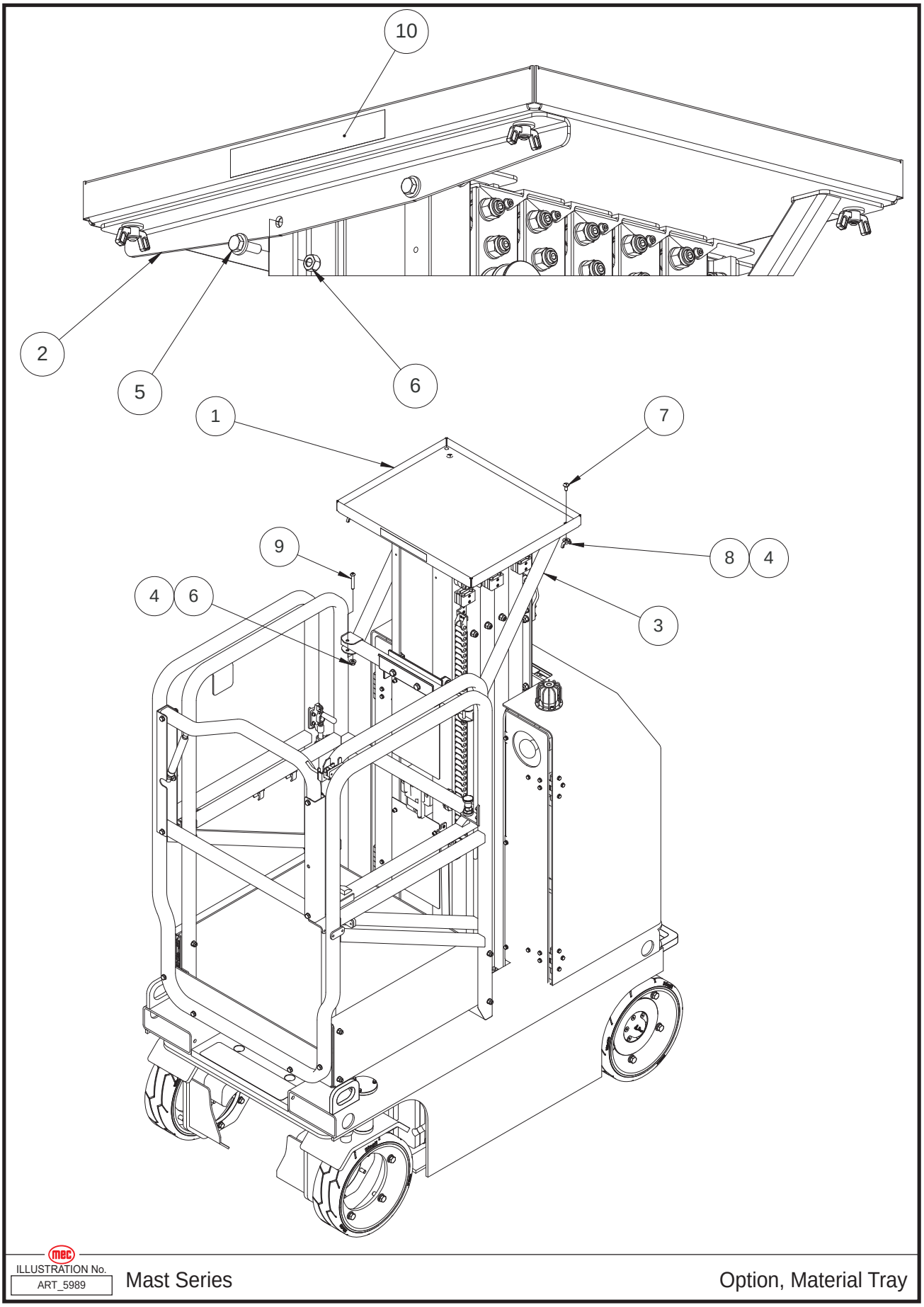

Item	Part Number	Description	Qty.
1	18584	Material Tray	1
2	18585	Material Tray Mount	1
3	18586	Material Tray Support Weldment	2
4	50001	WSHR M08 ZP Standard Flat	8
5	50031	HHCS M08-1.25X025 08 ZP F	2
6	50048	NNYL M08X1.25 08 ZP Nylon	4
7	53444	BHCS 5-16 X 3/4 ZP Carriage	4
8	53445	NNYL 5-16 ZP WINGNUT	4
9	53456	BHCS M08 X 50 BL OX	2
10	96162	Decal, MME Material Tool Tray	1

Decal Locations

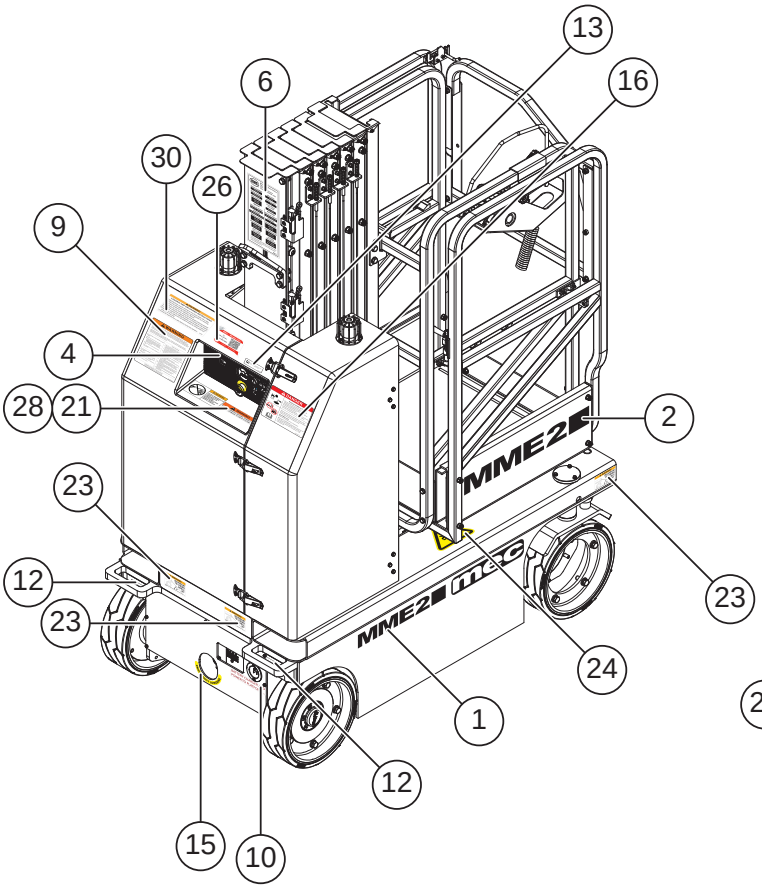

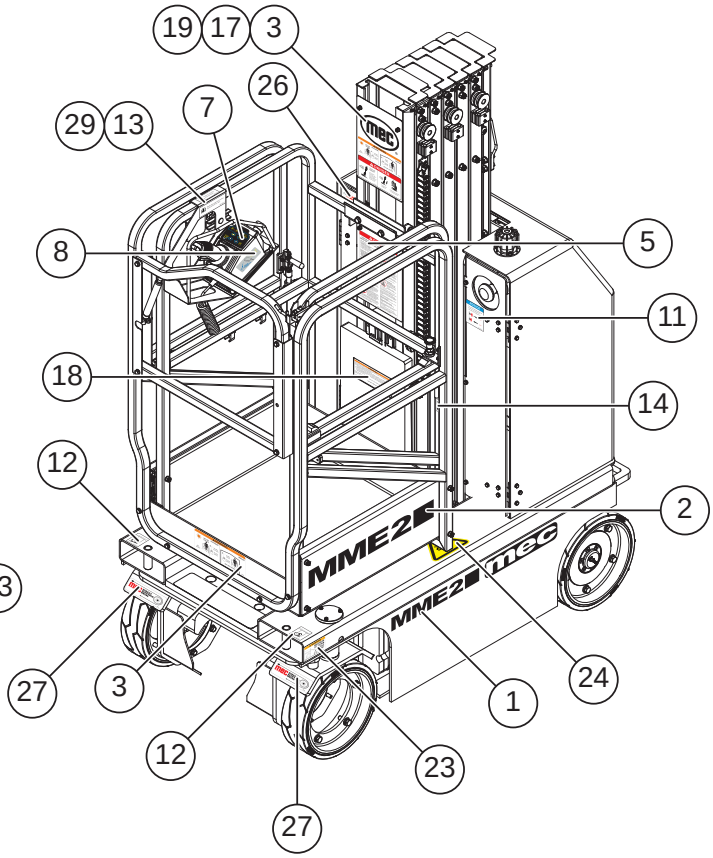

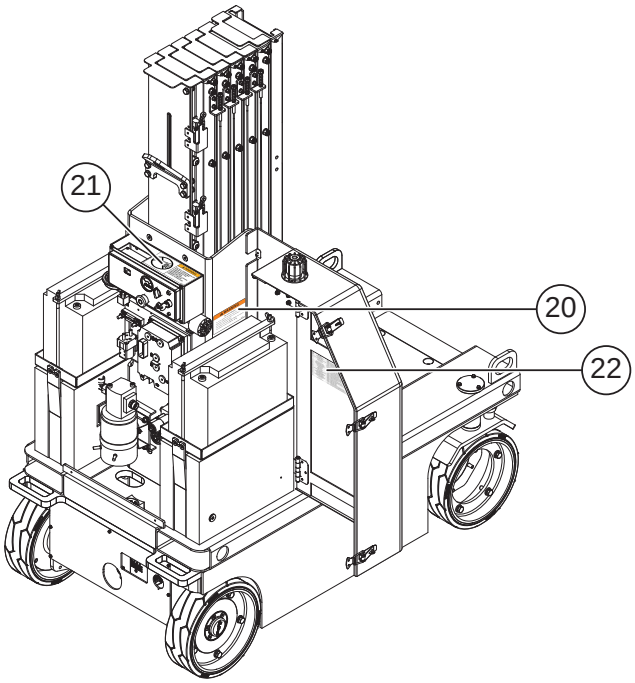

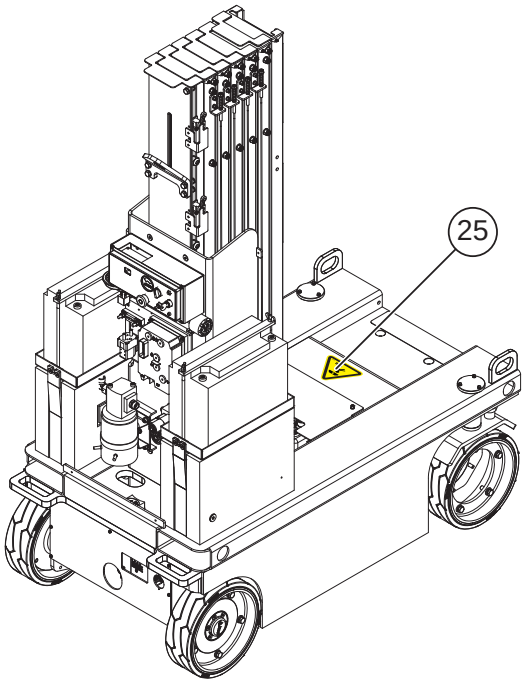

1 MME20 mec 95520 Qty. - 2	MME25 mec 95521 Qty. - 2	2 MME20 95517 Qty. - 2	MME25 95518 Qty. - 2	3 WARNING 95529 Qty. - 2
4 44338 Qty. - 1	5 DANGER 43885 Qty. - 1	6 95215 Qty. - 1	7 41632 Qty. - 1	8 DRIVE REVERSE/ LIFT UP DRIVE FORWARD/ LOWER 94528 Qty. - 1
9 WARNING 41649 Qty. - 1	10 BATTERY CHARGER AND POWER TO PLATFORM 94659 Qty. - 1	11 NOTICE Cut off the power when the machine is repaired or not used for long period. ON OFF 9311105 41637 Qty. - 1	12 9311015 41635 Qty. - 4	13 Refer the operator to the instructions for use. 9314013 41639 Qty. - 2
14 Restraint only 1 Occurrence 9414123UM 41648 Qty. - 1	15 EMERGENCY LOWERING 95819 Qty. - 1	16 DANGER Explosion/Burn Hazard 41641 Qty. - 1	17 DANGER Tip-over Hazard If tilt-alarm sounds, unit is on a severe slope. Death or serious injury could occur. 1.Lower the platform. 2.Move the machine to level surface. 44485 Qty. - 1	18 WARNING Upon deliveries of this machine through sale, rental, lease, or any other transfer of possession, the following shall be done: 1. The entity transferring possession has done so based on all available information regarding where, when and how this machine will be used and operated. 2. The entity accepting possession has been familiarized and trained as set forth by the manufacturer and in full compliance with all applicable codes, standards, regulations and laws. Failure to adhere to the above requirements may result in death, personal injury, or property damage. Operator's Manual inside this box. 8911 8911 Qty. - 1
19 mec 94115 Qty. - 1	20 WARNING Tip-over Hazard Do not use batteries that weigh less than the original equipment. Batteries are used as counterweight and are critical to machine stability. Each battery must weigh **100 lbs / 46 kg.** The batteries must weigh a minimum of **200 lbs / 91 kg.** 44844 44844 Qty. - 1	21 WARNING DO NOT POWERWASH OR SPRAY ELECTRONIC COMPONENTS OR CONNECTORS. MOISTURE MAY CAUSE DAMAGE AND/OR ERRATIC OPERATION 90732 90732 Qty. - 2	22 43879 Qty. - 1	23 WARNING MAXIMUM TIE-DOWN ANGLE 30° 30° 94362 94362 Qty. - 4
24 9910 Qty. - 2	25 91850 Qty. - 1	26 MEC - Model Info Text Mast Series to 1 (844) 483-4669 Manuals Brochures Warranty & More 95601 Qty. - 2	27 mec DIRECT ELECTRIC DRIVE 94423 94423 Qty. - 2	28 WARNING RELEASE BRAKES BEFORE TOWING TO PREVENT DAMAGE TO DRIVE SYSTEM 42534 42534 Qty. - 1
29 Platform controller normal position. 9314015 41640 Qty. - 1	30 WARNING LOADING AND UNLOADING INSTRUCTIONS 1) Mast Machines must be winched on and off any trailer with a ramp. 2) Follow the brake release instructions and preparation for a winching operation contained in the Operator's Manual. 3) If driving is the only choice, ensure the drive wheels are facing downhill. 4) Ensure the surface has adequate traction on all wheels for even braking. 5) Control the machine by walking alongside using the platform control unit. 6) Select slow drive speed and use extreme caution by driving slowly and smoothly on the ramp. 7) Control the machine from a safe distance during this operation. 96306 96306 Qty. - 1			

Notes

Notes

MEC Parts Order Form

Phone: 559-842-1523
Fax: 559-400-6723
Email: Parts@mecawp.com

Please Fill Out Completely:

Date: _____ **Ordered By:** _____
Account: _____ **Your Fax No.:** _____
Bill to: _____ **Ship to:** _____

Purchase Order Number _____ **Ship VIA** _____

*** All orders MUST have a Purchase Order Number* *****Fed Ex shipments require Fed Ex account number*

Part Number	Description	Quantity	Price

All back-ordered parts will be shipped when available via the same ship method as original order unless noted below:

_____ Ship complete order only - No Backorders
_____ Ship all available parts and contact customer on disposition of back-ordered parts
_____ Other (Please specify)

Signature _____

Limited Owner Warranty

MEC Aerial Platform Sales Corp. warrants its equipment to the original purchaser against defects in material and/or workmanship under normal use and service for one (1) year from date of registered sale or date the unit left the factory if not registered. MEC Aerial Platform Sales Corp. further warrants the structural weldments of the main frame and scissor arms to be free from defects in material or workmanship for five (5) years from date of registered sale or date unit left the factory if not registered. Excluded from such warranty is the battery(s) which carries a ninety (90) day warranty from described purchase date. Warranty claims within such warranty period shall be limited to repair or replacement, MEC Aerial Platform Sales Corp's option, of the defective part in question and labor to perform the necessary repair or replacement based on MEC Aerial Platform Sales Corp's then current flat rate, provided the defective part in question is shipped prepaid to MEC Aerial Platform Sales Corp. and is found upon inspection by MEC Aerial Platform Sales Corp. to be defective in material and/or workmanship. MEC Aerial Platform Sales Corp. shall not be liable for any consequential, incidental or contingent damages whatsoever. Use of other than factory authorized parts; misuse, improper maintenance, or modification of the equipment voids this warranty. The foregoing warranty is exclusive and in lieu of all other warranties, express or implied. All such other warranties, including implied warranties of merchantability and of fitness for a particular purpose, are hereby excluded. No Dealer, Sales Representative, or other person purporting to act on behalf of MEC Aerial Platform Sales Corp. is authorized to alter the terms of this warranty, or in any manner assume on behalf of MEC Aerial Platform Sales Corp. any liability or obligation which exceeds MEC Aerial Platform Sales Corp's obligations under this warranty.

MEC Aerial Work Platforms

1401 S. Madera Avenue, Kerman, CA 93630 USA
Toll Free: 1 - 877 - 632 - 5438
Phone: 1 - 559 - 842 - 1500
Fax: 1 - 559 - 842 - 1520
info@MECawp.com
www.MECawp.com