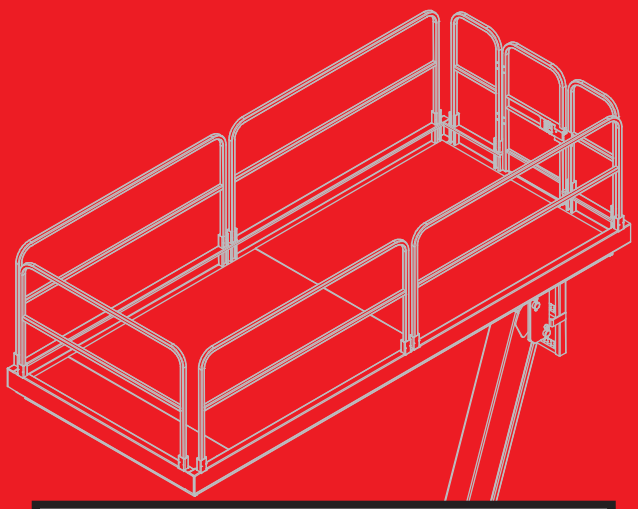

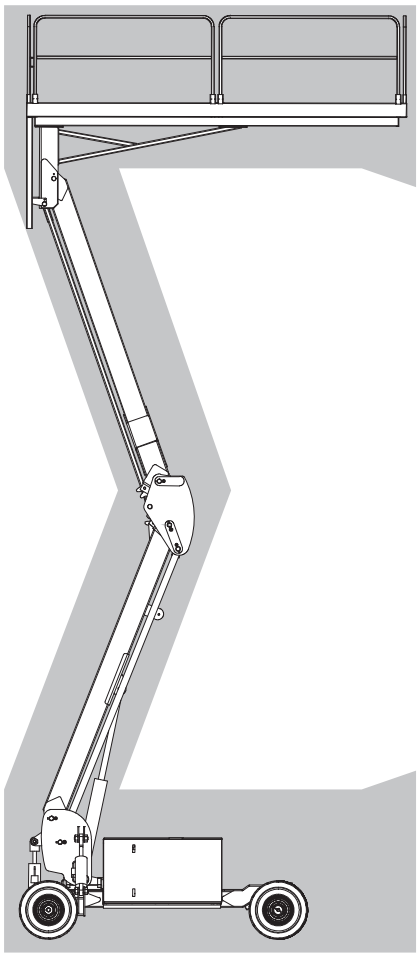

Speed Level™ Sigma Lift - ES Models

Serial Number
11700001 - up

91941
June 2016

Operator's Manual

CE/Australian Specifications

Specifications ..... **inside cover**
Introduction **1**
Safety **2**
- Safety Alert Symbols 3
- Fall Protection 3
- Electrocution Hazard 4
- Tip-over Hazards 6
- Fall Hazards 7
- Collision Hazards 7
- Additional Safety Hazards 8
- Battery Safety 8

Workplace Inspection **9**
Functions Test **9**
Operating Instructions **10**
- Prestart 10
- Base Controls Operation and Test 11
- Platform Controls Operation and Test 12
- Control Lever Operation 13
- Leveling Procedure 15
- Shutdown Procedure 15
- Deck Extension -- 2684 models only 16

Emergency Systems **17**
- Emergency Stop 17
- Emergency Lowering 17

Fold Down Platform Railings **18**
Machine Inspections **20**
- Pre-Start Inspection Checklist 21
- Annual Inspection Report 24

Maintenance **25**
- Routine Maintenance 26
- Scheduled Maintenance 26
- Support the Platform 26
- Lubrication 27

Battery Charger **28**
- Charge Batteries 29

Hybrid Generator Operation **30**
Component Locations **31**
- Full Machine 31
- Modules 32
- Upper Controls 33
- Lower Controls 34

Decals **35**
Troubleshooting **37**
Serial Plate **38**
Transport and Lifting Instructions. **39**
- Loading 39
- Disengage Brakes before Towing or Winching 39
- Engage Brakes before Driving 39
- Lifting and Tie Down Instructions 41

—Specifications—

		2684ES		3084ES	
Working Height*		32 ft*	10.0 m*	36 ft*	11.0 m*
Platform Height		26 ft	7.9 m	30 ft	9.0 m
Stowed Height	Rails Up	107 in	2.72 m	105 in	2.67 m
	Rails Folded Down	72 in	1.83 m	70 in	1.78 m
Maximum Occupants	0 m/s wind	5		5	
	45 km/h (12.5 m/s) wind	5		5	
	On Slide-Out Extension	2		N/A	
Lift Capacity		1700 lbs	770 kg	1500 lbs	680 kg
Slide-Out Deck Capacity		700 lbs	320 kg	N/A	
Platform Dimensions	Length (inside rails)	12 ft 2 in	3.71 m	14 ft	4.27 m
	Length (platform extended)	16 ft 2 in	4.93 m	N/A	
	Platform Width (inside rails)	72 in	1.83 m	72 in	1.83 m
	Guardrail Height	43.5 in	1.1 m	43.5 in	1.1 m
	Toeboard Height	6 in	15 cm	6 in	15 cm
Overall Length		13 ft 2 in	4.0 m	14 ft 6 in	4.4 m
Overall Width		84 in	2.13 m		
Wheel Base		100 in	2.54 m		
Wheel Track		72 in	1.83 m		
Turning Radius	Inside	8 ft	2.44 m		
	Outside	16 ft 8 in	5.08 m		
Ground Clearance		10 in	25 cm		
Machine Weight** (Unloaded)(Approximate)		8400 lb**	3810 kg**	8700 lb**	3946 kg**
Drive System (Proportional)					
	Drive Speed - Platform elevated	0-.4 mph	0-.65 km/h max†		
	Drive Speed - Platform Lowered	0-4 mph	0-6.4 km/h		
Lift/Lower Speeds (Approximate)		35 sec/40 sec			
Gradeability		40%	22°		
Ground Pressure/Wheel (Maximum)		98 psi	6.9 kg/cm²	101 psi	7.1 kg/cm²
Wheel Load		3065 lb	1390 kg	3175 lb	1440 kg
Wind Speed (Maximum)		28 mph		45 km/h (12.5 m/s)	
Tire Size - Standard		26 x 12D / 380NHS			
Tire Pressure		45 psi	3.1 bar		
		Foam-filled tires are standard in Europe and Australia, optional in North America			
Wheel Lug Nut Torque		75-85 ft/lb	102-115 Nm		
Hydraulic Pressure	Main System	2800 psi	193 bar		
	Lift System	2800 psi	193 bar		
	Steering System	2000 psi	138 bar		
Hydraulic Fluid Capacity		23 gallon	87 liters		
Electric Motor		8 hp (6kW): 3600 rpm			
Power Source -- Voltage		48 volts DC			
Batteries		Eight 6-volt DC 370 amp-hour industrial deep cycle batteries			
Battery Charger	Input	120 Volt AC, 50.60 Hz, 18 Amp - 240 Volt AC, 50.60 Hz, 9 Amp			
	Output	48 Volt DC, 32 Amp, 1500 W, Timed Shutoff			
Maximum Vibration		does not exceed 2.5 m/sec^2 at operator's position			
Sound Pressure At Workstation		80 dB(A)			
Ambient Operating Range		-30° C minimum; 50° C maximum			
Operating Inclination		Manual and self-leveling, side/side to 14°, fore/aft to 10°			
Brakes		Dual Rear Wheel Multi-disc			

Meets requirements of CE EN280:2013 and Australian Standard AS1418.10(Int)--2004 Part 10: Elevated Work Platforms. Speed Level™ is a trademark of MEC. *Working Height adds 6 feet (2 m) to platform height. **Weight may increase with certain options or country standards. †Drive speed while elevated is inversely proportional to platform height; the higher the platform is, the lower the maximum elevated drive speed. The machine is driveable at full height. Total vibration value to which the hand/arm system is subjected does not exceed 2.5 m/sec^2.
Highest root mean square value of weighted acceleration to which the whole body is subjected does not exceed 0.5 m/sec^2.

Introduction

This Operator's Manual has been designed to provide you with the instructions and operating procedures essential to properly and safely operate your MEC Aerial Work Platform for its intended purpose of positioning personnel, along with their necessary tools and materials, to overhead work locations.

DANGER

The Operator's Manual must be read and understood prior to operating your MEC Aerial Work Platform. The user/operator should not accept operating responsibility until he/she has read and understands the operator's manual as well as having operated the MEC Aerial Work Platform under supervision of an authorized, trained and qualified operator.

It is essential that the operator of the aerial work platform is not alone on the workplace during operation.

Modifications of this machine from the original design and specifications without written permission from MEC are strictly forbidden. A modification may compromise the safety of the machine, subjecting operator(s) to serious injury or death.

Your MEC Aerial Work Platform has been designed, built, and tested to provide safe, dependable service. Only authorized, trained and qualified personnel should be allowed to operate or service the machine.

MEC, as manufacturer, has no direct control over machine application and operation. Proper safety practices are the responsibility of the user and all operating personnel.

Use of this machine in Europe must comply with CE standard EN280:2001 + A1 and applicable government regulations. Use in Australia must comply with Australian Standard AS1418.10(Int)--2004 Part 10.

Use only MEC-approved replacements parts in the repair and maintenance of this machine.

If there is a question on application and/or operation contact:

MEC Aerial Work Platforms
1401 S. Madera Avenue, Kerman, CA 93630 USA
Toll Free: 1 - 877 - 632 - 5438
Phone: 1 - 559 - 842 - 1500
Fax: 1 - 559 - 842 - 1520
info@MECawp.com
www.MECawp.com

Safety

DO NOT operate this machine until you have read and understood this manual, have performed the Pre-Start Inspection, Routine Maintenance, and Functions Test, have inspected the workplace for hazards, and have learned the operating procedures for this machine.

Failure to read, understand and follow all safety rules, warnings, and instructions will unnecessarily expose you and others to dangerous situations. For your safety and the safety of those around you, you must operate your machine as instructed in this manual.

MEC designs aerial work platforms to be safe and reliable. They are intended to position personnel, along with their necessary tools and materials, to overhead work locations. The owner/user/operator of the machine should not accept responsibility for the operation of the machine unless properly trained.

Never perform work or inspection on the machine with the platform elevated without first supporting the elevating assembly (see *Support the Platform* on page 26).

Safety Alert Symbols

MEC manuals and decals use symbols and colors to help you recognize important safety, operation and maintenance information.

DANGER

RED – Indicates an imminently hazardous situation which, if not avoided, will result in death or serious injury.

WARNING

ORANGE – Indicates a potentially hazardous situation which, if not avoided, could result in death or serious injury.

CAUTION

YELLOW with alert symbol – Indicates a potentially hazardous situation which, if not avoided, may result in minor or moderate injury.

CAUTION

YELLOW without alert symbol – Indicates a potentially hazardous situation which, if not avoided, may result in property damage.

Fall Protection

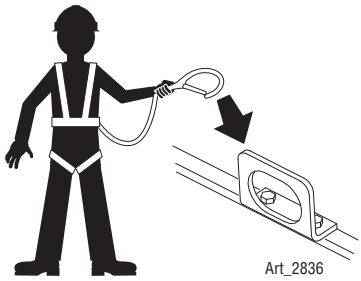

Operators must comply with employer, job site and governmental rules regarding the use of personal protective equipment.

If required by your employer or job site, use personal fall protection equipment (PFPE) when operating this machine.

All PFPE must comply with applicable governmental regulations, and must be inspected and used in accordance with the PFPE manufacturer's instructions.

ALWAYS wear an approved fall protection properly attached to a designated anchorage point when driving or operating the machine. Attach only one fall restraint to each anchorage point.

Electrocution Hazard

DANGER

ELECTROCUTION HAZARD!!! THIS MACHINE IS NOT INSULATED!

DEATH OR SERIOUS INJURY will result from contact with or inadequate clearance from any electrically charged conductor.

You must maintain a CLEARANCE OF AT LEAST 10 FEET (3.05 m) between any part of the machine, or its load, and any electrical line or apparatus carrying over 300 Volts up to 50,000 Volts. One foot (30.5 cm) additional clearance is required for every additional 30,000 Volts.

Observe Minimum Safe Approach Distance.

ART_3070

ART_3060

DO NOT work in close proximity to, or in contact with, energized power lines and electrical equipment. This machine is not insulated and WILL NOT protect the operator from injury or the machine from damage.

Refer to the following diagram and all applicable governmental regulations for the minimum safe distances from energized power lines and electrical equipment.

DO NOT touch the machine if it contacts energized power lines.

Personnel in the platform:

- Move away from the platform rails,
- DO NOT attempt to operate the machine, and
- DO NOT touch any part of the machine until energized power lines are shut off.

Personnel on the ground:

- DO NOT approach the machine and
- DO NOT touch or attempt to operate the machine until energized power lines are turned off.

Do not operate the machine during electrical storms or lightning.

DO NOT use the machine as a ground for welding unless properly equipped with a weld line to platform option.

Minimum Save Approach Distance

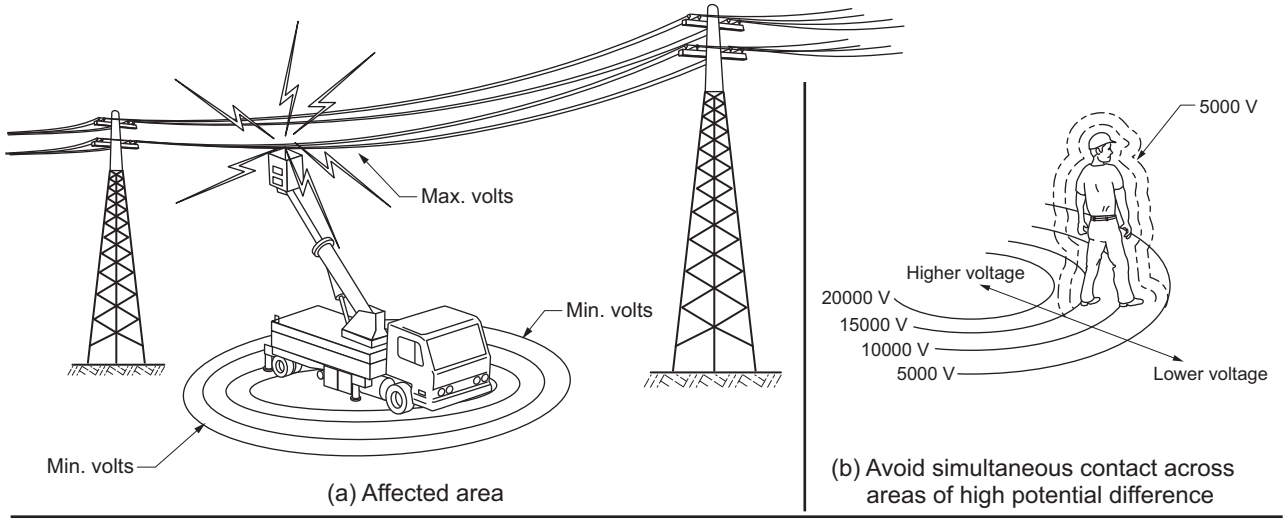

(a) Affected area

(b) Avoid simultaneous contact across areas of high potential difference

CLEARANCES FROM LIVE AERIAL CONDUCTORS

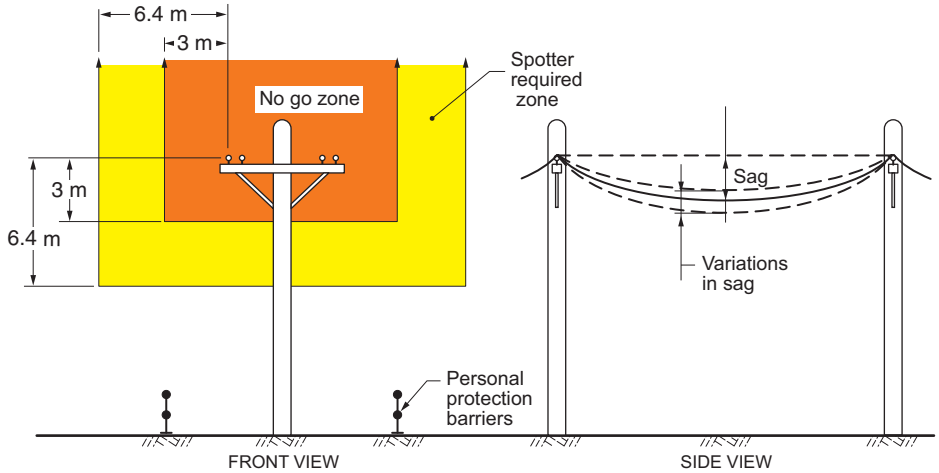

(a) Distribution lines up to and including 133 kV

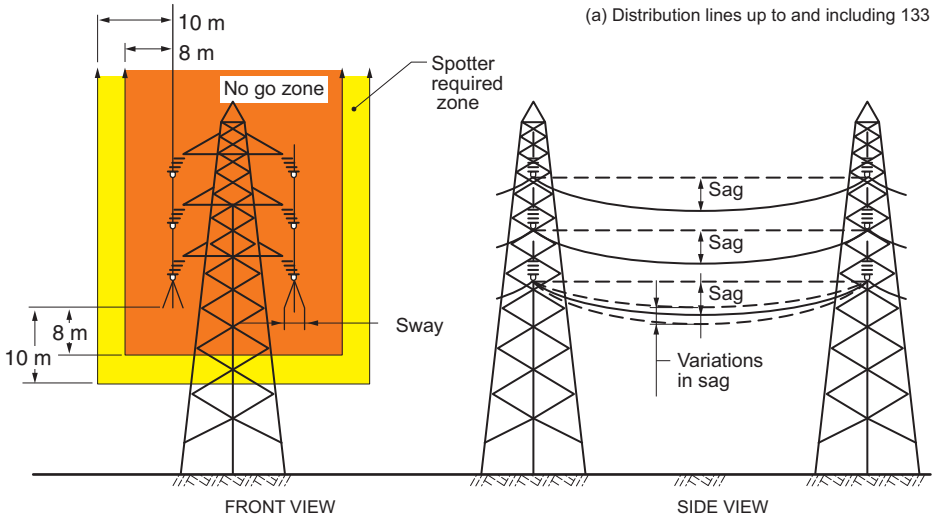

(b) Transmission lines greater than 133 kV

LEGEND

- = No shading, in the front views, indicates no proximity requirements
- = Light shading indicates spotter is required
- = Heavy shading indicates the NO GO ZONE

ART_3265

Tip-over Hazards

ART_3065
DO NOT OVERLOAD

DO NOT exceed the maximum platform capacity (see Specifications). The weight of options and accessories will reduce the rated platform capacity and must be factored into the total platform load. Refer to the decals on the options.

DO NOT elevate the platform when the machine is on a surface that is soft, non-planar, or exceeds the leveling range of the machine.

The tilt alarm will sound when the machine is off level. If the alarm sounds when the platform is lowered, DO NOT attempt to elevate the platform. Carefully lower, re-level the machine, or move the machine to a surface within the leveling range.

STOP if the alarm sounds and the red light illuminates when the platform is raised. Use extreme caution to lower the platform.

ART_3064
DO NOT ELEVATE OR DRIVE ELEVATED ON A SURFACE THAT EXCEEDS THE LEVELING RANGE

Driving: DO NOT drive the machine on a slope that exceeds the maximum uphill or downhill slope rating. Slope rating applies to machines in the stowed position.

Driving in stowed position: use extreme care and reduce speed when driving across uneven terrain, debris, unstable or slippery surfaces, and near holes or drop-offs.

Driving with the platform elevated: DO NOT drive on or near uneven terrain, unstable surfaces, curbs, drop-offs or other hazardous conditions.

ART_3063
DO NOT DRIVE ELEVATED ON IRREGULAR OR UNSTABLE SURFACE

DO NOT push off or pull toward any object outside the platform.

Maximum Allowable Side Force

CE and AUS
90 lbs (400 N)

DO NOT elevate the platform when wind speeds are in excess of 28 m.p.h. (12.5 m/s). If wind speeds exceed 28 m.p.h. (12.5 m/s) when the platform is elevated, carefully lower the platform and discontinue operation.

DO NOT increase the surface area of the platform (i.e. cover the rails with tarp or plywood). Increased surface area exposed to the wind will decrease machine stability.

ART_3069
DO NOT PUSH OR PULL OBJECTS OUTSIDE PLATFORM

DO NOT attach overhanging loads or use the machine as a crane.

NEVER transport tools and materials unless they are firmly secured. Secure all tools and loose materials.

NEVER alter or disable any machine components.

NEVER replace any part of the machine with items of different weight or specification.

NEVER modify or alter the work platform without written permission from MEC.

NEVER place ladders or scaffolds in the platform or against any part of the machine.

NEVER use the machine on a moving or mobile surface or vehicle.

ART_3071
DO NOT ELEVATE IN WINDY CONDITIONS

Ensure that all tires are in good condition and lug nuts are properly torqued.

ART_3059
DO NOT USE AS CRANE

Fall Hazards

ART_3067
DO NOT CLIMB ON RAILS

ART_3058
DO NOT EXIT PLATFORM WHEN ELEVATED

DO NOT sit, stand or climb on the platform guard rails. Maintain a firm footing on the platform floor at all times.

DO NOT exit the platform when elevated

Keep the platform floor clear of debris.

DO NOT fasten a fall restraint lanyard to an adjacent structure.

Ensure that all gates are properly closed and secured before operating the machine.

Operators must comply with employer and job site rules and governmental regulations regarding the use of personal protective equipment.

Collision Hazards

ART_3072

ART_3062

ART_3066

ART_3481

Check path before moving for equipment, materials or other obstructions.

Check path before moving for overhead obstructions.

Check path before moving for crushing hazards when holding the platform rail.

Reduce travel speed when moving the machine on slopes, when near personnel and obstacles, or when surface conditions are wet, slippery or otherwise limiting.

DO NOT operate in the path of any crane unless the controls of the crane have been locked out and/or precautions have been taken to prevent any possible collision.

Stunt driving and horseplay are PROHIBITTED.

Watch for personnel and obstructions below the platform when lowering the platform.

Additional Safety Hazards

Explosion and Fire Hazards

DO NOT operate the machine in hazardous locations or locations where potentially flammable or explosive gasses or particles may be present.

Damaged Machine Hazards

Conduct a thorough pre-start inspection of the machine and test all functions before each work shift to check for damage, malfunction and unauthorized modification. Tag and remove a damaged, malfunctioning or modified machine from service. DO NOT use a damaged, malfunctioning or modified machine.

Routine maintenance must be performed by the operator before each work shift. Scheduled maintenance must be performed by a qualified service technician at scheduled intervals. Tag and remove from service any machine that has not had scheduled preventative maintenance performed.

Check that all safety and instructional decals are in place and undamaged.

Check that the operator's, safety and responsibilities manuals are present in the storage container located in the platform. All manuals must be complete, undamaged and readable.

Bodily Injury Hazards

DO NOT operate the machine when there is a hydraulic fluid or air leak. Hydraulic fluid or air under pressure can penetrate and/or burn skin.

All compartments must remain closed and secure during machine operation. Improper contact with components under any cover will cause serious injury. Only trained maintenance personnel should access compartments. The operator should only access a compartment when performing pre-operation inspection.

Weld Line to Platform Safety (if equipped)

Read, understand and follow all warnings and instructions provided with the welding power unit.

DO NOT connect weld leads or cables unless the welding power unit is turned off at the platform controls.

DO NOT operate unless the weld cables are properly connected.

Battery Safety

Burn Hazards

Batteries contain acid. Always wear protective clothing and eye wear when working with batteries.

Avoid spilling or contacting battery acid. Neutralize battery acid spills with baking soda and water.

Explosion Hazard

Keep sparks, flame and lighted tobacco away from batteries. Batteries emit explosive gas.

Electrocution Hazard

Avoid contact with electrical terminals.

Workplace Inspection

DO NOT operate this machine until you have read and understood this manual, have performed the Pre-Start Inspection, Routine Maintenance, and Functions Test, have inspected the workplace for hazards, and have learned the operating procedures for this machine.

Inspect the workplace and determine whether the workplace is suitable for safe machine operation. Do this before moving the machine to the workplace.

Be sure the lift is the correct machine for the job.

Be aware of workplace conditions, and continue to watch for hazards while operating the machine.

Workplace Inspection

Check the workplace for all possible hazards, including but not limited to:

- drop-offs or holes, including those concealed by water, ice, mud, etc.
- sloped, unstable or slippery surfaces
- bumps, surface obstructions and debris
- overhead obstructions and electrical conductors
- other objects or equipment
- hazardous locations and atmospheres
- inadequate surface and support to withstand all load forces imposed by the machine
- wind and weather conditions
- the presence of unauthorized personnel
- other possible unsafe conditions

Functions Test

DO NOT operate this machine until you have read and understood this manual, have performed the Pre-Start Inspection, Routine Maintenance, and Functions Test, have inspected the workplace for hazards, and have learned the operating procedures for this machine.

The operator must conduct a Functions Test of the machine before each work shift to check that all machine systems are working properly.

Test the machine on a firm level surface with no debris, drop-offs, potholes or overhead obstructions. Perform each test outlined in *Operating Instructions* before using the machine.

DO NOT use a machine that is malfunctioning. If any function does not perform as described, tag the machine and remove for repair by a qualified service technician. After repairs are completed, a Pre-Start Inspection and Functions Test must be performed before using the machine.

Operating Instructions

DO NOT operate this machine until you have read and understood this manual, have performed the Pre-Start Inspection, Routine Maintenance, and Functions Test, have inspected the workplace for hazards, and have learned the operating procedures for this machine.

This section provides instructions for each function of machine operation. Follow all safety rules and instructions.

This machine may be operated by trained and authorized personnel only. If multiple operators use this machine, all must be qualified and authorized to use it. New operators must perform a Pre-Start Inspection (see page 21) and Functions Test prior to operating the machine.

Operators must comply with employer, job site and governmental rules regarding the use of personal protective equipment – see "Fall Protection" on page 3.

Prestart

- Perform *Prestart Inspection* (see *page 21).*
- Check base control EMERGENCY STOP switch – turn clockwise to reset.

ART_3253

- Check platform control EMERGENCY STOP switch – turn clockwise to reset.

ART_3257

- Check Battery Disconnect switch in control module next to lower control box. Must be in ON position.

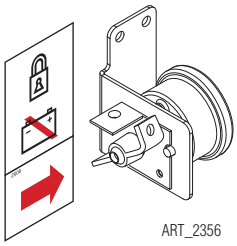
ART_2356

- Check Charge Indicator on base control panel. Battery pack should be fully charged.

  Note: If machine fails to operate, check the Diagnostic LED on the motor control processor inside the control module – see "Component Locations" on page 31.

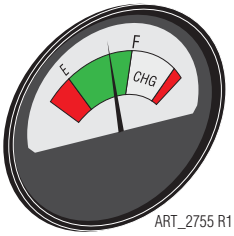

ART_2755 R1

Base Controls Operation and Test

IMPORTANT—Be sure the area above the machine is clear of obstructions to allow full elevation of platform.

Select BASE Operation

ART_3250

- Turn the selector switch to BASE.

Emergency Stop

ART_3253

- Press the EMERGENCY STOP switch at any time to stop all machine functions.
- Turn switch *clockwise* to reset.

DANGER

Do not elevate the platform if the machine is not on a firm level surface.

Elevate Platform

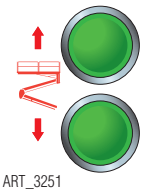
ART_3251

- Press and hold the RAISE button on the base control panel to elevate the platform.

Test Operation

- Elevate to maximum height.
- Releasing the button will stop elevation.
- Pressing the EMERGENCY STOP switch will stop elevation.

Lower Platform

- Press the LOWER button. Release when the desired platform height is reached.

Test Operation

- Lower the platform to the stowed position.
- Releasing the button will stop descent.
- Pressing the EMERGENCY STOP switch will stop descent.

Platform Controls Operation and Test

IMPORTANT—Check that the route of travel to be taken is clear of persons, obstructions, debris, holes, and drop offs, and is capable of supporting the machine.

ART_3254

Select PLATFORM Operation

Lower Control Box: Turn the selector switch to PLATFORM.

- Turn the selector switch to PLATFORM.

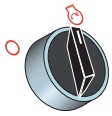
ART_3255

Operate from Platform

- Enter the platform and secure the entry.
- Turn the platform selector switch to the ON position.

ART_3256

- Press the horn button t verify proper operation (optional).

ART_3257

Emergency Stop

- Press the EMERGENCY STOP switch at any time to stop all machine functions.
- Turn switch *clockwise* to reset.

WARNING

Activation of the EMERGENCY STOP switch will apply brakes immediately. This may cause unexpected platform movement as the machine comes to a sudden stop. Brace yourself and secure objects on the platform during operation of machine.

ART_2519

Platform Overload Indicator

The Platform Overload Indicator will light and the platform will not lift when the sensor detects too much weight on the platform. Refer to the platform capacity labels and adjust the platform load accordingly.

Control Lever Operation

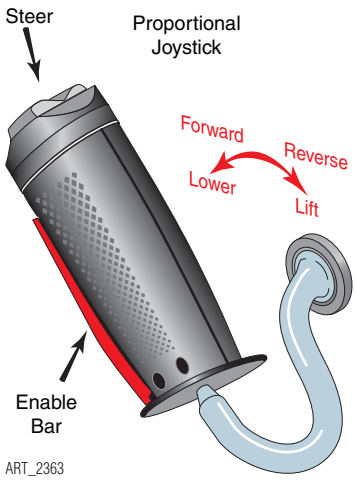

ART_2363

- Function speed is proportional and is controlled by the movement of the control lever.
- The further it is moved forward, the faster the speed will be.
- The control lever returns to the neutral (center) position when released.

WARNING

Do not elevate platform unless guardrails are installed and secure – see "Fold Down Platform Railings" on page 18.

If the platform fails to lower DO NOT attempt to climb down the elevating assembly. Serious injury may result – see "Emergency Systems" on page 17.

Elevate Platform

ART_3259

- Place the MODE SELECT switch in the LIFT position.
- Squeeze the enable bar and move the control lever toward you.

Test Operation

- Rate of lift is proportional and is dependent on the movement of the control lever.
- Elevate to maximum height.
- Releasing the enable bar or the control lever will stop elevation.
- Pressing the EMERGENCY STOP switch will stop elevation.

Lower Platform

ART_3259

- Place the MODE SELECT switch in the LIFT position.
- Move the control lever away from you.

Test Operation

- Rate of descent is fixed - platform lowers at same rate regardless of handle position.
- Pressing the EMERGENCY STOP switch will stop descent.

WARNING

Check that the route is clear of persons, obstructions, debris, holes and drop -offs, and is capable if supporting the machine.

IMPORTANT—Always check front steer wheel direction before driving.

Steering

ART_3258

- Place the MODE SELECT switch in the DRIVE position.
- Squeeze the Enable Bar.
- Press the Steering Switch with your thumb to steer left or right.

Test Operation

- Releasing the Enable Bar or Steering Switch will stop steering function.
- The steer wheels do not automatically center after a turn. The steer wheels must be returned to the straight-ahead position with the steering switch.

Drive Torque (Speed Control)

ART_3260

Drive speed is selectable until the platform is elevated above 10 Feet (3 m). When the platform is elevated the machine defaults to MID RANGE and the switch is locked-out (non functioning).

- HIGH SPEED: allows speeds up to 3 m.p.h. (4.8 km/h).
- MID RANGE: allows speeds up to 0.4 m.p.h. (0.6 km/h).
- HIGH TORQUE: use to drive up or down a slope that is too steep for normal speed.

Drive Forward

ART_3258

- Place the MODE SELECT switch in the DRIVE position.
- Squeeze the enable bar and move the control lever away from you.

Test Operation

- Drive speed is proportional and is dependent on the movement of the control lever.
- Releasing the enable bar or returning the control lever to the center position will stop drive.
- Pressing the EMERGENCY STOP switch will stop drive.

Drive Reverse

ART_3258

- Place the MODE SELECT switch in the DRIVE position.
- Squeeze the enable bar and move the control lever toward you.

Test Operation

- Drive speed is proportional and is dependent on the movement of the control lever.
- Releasing the enable bar or returning the control lever to the center position will stop drive.
- Pressing the EMERGENCY STOP switch will stop drive.

Brake

- For parking, the brake is automatically applied when the control lever is positioned in the neutral (center) position.

Leveling Procedure

Leveling of the machine can only be performed when the platform height is below the Stowed Height Limit Switch setting of approximately 10 feet (3 m).

When operating on a sloped surface, the platform can be brought to level using the AUTO LEVEL switch or the MANUAL LEVEL switches.

WARNING

Do Not drive elevated across uneven terrain (see Tip-over Hazards on page 6).

Note: The platform will not elevate unless it is level.

Auto Level

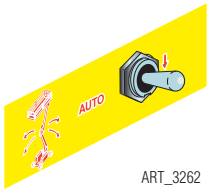

ART_3262

- Move the toggle switch *DOWN* to start leveling.
- Hold the toggle switch *DOWN* until leveling operation is complete.
    - When the platform reaches the level position, the TILT light will turn *OFF* and the machine will stop correcting.

Manual Level: Front to Rear

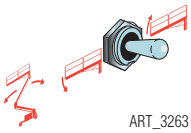
ART_3263

- **Tilt to Front:** Move and hold the toggle switch to the *LEFT* to tilt the platform to the desired position.
- **Tilt to Rear:** Move and hold the toggle switch to the *RIGHT* to tilt the platform to the desired position.

Manual Level: Side to Side

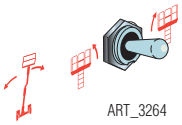
ART_3264

- **Tilt to Left:** Move and hold the toggle switch to the *LEFT* to tilt the platform to the desired position.
- **Tilt to Right:** Move and hold the toggle switch to the *RIGHT* to tilt the platform to the desired position.

Shutdown Procedure

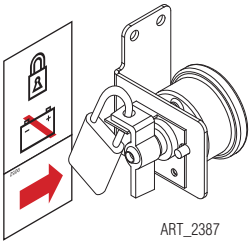
ART_2387

- When finished with the machine, place the platform in the stowed position.
- Park the machine on a level surface.
- Turn the platform controls selector switch to the OFF position.
- Carefully exit the platform using a constant three (3) point dismount/grip.
- Turn the key switch to the OFF position and remove the key to prevent unauthorized use.
- Turn the battery disconnect switch to the OFF position.

  Note: Leaving the battery disconnect switch in the ON position for an extended time will drain the battery. Always put the switch in OFF position when leaving the machine at the end of the work day.
- Put a padlock on the battery disconnect switch to prevent unauthorized operation.

Deck Extension -- 2684 models only

The deck will extend in intervals of 8 inches (20 cm) throughout the entire 48 inch (1.2m) length of the deck extension. The extension handle hangs from the top rail at the left side of the deck extension. The handle is used to push or pull the deck extension to the desired position.

To extend or retract the deck:

- Lift the handle to release the spring-loaded pin from the locked position.
- Push to extend or pull to retract the deck extension.
- Lower the handle enough for the spring-loaded pin to engage and continue to push or pull the deck extension until the pin locks into position.

Do not stand on the deck extension while extending or retracting it.

Check that the deck extension is locked in place before using the machine or transporting the machine by vehicle.

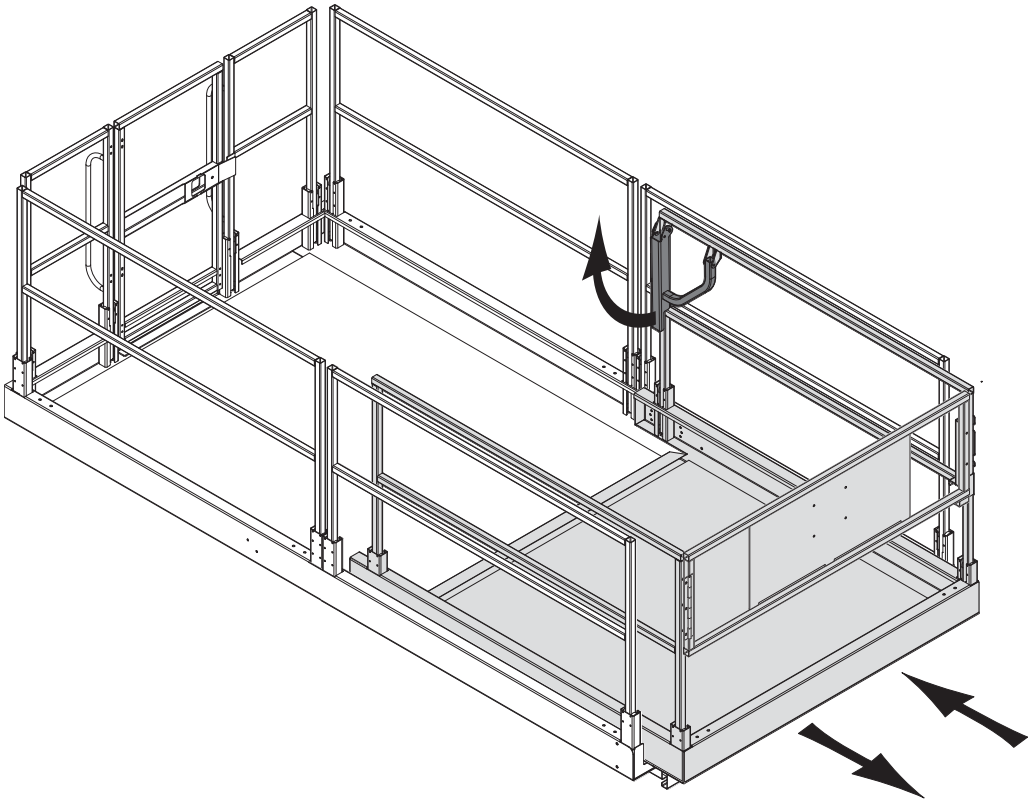

Emergency Systems

WARNING

If the control system fails while the platform is elevated, have an experienced operator use the emergency lowering procedure to safely lower the platform.

Do not attempt to climb down elevating assembly.

Emergency Stop

The machine is equipped with an EMERGENCY STOP switch on both control panels.

- Press the EMERGENCY STOP switch at any time to stop all machine functions.
- Turn switch *clockwise* to reset.

Selector Switch set to PLATFORM

- Either switch will stop all machine functions.
- Both switches must be reset or machine will not operate.

Selector Switch is set to BASE

- The upper controls are locked out.
- The lower switch must be reset or the machine will not operate.
- The machine will operate from the lower controls if the upper controls switch is tripped.

Emergency Lowering

The Emergency Lowering System is used to lower the platform in case of power or valve failure. The Emergency Lowering switch will function if the EMERGENCY STOP switch is tripped.

To lower the platform, perform the following steps:

- Push and hold the toggle switch down to lower the platform.
- Once the platform is fully lowered, release the toggle switch.

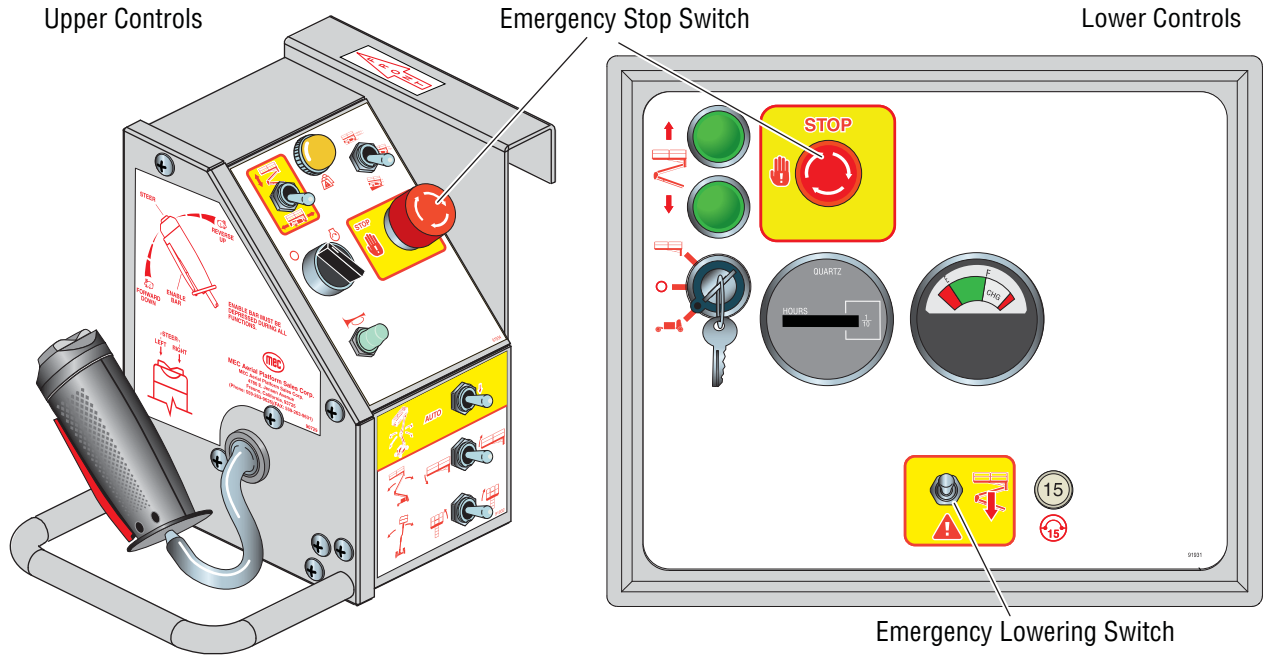

ART_3243

Fold Down Platform Railings

3084 Models

1 Open & Secure the Loading Gate

- Remove the 2 snap pins that hold the loading gate to the side guardrail.
- Swing the loading gate open
- Secure the gate to the side guardrail using one of the snap pins.
- Return the other snap pin to its place.

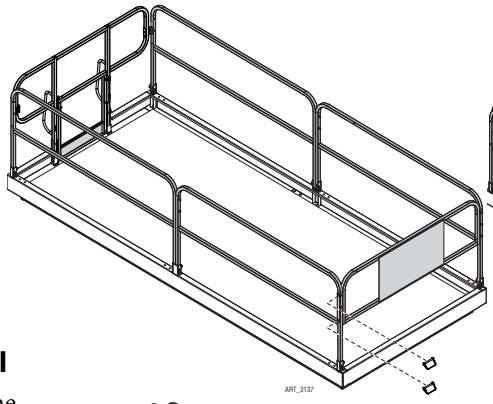

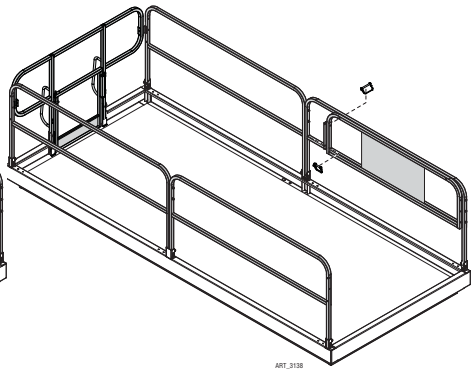

2 Release & Lower the Entry Rail

- Remove the 2 snap pins from the top corners of the entry guardrail.
- Remove the 2 snap pins from the base of the entry guardrail.
- Lower the entry guardrail to the platform floor.
- Return the snap pins to their places.

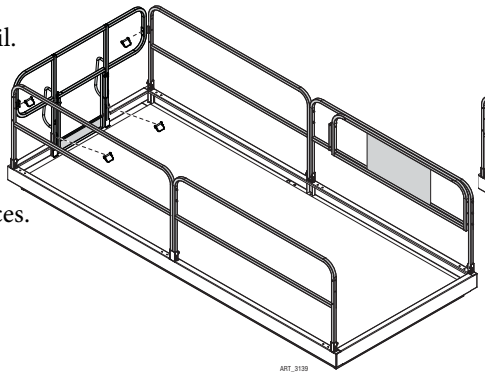

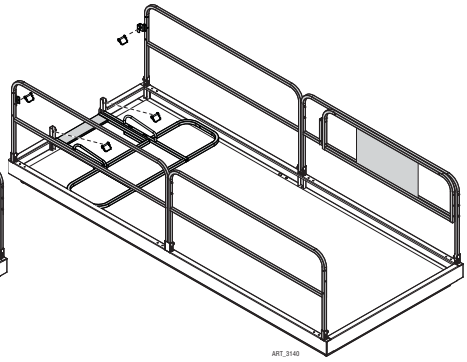

3 Release & Lower Left Side Rail

- Remove the 3 snap pins from the base the guardrail with the loading gate.
- Lower the guardrail and loading gate to the platform floor.
- Return the snap pins to their places.

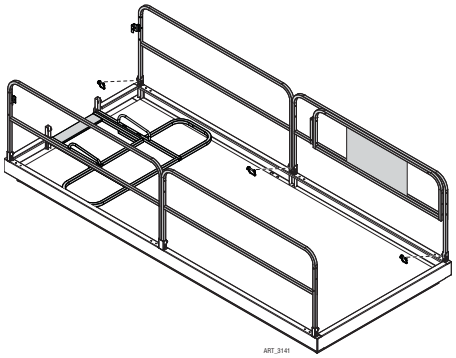

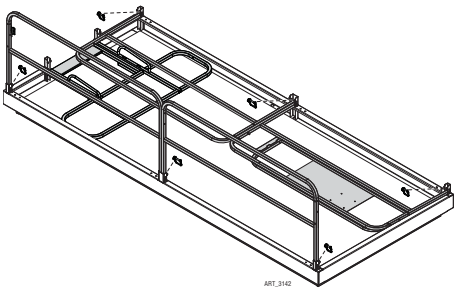

4 Release & Lower Right Side Rail

- Remove the 3 snap pins from the base of the right side guardrail.
- Lower the guardrail to the platform floor.
- Return the snap pins to their places.

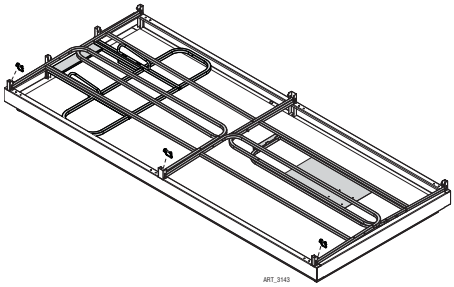

To return the machine to normal operation mode:

- Lift all rails into their upright position, then push down to secure them in their sockets
- Install all spring pins and secure all gates
- Position the platform control box on the right side rail at the front of the platform.

DO NOT use the machine until all gates and guard rails are in position and properly secured.

Fold Down Rails (continued)

2684 Models

1 Open & Secure The Material Loading Gate

- Lift the upper Control Box off the Deck Extension Rail and place out of the way.
- Lift the gate latch and swing the Material Loading Gate open.
- Secure the gate to the side guardrail with the gate latch.

2 Lift & Lower The Deck Extension Rails

- Lift and lower the right-side deck extension rail.
- Lift and lower the left-side deck extension rail.

3 Lift & Lower The End Side Rails

- Lift and lower the left-side end rail.
- Lift and lower the right-side end rail.

4 Lift & Lower The Entry Rails

- Remove the corner caps that connect the rear side rails to the entry rails.
- Lift and lower the gate-side entry rail.
- Lift and lower the left-side entry rail.

5 Lift & Lower The Rear Side Rails

- Lift and lower the left rear side rail.
- Lift and lower the right rear side rail.

6 Guard rail fold-down is complete.

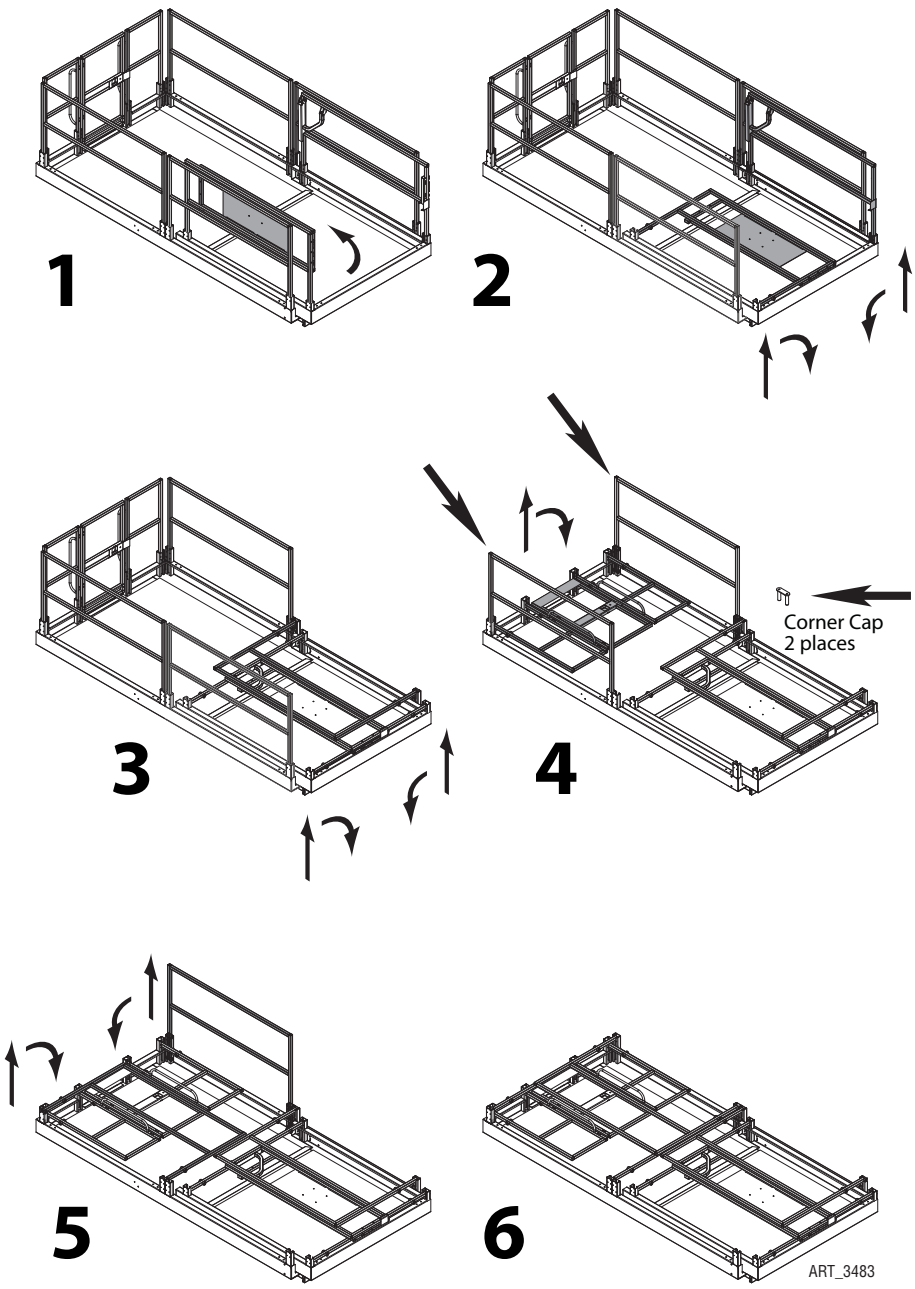

To return the machine to normal operation mode:

- Lift all rails into their upright position, then push down to secure them in their sockets
- Install all corner caps and secure all gates
- Position the platform control box on the right side rail at the front of the deck extension.

DO NOT use the machine until all gates and guard rails are in position and properly secured.

Machine Inspections

DO NOT operate this machine until you have read and understood this manual, have performed the Pre-Start Inspection, Routine Maintenance, and Functions Test, have inspected the workplace for hazards, and have learned the operating procedures for this machine.

The operator must conduct a thorough Pre-Start Inspection of the machine and test all functions before each work shift to check for damage, malfunction and unauthorized modification.

Tag and remove a damaged, malfunctioning or modified machine from service. DO NOT use a damaged, malfunctioning or modified machine.

Use the Pre-Start Inspection to determine what Routine Maintenance is required. The operator may perform only the routine maintenance items specified in this manual.

IMPORTANT— Scheduled maintenance inspection checklists are included in this manual for use only by qualified service technicians. Only qualified service technicians may perform repairs to the machine. After repairs are completed, the operator must perform a Pre-Start Inspection before proceeding to the Functions Test.

IMPORTANT— Properly dispose of all waste fluids, materials and used parts in accordance with national regulations.

DANGER

Never perform service on the machine with the platform elevated without first blocking the elevating assembly (see Support the Platform on page 26).

Never leave hydraulic components or hoses open. They must be protected from contamination (including rain) at all times.

Never open a hydraulic system when there are contaminants in the air.

Always clean the surrounding area before opening hydraulic systems.

Use only recommended lubricants. Improper lubricants or incompatible lubricants may be as harmful as no lubrication.

Watch for makeshift "fixes" which can jeopardize safety as well as lead to more costly repair.

WARNING

Hydraulic fluid under pressure can penetrate and burn skin, damage eyes, and may cause serious injury, blindness, and even death. Correct leaks immediately.

CAUTION

Failure to perform preventive maintenance at recommended intervals may result in the unit being operated with a defect that could result in injury or death of the operator.

Immediately report to your supervisor any Defect or malfunction. Any defect shall be repaired prior to continued use of the aerial work platform.

Inspection and maintenance should be performed by qualified personnel familiar with the equipment.

Fluid leaks under pressure may not always be visible. Check for pin hole leaks with a piece of cardboard, not your hand.

Pre-Start Inspection Checklist

The operator must conduct a thorough Pre-Start Inspection of the machine before each work shift – see "Machine Inspections" on page 20.

General Inspection Checklist

Initial	Description
_____	Check that the operator's, safety, and responsibilities manuals are in the storage container located on the platform.
_____	Perform a visual inspection of all machine components. Look for missing parts, torn or loose hoses, hydraulic fluid leaks, torn or disconnected wires, damaged tires etc.
_____	Check all structural components of the machine for cracked welds, corrosion and collision damage.
_____	Check the security and condition of the lanyard attachment points.
_____	Check all hoses and the cables for worn or chafed areas.
_____	Check the platform rails and sliding mid-rail entry for damage or modification.
_____	Check that all warning and instructional labels are legible and secure.
_____	Check the tires for damage.
_____	Check the tire pressure (not required for foam filled tires).
_____	Check the lower limit switch for visual damage or loose or missing hardware.
_____	All structural components, pins and fasteners are present and properly tightened.

Fluid Level Checklist

_____ Check for fluid leaks.

_____ Hydraulic fluid level (check with platform fully lowered).

Secure for operation

_____ Secure all covers and panels. Perform Routine Maintenance as needed, then proceed to the Functions Test.

DATE_____INSPECTED BY _____

Monthly Inspection Checklist

WARNING

This checklist must be used at monthly intervals or every 100 hours of machine use, whichever occurs first. Failure to do so could result in death or serious injury.

Scheduled Maintenance Inspections should be conducted by qualified service technicians only. Photocopy this page for reuse. Keep inspections records up to date. Record and report all discrepancies to your supervisor.

Model Number _____ **Serial Number**_____

Initial	Description
_____	Perform all checks listed on Prestart Inspection.
_____	Inspect the condition of hydraulic fluid in the reservoir. Oil should have a clear amber color.
_____	Check battery electrolyte level and connections.
_____	Check wheel lug nuts for proper torque (see *Specifications*).
_____	Check if tires are leaning in or out.
_____	Inspect all beams and pivot points for signs of wear and/or damage.
_____	Check the pin joints and retaining rings for security.
_____	Inspect the entire machine for signs of damage, broken welds, loose bolts, improper or makeshift repairs.
_____	Check that the platform does not drift down with a full load.
_____	Lubricate the king pins, steering cylinder pivot points, and tie rod ends (see *Lubrication* on page 27).
_____	Check all wire connections.
_____	Check that all adjustable flow valves are locked, check setting if any are not locked.
_____	Lubricate the boom gear (see *Lubrication* on page 27).

DATE_____**INSPECTED BY** _____

Quarterly Inspection Checklist

WARNING

This checklist must be used at quarterly intervals or every 300 hours of machine use, whichever occurs first. Failure to do so could result in death or serious injury.

Scheduled Maintenance Inspections should be conducted by qualified service technicians only. Photocopy this page for reuse. Keep inspections records up to date. Record and report all discrepancies to your supervisor.

Model Number _____ **Serial Number** _____

Initial	Description
_____	Perform all checks listed on Prestart/Monthly Inspection.
_____	Check the operation speeds to ensure they are within specified limits (see *Specifications*).
_____	Check the emergency lowering system.
_____	Clean and lubricate all push button switches with dry lubricant and ensure that the switches operate freely in all positions.
_____	Check the tightness of the platform frame and the linkage pins.
_____	Check the overall platform and guardrail component stability.
_____	Check the electrical mounting and hardware connections for security.
_____	Check the king pins for excessive play.

Additional maintenance requirements for severe conditions

_____ Replace hydraulic filter element (under normal conditions replace every six [6] months).

DATE_____**INSPECTED BY** _____

Annual Inspection Report

Date _____
Serial Number _____
Model Number _____
Date Of Last Inspection _____
Date Placed In Service _____

MEC Aerial Platform Sales Corp.
1401 S. Madera Avenue • Kerman, CA 93630 USA
877-632-5438 • 559-842-1500 • Fax: 559-842-1520

Customer _____
Street _____
City/State/Zip _____
Phone Number _____
Contact _____

Dealer _____
Street _____
City/State/Zip _____
Phone Number _____
Contact _____

- Check each item listed below.
- Use proper Operator's, Service and Parts manual for specific information and settings.
- If an item is found to be "Unacceptable" make the necessary repairs and check the "Repaired" box.
- When all items are "Acceptable", the unit is ready for service.
- Please fax a copy to MEC or email to EMAIL ADDRESS

Key:
"Y" Yes/Acceptable
"N" No/Unacceptable
"R" Repaired
"U" Unnecessary/Not Applicable

	Y	N	R	U		Y	N	R	U		Y	N	R	U
Decals:					Base:					Operation:				
Proper Placement/Quantity					Cover Panels Secure					Wires Tight				
Legibility					Base Fasteners Tight					Switches Secure				
Correct Capacity Noted					Bolts Tight					All Functions Operational				
Rails:					Front Axle Mounting (4WD)					Emergency Down:				
All Rail Fasteners Secure					Rear Axle Mounting (4WD)					Operational				
Entry Gate Closes Properly					Front Axle/Front Wheel Assemblies:					Slow Speed Limit Switch:				
Manual/Safety Data In Box					Wheel Motors-Mounting Secure					Set Properly				
					Wheel Motors-Leaks					Pressures & Hydraulics:				
Extending Platform:					Lug Nuts Torqued Properly					Oil Filter Secure/Chg				
Slides Freely					Steering Cylinder Pins Secure					Oil Level Correct/Chg				
Latches In Stowed Position					Pivot Points Lubed					Steering Pressure Set				
Latches In Extended Position					Drive Assembly Front Hubs:					Drive Pressurre Set				
Rail Latches Work Properly					Castle Nut Torqued Properly					Lift Pressure Set				
					Cotter Pinned					Options Operational:				
Platform:					Rear Axle/Rear Wheel Assemblies:					Hour Meter				
Platform Bolts Tight					Brakes Operational					Battery Indicator				
Platform Structure					Wheel Motors-Mounting Secure					Warning Light				
Platform Overload System:					Wheel Motors-Leaks					Warning Horn				
Functional					Lug Nuts Torqued Properly					Generator				
Calibrated										Converter				
Wire Harnesses:					Axle Lock Operational									
Mounted Correctly					Component Area:									
Physical Appearance					Valve Manifold(s) Secure									
110/220V Outlet Safe/Working					Hoses Tight/No Leaks									
Elevating Assembly:					D/C Mtr(s) Secure/Operational									
Beam Structures					Contactors Secure									
Welds					Pump Secure									
Retaining Rings					Batteries:									
Upper Cylinder Pins Secure					Secure									
Lower Cylinder Pins Secure					Fully Charged									
Lower Beam Mounts tight					Battery Charger:									
Rollers Turn Freely					Secure									
Maintenance Locks:					Operational									
Secure					Emergency Stop:									
Operational					Breaks All Circuits									

Comments: _____

Signature/Mechanic: Date:

Art_3145 Signature/Owner-User: Date:

Maintenance

DO NOT operate this machine until you have read and understood this manual, have performed the Pre-Start Inspection, Routine Maintenance, and Functions Test, have inspected the workplace for hazards, and have learned the operating procedures for this machine.

Tag and remove a damaged, malfunctioning or modified machine from service. DO NOT use a damaged, malfunctioning or modified machine.

Use the Pre-Start Inspection to determine what Routine Maintenance is required. The operator may perform only the routine maintenance items specified in this manual.

IMPORTANT—Scheduled maintenance inspection checklists are included in this manual for use only by qualified service technicians. Only qualified service technicians may perform repairs to the machine. After repairs are completed, the operator must perform a Pre-Start Inspection before proceeding to the Functions Test.

DANGER

Never perform service on the machine with the platform elevated without first blocking the elevating assembly (see Support the Platform on page 26).

Never leave hydraulic components or hoses open. They must be protected from contamination (including rain) at all times.

Never open a hydraulic system when there are contaminants in the air.

Always clean the surrounding area before opening hydraulic systems.

Use only recommended lubricants. Improper lubricants or incompatible lubricants may be as harmful as no lubrication.

Watch for makeshift "fixes" which can jeopardize safety as well as lead to more costly repair.

WARNING

Hydraulic fluid under pressure can penetrate and burn skin, damage eyes, and may cause serious injury, blindness, and even death. Correct leaks immediately.

CAUTION

Failure to perform preventive maintenance at recommended intervals may result in the unit being operated with a defect that could result in injury or death of the operator.

Immediately report to your supervisor any Defect or malfunction. Any defect shall be repaired prior to continued use of the aerial work platform.

Inspection and maintenance should be performed by qualified personnel familiar with the equipment.

Fluid leaks under pressure may not always be visible. Check for pin hole leaks with a piece of cardboard, not your hand.

Routine Maintenance

IMPORTANT— The operator may perform routine maintenance only. Scheduled maintenance must be performed by qualified service technicians.

Charge Batteries See *Charge Batteries* on page 29

Pre-Start Inspection Perform routine maintenance as identified in the *Pre-Start Inspection Checklist* on page 21.

Scheduled Maintenance

Maintenance performed monthly, quarterly, annually and bi-annually must be performed by a qualified service technician trained and authorized to perform maintenance on this machine, and must be done in accordance with the procedures outlined in the service manual. Scheduled maintenance inspection checklists are included in this manual for use by qualified service technicians.

Machines that have been out of service for more than three months must receive the quarterly inspection before returning to service.

Support the Platform

DANGER

Never perform service on the machine with the platform elevated without first supporting the elevating assembly.

Use a crane with chains and straps of adequate lifting capacity to support the platform.

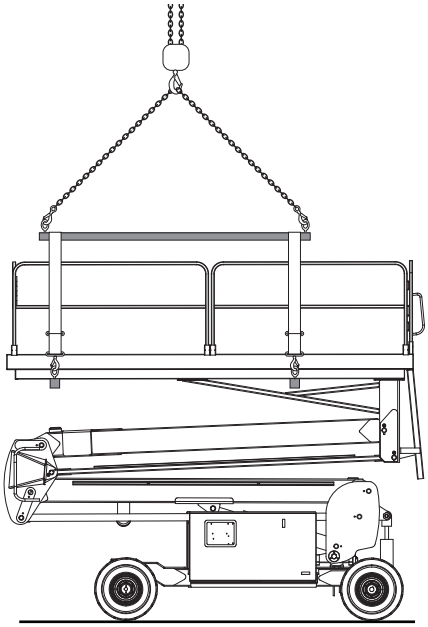

Art_3098

Lubrication

Operator may perform routine maintenance only. Lubrication listed as Scheduled Maintenance must be performed by a qualified service technician.

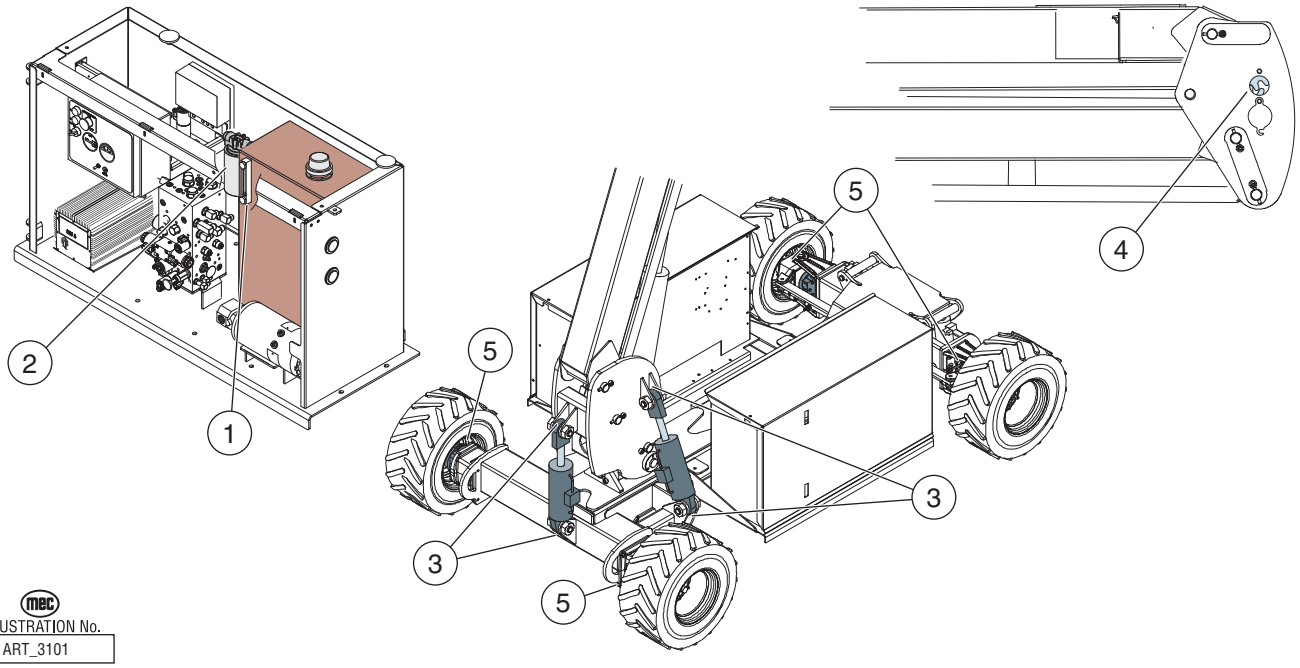

Lubrication

No.	ITEM	SPECIFICATION	FREQUENCY
1	Hydraulic Reservoir	**Mobile Fluid DTE 10, DTE 13 M, or AW32** ***Do not substitute with lower grade fluids as pump damage may result.*** Fill to the middle of the sight gauge with platform in the stowed position.	**Routine Maintenance** Check Daily **Scheduled Maintenance** Change yearly or every 1000 hours, whichever occurs first
2	Hydraulic Filter	**Filter Element**	**Scheduled Maintenance** **Normal Conditions** Change every six months or 500 hours, whichever occurs first **Severe Conditions** Change every three months or 300 hours, whichever occurs first
3	Tilt Cylinders Pivot Points	**Lithium N.L.G. #2 EP** Purge old grease	**Scheduled Maintenance** **Normal Conditions** Apply every 6 months or 500 hours, whichever occurs first **Severe Conditions** Apply every 3 months or 250 hours, whichever occurs first
4	Boom Gear	**High copper content anti-seize compound.** Apply new grease	**Scheduled Maintenance** **Normal Conditions** Apply every 1 months or 100 hours, whichever occurs first **Severe Conditions** Apply every 2 weeks or 50 hours, whichever occurs first

Battery Charger

The charger is an advanced, microprocessor controlled, high frequency switching type charger.

The charger will work even with batteries in a severe discharge state with battery terminal voltages as low as 4V. This reduces the need to "boost charge" weak batteries before charging.

The charger has a 22 hour timer in case charging can not be completed due to battery problems. The charger senses and flashes error codes for problems – refer to the *SERVICE MANUAL*.

Battery charger LEDs can be viewed through a window in the door of the Control Module.

IMPORTANT— Unit will not operate when charger is plugged in. Be sure to disconnect the charger from the outlet before attempting to operate the unit.

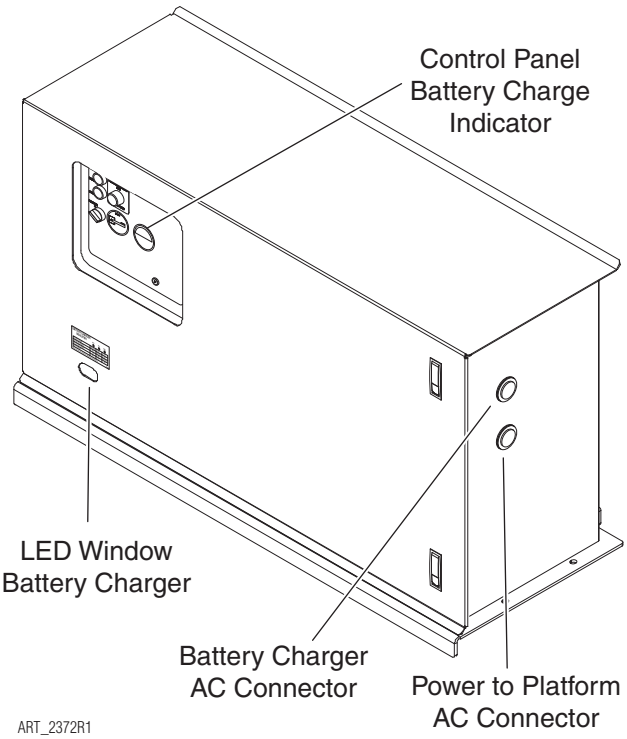

WARNING

Lead-acid batteries generate explosive gases. Keep sparks and flame away from batteries.

No Smoking!

The charger surface can get hot while operating. Contact with the skin or surrounding materials should be avoided.

To reduce the risk of an electric shock, connect only to a properly grounded single-phase (3 wire) outlet.

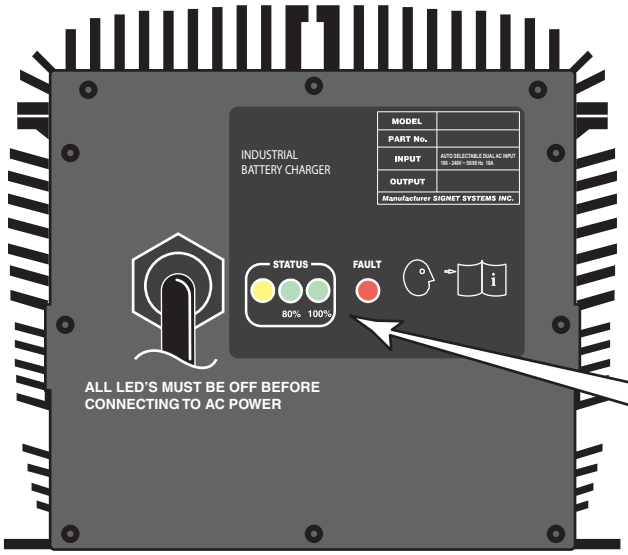

BATTERY CHARGER INDICATOR

	YELLOW	80%	100%	FAULT
No AC power to charger	OFF	OFF	OFF	OFF
Normal operation, charger is charging	ON	OFF	OFF	OFF
Normal, battery is over 80% charged	ON	ON	OFF	OFF
Normal, battery is 100% charged	OFF	OFF	ON	OFF

Please see service manual for additional information.

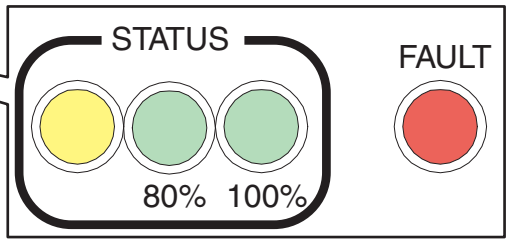

ILLUSTRATION No.
ART_2374

Charge Batteries

1 Plug the charger into a single phase AC socket with a nominal voltage rating of 100V, 110V, 115V, 120V, 220V, 230V, or 240V and a frequency rating of 50 or 60Hz.
   - The charger automatically senses and adjusts to the AC voltage and frequency.
   - At 110/120V the wall socket circuit breaker should be a 20A breaker with no other loads on the circuit.

2 The charger will start automatically within a few seconds and begin charging the batteries.

3 The LED's indicate the charging progress.
   - The yellow LED will turn *ON* and remain *ON* throughout the charging cycle.
   - When the battery is 80% charged the green 80% LED will turn *ON*.
   - When the battery is fully charged the green 100% LED will turn *ON* and the green 80% LED will turn *OFF*.
   - When the battery is fully charged the yellow LED will turn *OFF* indicating that the charger is no longer charging.
   - Charging time is dependent on depth of battery discharge, battery condition, and temperature.
   - If the charger is left plugged in after charging is complete (100% LED *ON*) the charger goes into maintenance mode to keep batteries charged while in storage.
   - The charger continuously measures battery voltage and restarts the charging cycle if the battery voltage drops below about 50V. This keeps batteries charged while in storage but does not boil-out the electrolyte over time.

4 Red FAULT LED
   - **ON:** Battery pack probably bad, weak, or a bad cell.
   - **1 FLASH:** Open or short circuit. Remove from service until problem is identified and corrected.
   - **2 FLASH:** Charger timed out. Battery pack probably bad, weak, or a bad cell. Unplug for 30 seconds, then plug in to start a new charge cycle.

   Note: New batteries sometimes need 20 to 30 charge/discharge cycles before they charge normally. The charger LEDs may only show yellow or 80% LED *ON* after overnight charging. Within a few weeks the 100% LED will turn *ON* at the end of the charge cycle.

5 Turn *OFF* charger by unplugging (disconnect from AC voltage).

Hybrid Generator Operation

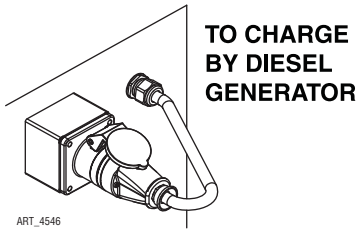

These instructions are for use with the Hybrid Generator System using the Kipor KDE5000E generator. To charge the machine using this generator, the cord from the generator must be inserted into the charger receptacle as shown. These components are located on the right side of the Controls Module.

The generator may be operated two ways:

- Through the Upper Control Box using the Generator Operation Switch
- By starting the generator with the key switch located on generator

Normal hybrid operation is through the Upper Control Box toggle switch. When operated through the Upper Control Box, the generator has three starting modes:

- Automatic
- Manual Automatic
- Manual

In all modes, the generator may be manual turned off by switching the Generator Operation Switch to the OFF position.

In all modes, the machine must be turned on to allow the control system to operate the generator. The generator can also be turned on at the generator itself by using the generator's key switch. From the key switch, the generator will only run in manual mode and must be manually turned off at the same key switch.

Automatic Mode

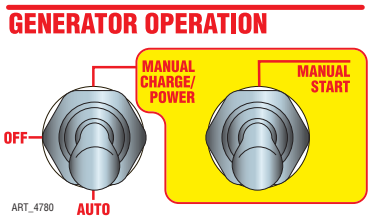

Set the left-hand Generator Operation Switch to AUTO to enable the generator system to operate automatically.

In Automatic Mode, the control system constantly checks the battery level of the machine and turns on the generator to charge the batteries when that level reaches a preset low battery condition.

Manual Automatic Mode

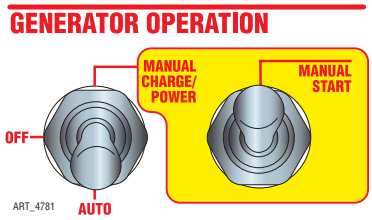

With the Generator Operation Switch still set to AUTO, the generator may be manually started if deemed necessary by the operator. Push the Generator Manual Start switch UP and hold it for 1 second.

Holding this switch for 1 second will start the generator, which will then follow the typical Automatic Mode function.

Manual Mode

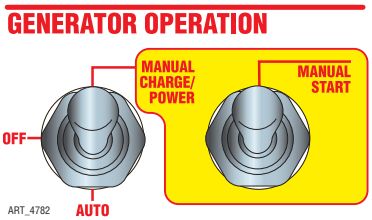

To bypass the automatic mode, set the Generator Operation Switch to MANUAL CHARGE/POWER, then push the Generator Manual Start switch UP. The generator will start instantly.

The generator should be left on Manual Mode only when operating the generator. Return the switch to the OFF position when the generator is not in use to prevent its hour meter from running continuously.

Component Locations

Full Machine

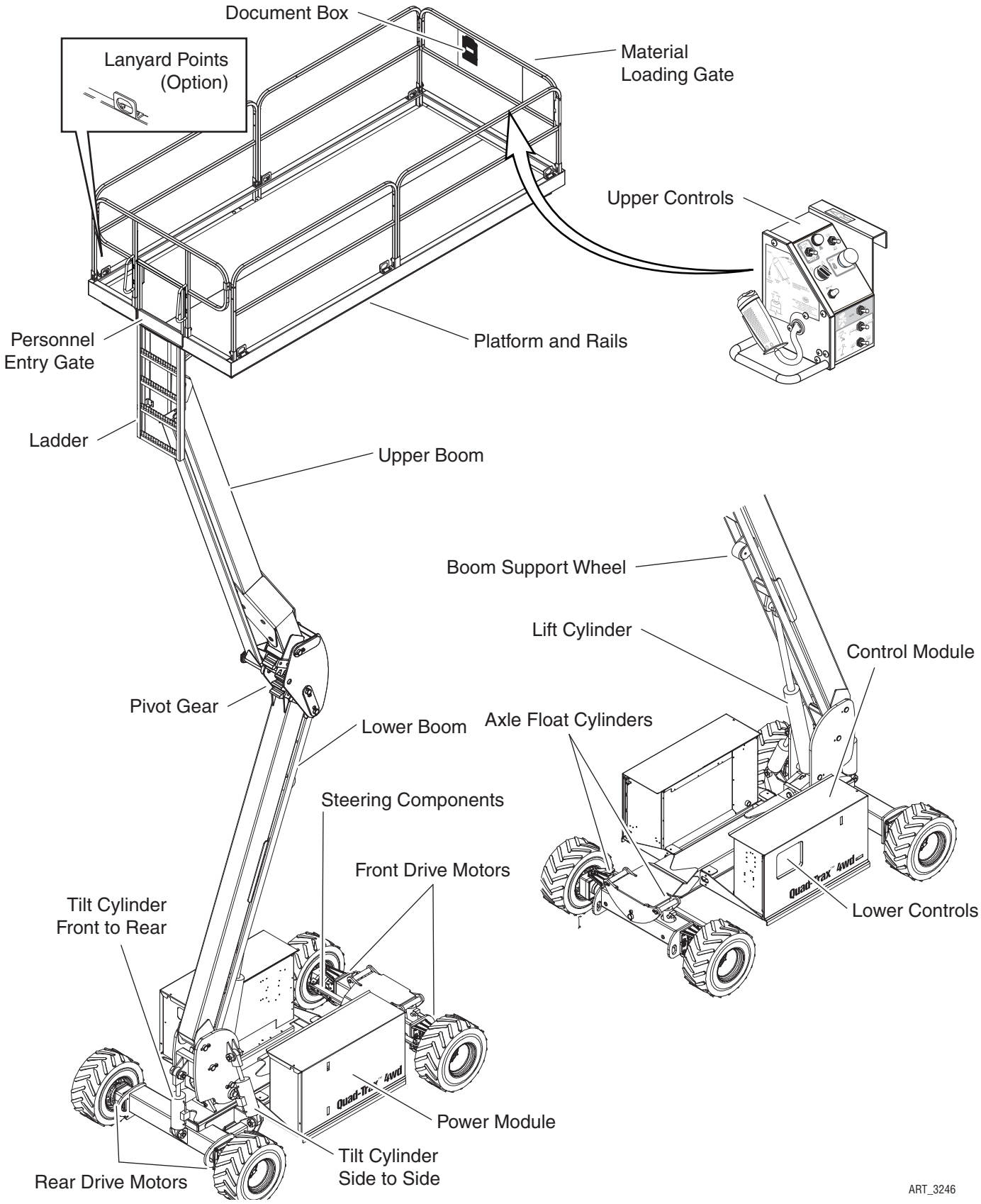

Modules

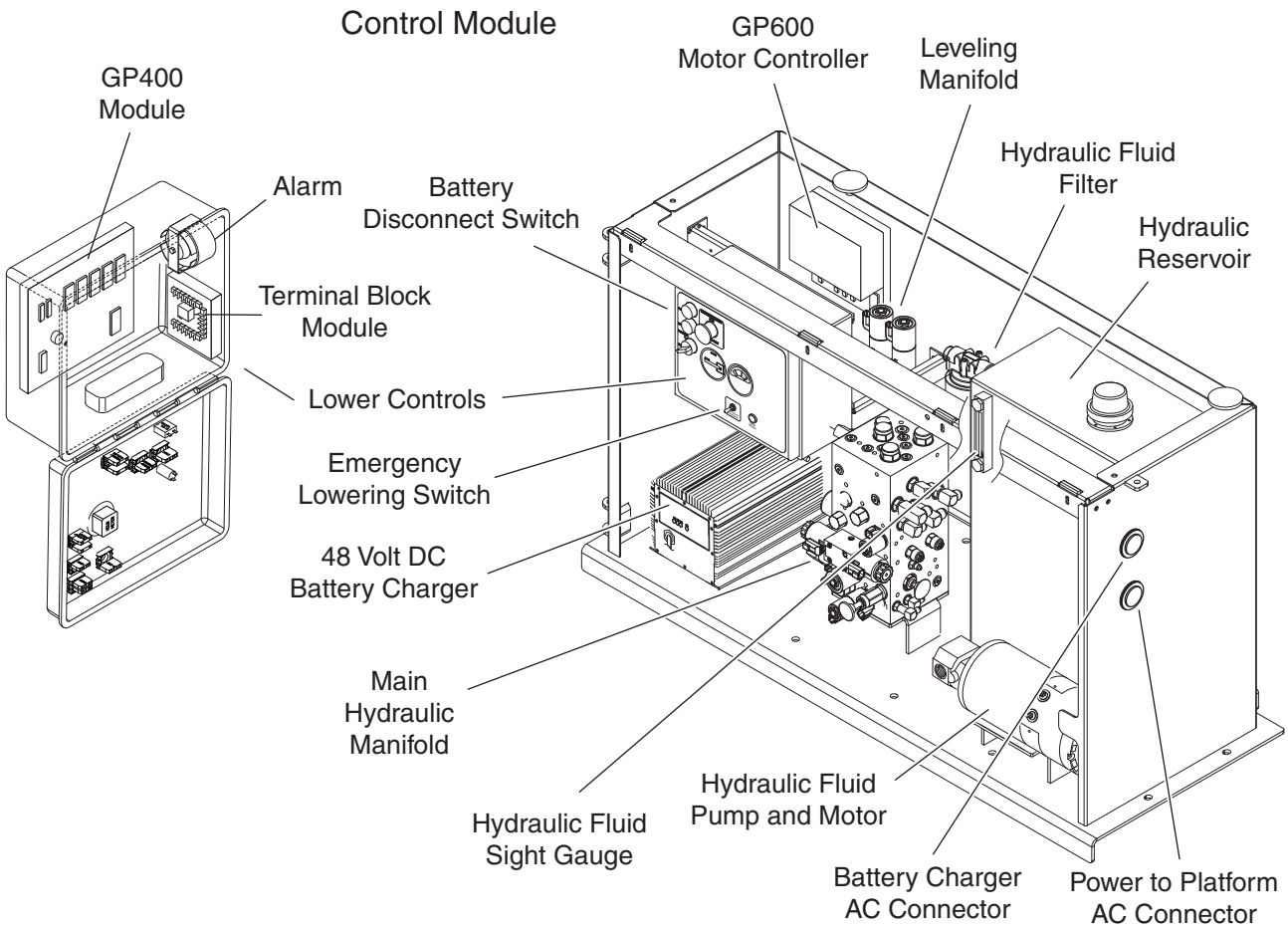

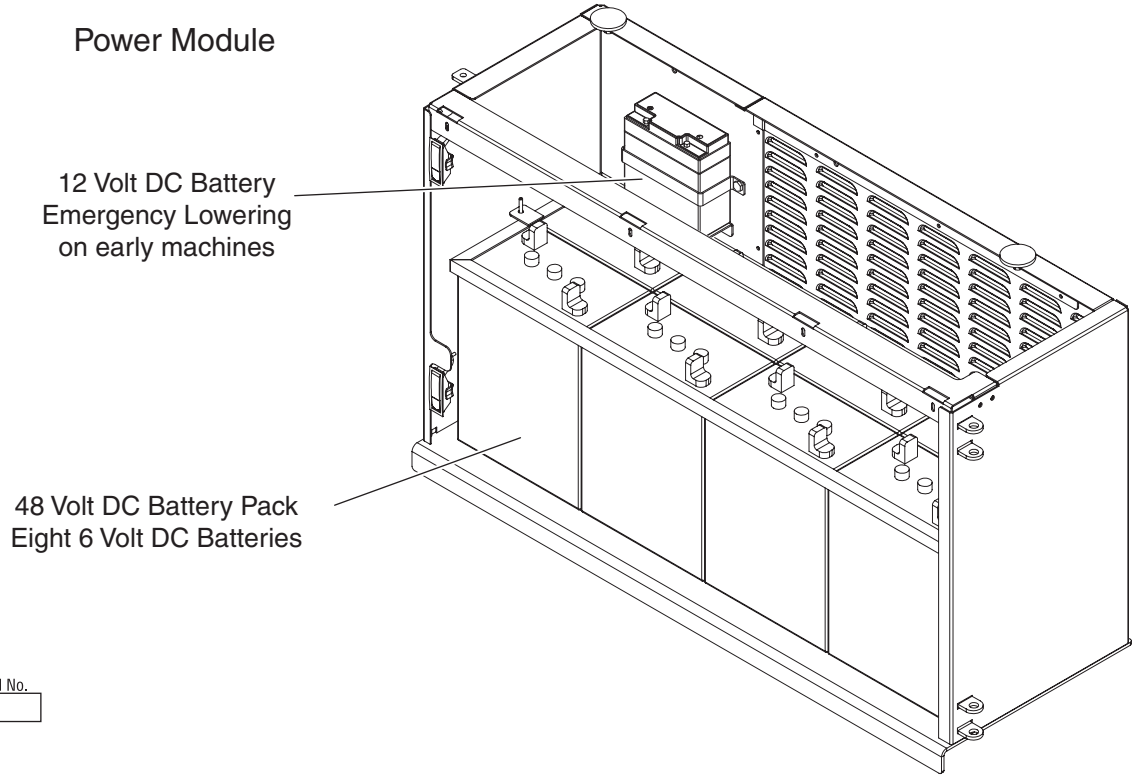

ILLUSTRATION No.
ART_3099

Upper Controls

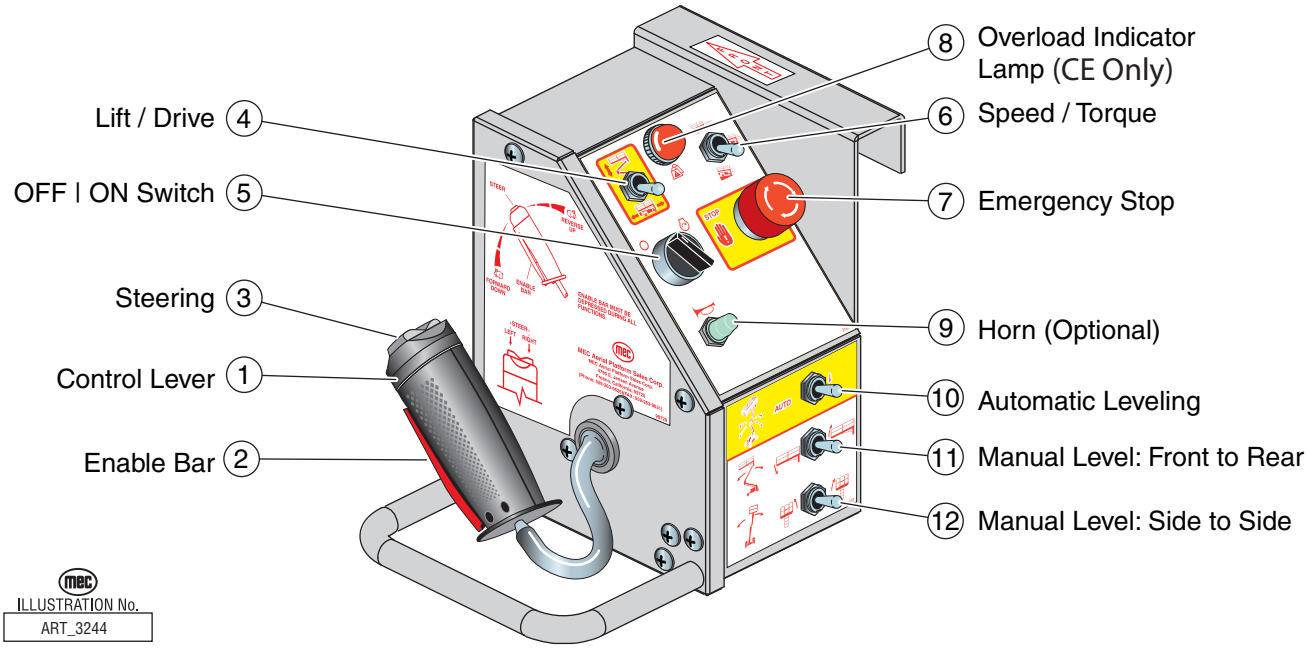

CONTROL		DESCRIPTION	
1	Control Lever	DRIVE	Proportionally controls Forward and Reverse travel speed.
		LIFT	Move toward operator to elevate platform. Lift speed increases proportional to the control lever movement Move away from operator to lower platform. Speed is fixed.
2	Enable Bar	Squeeze to enable DRIVE, STEER, and LIFT from control lever.	
3	Steering Switch	Using thumb, press and hold the rocker switch to steer Left or Right.	
4	Mode Selector	Select LIFT or DRIVE function for control lever.	
5	OFF / ON Switch	Turn power ON or OFF at the platform. Does not affect lower controls.	
6	Speed / Torque Switch	HIGH TORQUE	Slow speed. Provides maximum torque for rough terrain.
		MID RANGE	Mid speed. Provides medium torque for smooth to moderate terrain.
		HIGH SPEED	Provides high speed when platform height is below 10 feet (3 m).
7	EMERGENCY STOP Switch	PUSH to stop all machine functions. TURN CLOCKWISE to reset.	
8	Overload Indicator	Light *ON* indicates platform overloaded.	
9	Horn (option)	Press to sound warning horn.	
10	Automatic Level Switch	Move switch DOWN and hold until automatic leveling is complete.	
11	Manual Level Switch Front to Rear	Move switch to the left to LOWER the front of the platform. Move the switch to the right to RAISE the front of the platform.	
12	Manual Level Switch Side to Side	Move the switch to the left to move the platform to the LEFT. Move the switch to the right to move the platform to the RIGHT.	

Lower Controls

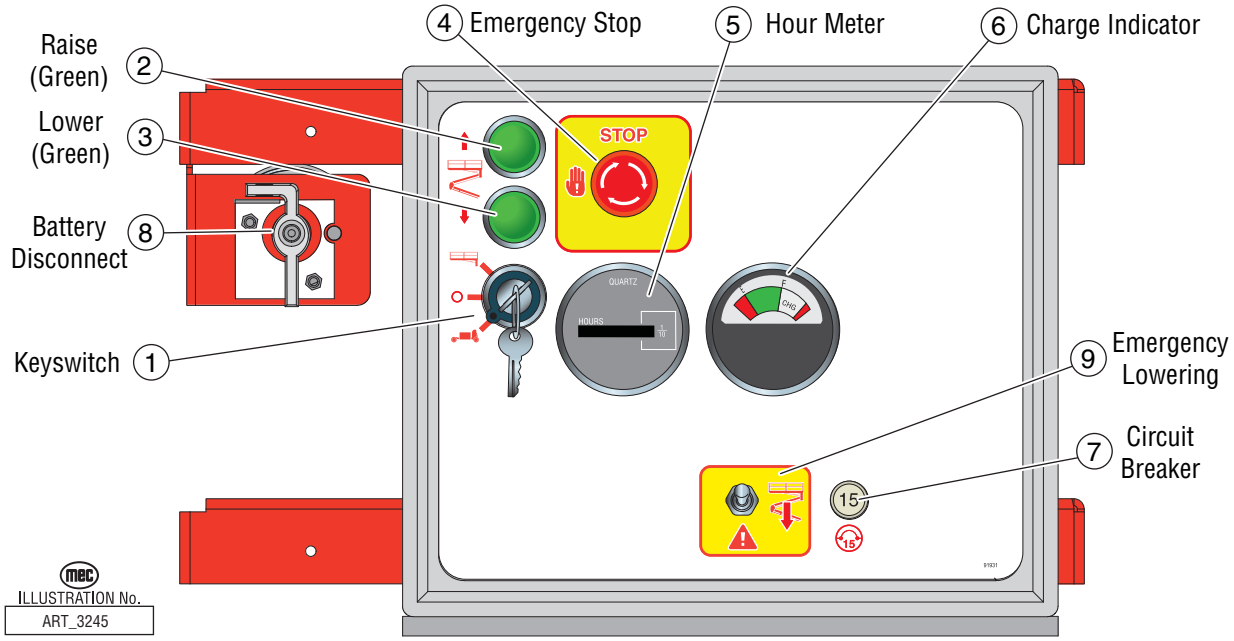

CONTROL		DESCRIPTION	
1	Selector Switch	PLATFORM	Select to operate from the platform control panel.
		BASE	Select to operate from the base control panel.
		OFF	Select to stop operation from either control panel.
2	RAISE Button	Press and hold to elevate the platform. Release to stop elevation.	
3	LOWER Button	Press and hold to lower the platform. Release to stop lowering.	
4	EMERGENCY STOP Switch	Press to stop all machine functions. Turn *clockwise* to reset.	
5	Hour Meter	Indicates total elapsed time of machine operation.	
6	Charge Indicator	Indicates state of battery charge.	
7	Circuit Breaker	Trips when there is excessive electrical load. Push to reset.	
8	Battery Disconnect	Battery power supply. Turn OFF and padlock to secure machine from unauthorized use.	
9	EMERGENCY LOWERING Switch	Push and hold the toggle switch Down to fully lower the platform.	

Decals

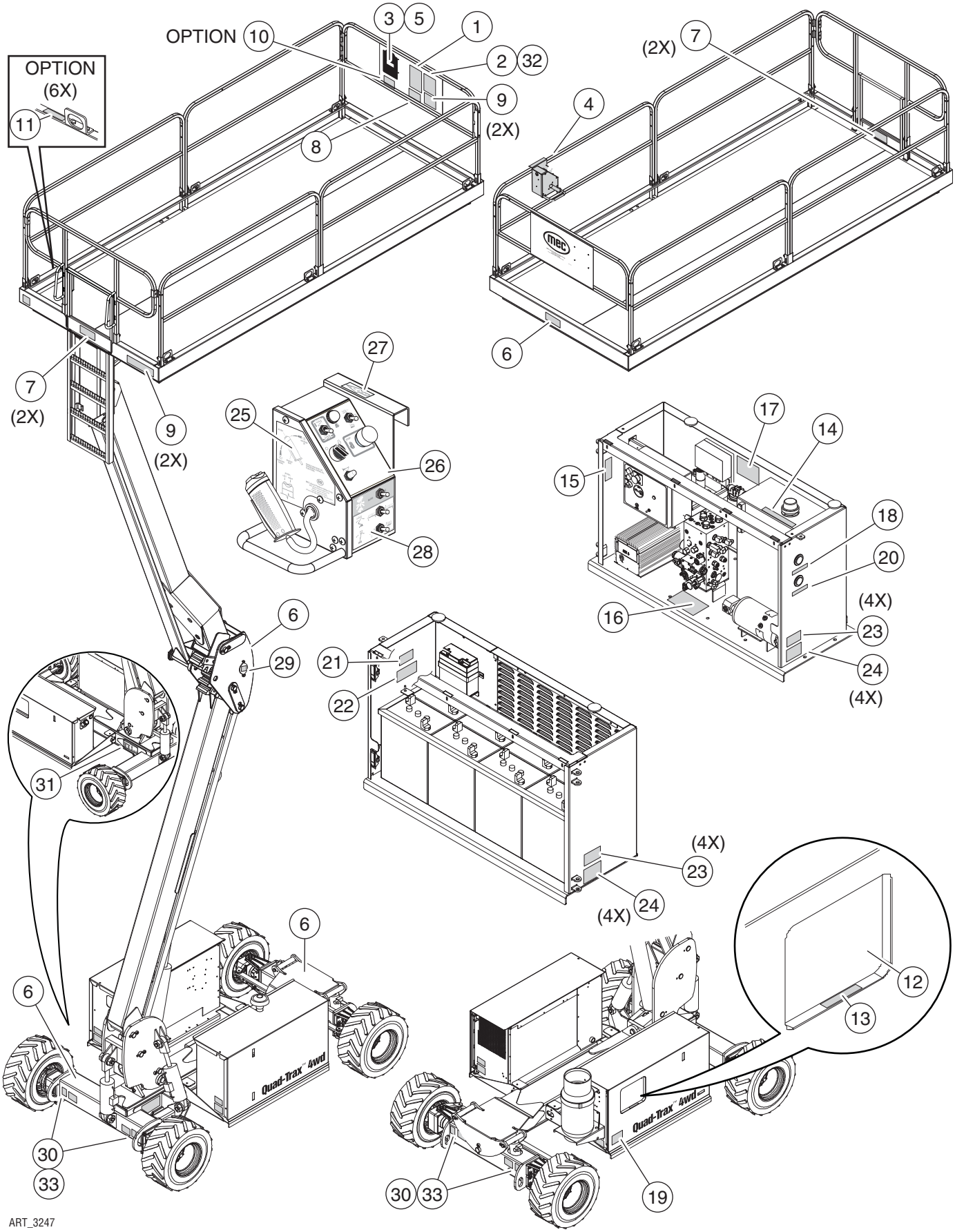
OPTION
OPTION
(6X)
(2X)
(2X)
(2X)
(4X)
(4X)
(4X)
(4X)
Quad-Trax 4wd
Quad-Trax 4wd
ART_3247

Decals (continued)

PLATFORM

1 91846

WARNING

INSPECT MACHINE AND MAKE SURE THAT IT IS OPERATING PROPERLY, THAT ALL NAME PLATE AND SAFETY AND CONTROL DECALS ARE IN PLACE AND LEGIBLE, AND THAT THE MACHINE IS IN ACCORDANCE WITH THE MANUFACTURER'S MAINTENANCE REQUIREMENTS CONTAINED IN THE OPERATION AND MAINTENANCE MANUAL AND THE DAILY SAFETY CHECKLIST.

OPERATE MACHINE WITH EXTREME CAUTION. WATCH FOR OBSTRUCTIONS WHICH MAY STRIKE PLATFORM, PERSONNEL, CONTROLS, OR MACHINE. OPERATE CONTROLS SLOWLY FOR SMOOTH PLATFORM MOTION.

FOR DRIVING WITH PLATFORM LOWERED:

- DO NOT EXCEED MAXIMUM PLATFORM OR EXTENSION LOAD LIMIT CAPACITY. LOAD TO BE UNIFORMLY DISTRIBUTED. PLACE LOAD NEAR CENTER OF PLATFORM WHEN POSSIBLE.
- DO NOT DRIVE ON SIDE SLOPE IF PLATFORM IS OVER 5% OFF LEVEL.
- DO NOT DRIVE UP OR DOWN A GRADE OF OVER 40%.

FOR DRIVING WITH PLATFORM ELEVATED:

- DRIVE ONLY ON A SMOOTH, FIRM, AND PLANAR SURFACE FREE OF OBSTRUCTIONS.
- DO NOT EXCEED MAXIMUM PLATFORM OR EXTENSION LOAD CAPACITY.
- LOAD MUST BE UNIFORMLY DISTRIBUTED.
- IF TILT WARNING LIGHT ILLUMINATES OR TILT ALARM SOUNDS LOWER PLATFORM AND RE-LEVEL.
- USE EXTREME CAUTION.

OTHER HAZARDS

1. DO NOT EXCEED PLATFORM LOAD CAPACITY.
2. DO NOT EXCEED MAXIMUM SIDE FORCE AND MAXIMUM NUMBER OF OCCUPANTS.
3. DO NOT USE WITHOUT GUARD RAILS IN PLACE, AND ENTRY GATE PROPERLY SECURED.
4. DO NOT USE IF WORK PLATFORM IS NOT WORKING PROPERLY OR IF ANY PART IS DAMAGED OR WORN.
5. DO NOT USE NEAR MOVING VEHICLES OR CRANES.
6. DO NOT STAND OR SIT ON GUARDRAILS. ALL PERSONNEL SHALL ALWAYS MAINTAIN FIRM FOOTING ON PLATFORM FLOOR.
7. DO NOT USE WHILE UNDER THE INFLUENCE OF ALCOHOL OR DRUGS.
8. DO NOT OVERRIDE SAFETY DEVICES.
9. DO NOT LEAVE MACHINE UNATTENDED WITH KEY IN THE SWITCH.
10. DO NOT RAISE PLATFORM WHILE MACHINE IS ON A TRUCK, FORKLIFT, OR OTHER DEVICE OR VEHICLE.
11. DO NOT USE LADDER, SCAFFOLDING, OR OTHER DEVICES TO INCREASE SIZE OR WORKING HEIGHT OF PLATFORM.
12. DO NOT ENTER OR EXIT PLATFORM WHILE IN MOTION.
13. DO NOT RECHARGE BATTERIES NEAR SPARKS OR OPEN FLAME. BATTERIES EMIT HIGHLY EXPLOSIVE HYDROGEN GAS.
14. DO NOT PERFORM SERVICE ON THE MACHINE WITHOUT PROPERLY SUPPORTING ELEVATING ASSEMBLY.
15. DO NOT ATTACH OVERHANGING LOADS OR INCREASE PLATFORM SIZE.

IMPROPER OPERATION OF THIS MACHINE COULD CAUSE DEATH OR SERIOUS INJURY.

91846

8 91869

WARNING

- **SHEET LOADING GATE** MUST BE IN LOCKED POSITION BEFORE OPERATING FROM PLATFORM.
- **PLATFORM ENTRANCE** MUST BE PROPERLY CLOSED AND ALL GUARDRAILS PROPERLY IN PLACE AND SECURED BEFORE OPERATING FROM PLATFORM.

FAILURE TO FOLLOW INSTRUCTIONS COULD CAUSE DEATH, PERSONAL INJURY AND PROPERTY DAMAGE

91869

2 91845

DANGER

YOU MUST NOT OPERATE THIS MACHINE:

UNLESS YOU HAVE BEEN AUTHORIZED TO USE AND TRAINED IN THE SAFE OPERATION OF THIS MACHINE.

TRAINING INCLUDES COMPLETE KNOWLEDGE OF THE SAFETY AND OPERATION INSTRUCTIONS, OPERATOR'S AND MAINTENANCE MANUAL AND MANUAL OF RESPONSIBILITIES, YOUR EMPLOYERS WORK RULES AND APPLICABLE GOVERNMENTAL REGULATIONS.

AN UNAUTHORIZED AND UNTRAINED OPERATOR SUBJECTS THEMSELF AND OTHERS TO DEATH OR SERIOUS INJURY.

ELECTROCUTION HAZARD
THIS MACHINE IS NOT INSULATED

MAINTAIN SAFE CLEARANCE FROM ELECTRICAL LINES AND APPARATUS. YOU MUST ALLOW FOR MACHINE SWAY, ROCK OR SAG AND ELECTRICAL LINES SWAYING.

THIS MACHINE DOES NOT PROVIDE PROTECTION FROM CONTACT WITH OR PROXIMITY TO AN ELECTRICALLY CHARGED CONDUCTOR.

YOU MUST MAINTAIN A CLEARANCE OF AT LEAST TEN (10) FEET BETWEEN ANY PART OF THIS MACHINE OR ITS LOAD AND ANY ELECTRICAL LINE OR APPARATUS CARRYING UP TO 350,000 VOLTS. AN ADDITIONAL CLEARANCE IS REQUIRED FOR EVERY ADDITIONAL 30,000 VOLTS OR LESS.

DEATH OR SERIOUS INJURY WILL RESULT FROM CONTACT OR INADEQUATE CLEARANCE

TIP-OVER HAZARDS

DO NOT DRIVE NEAR DROP-OFFS, HOLES, OPEN ELEVATOR SHAFTS, AND LOADING DOCKS

DO NOT ELEVATE PLATFORM ON UNEVEN OR SOFT SURFACES

DO NOT DRIVE ONTO UNEVEN OR SOFT SURFACES WHEN ELEVATED

DO NOT RAISE PLATFORM IN WINDY OR GUSTY CONDITIONS

DEATH OR SERIOUS INJURY WILL RESULT FROM IMPROPER USE OF THIS EQUIPMENT

91845

3 90733

MANUALS INSIDE

90733

4 7155

LOCATE CONTROL BOX HERE
FOR NORMAL OPERATION OF THIS UNIT

7155

5 90718 INSIDE DOCUMENT CASE

WARNING

USE OR OPERATION OF AN UNINSPECTED WORK PLATFORM COULD CAUSE DEATH, PERSONAL INJURY.

NEW	• DO NOT OPERATE THIS WORK PLATFORM IF AN INSPECTION HAS NOT BEEN PERFORMED WITHIN 13 MONTHS OF THE LAST RECORDED INSPECTION DATE.	6TH YEAR
1ST YEAR		7TH YEAR
2ND YEAR	• STAMP MONTH/DAY/YEAR NEXT TO APPROPRIATE YEAR AFTER EACH INSPECTION.	8TH YEAR
3RD YEAR	— NOTICE —	
4TH YEAR	CHANGE OF OWNERSHIP OF THIS WORK PLATFORM MUST BE REPORTED TO MANUFACTURER: MEC Aerial Platform Sales Corp. 4760 S. Orange Avenue Fresno, California 93725 Phone: (559) 2034928	9TH YEAR
5TH YEAR		10TH YEAR

90718

6 91850 (4 PLACES)

7 91849 (2 PLACES)

WARNING

DISTANCE FROM GROUND TO LADDER WILL VARY WITH GROUND VARIATIONS. CHECK DISTANCE BEFORE LEAVING PLATFORM.

9 Model 3084 -- 91944

WARNING

MAXIMUM PLATFORM CAPACITY EVENLY DISTRIBUTED

680 kg

5 PERSONS

MAXIMUM WIND SPEED 12.5 M/S 45 KM/H

MAXIMUM SIDE LOAD 400 N

Model 2684 -- 92121

WARNING

MAXIMUM PLATFORM CAPACITY EVENLY DISTRIBUTED

5 PERSONS 770 kg

2 PERSONS 320 kg

MAXIMUM WIND SPEED 12.5 M/S 45 KM/H

MAXIMUM SIDE LOAD 400 N

32 91325 Australia only

DANGER

THIS MACHINE IS NOT INSULATED!! DEATH OR SERIOUS INJURY will result from contact with or inadequate clearance from any electrically charged conductor.

MINIMUM CLEARANCES FROM POWER LINES

CLEARANCES FOR OPERATING ELEVATING WORK PLATFORMS NEAR POWER LINES WHILE IN OPERATING MODE

OVERHEAD POWER LINES ON POLES — OVERHEAD POWER LINES ON TOWERS

NO GO ZONE

91325

OPTION

10 8606

WARNING

- LANYARD ANCHORAGE POINTS ARE RECOMMENDED FOR WORK POSITIONING RESTRAINTS ONLY.

USE OF FALL ARREST SYSTEMS ATTACHED TO ANCHORAGE POINTS ON MOBILE EQUIPMENT MAY CAUSE MACHINE TO TIP, RESULTING IN SERIOUS INJURY OR DEATH.

8606

11 91970 (6 PLACES)

x1

91970

CONTROL MODULE

12 91931

STOP

91931

13 Model 3084 -- 91848

PLATFORM CAPACITY 1500 LBs (680kg)

91848

Model 2684 -- 92122

PLATFORM CAPACITY 1700 LBs (770kg)

92122

14 6873

HYDRAULIC OIL

15 9052

9052

16 92089

92089

17 90732

WARNING

DO NOT POWERWASH OR SPRAY ELECTRONIC COMPONENTS OR CONNECTORS. MOISTURE MAY CAUSE DAMAGE AND/OR ERRATIC OPERATION

90732

18 90750

BATTERY CHARGER

90750

19 91956

BATTERY CHARGER INDICATOR

	YELLOW	80%	100%	FAULT
No AC power to charger	OFF	OFF	OFF	OFF
Normal operation, charger is charging	ON	OFF	OFF	OFF
Normal, battery is over 80% charged	ON	ON	OFF	OFF
Normal, battery is 100% charged	OFF	OFF	ON	OFF

Please see service manual for additional information.

91956

20 90751

POWER TO PLATFORM

90751

POWER MODULE

21 8779

WARNING

BATTERIES PRODUCE EXPLOSIVE GAS. CHARGE BATTERIES IN WELL VENTILATED AREA

DO NOT EXPOSE TO SPARKS OR FLAMES.

8779

22 90726

WARNING

- EACH REPLACEMENT BATTERY MUST WEIGH A MINIMUM OF 60 POUNDS / 27.3 kg
- FAILURE TO MEET MINIMUM WEIGHT REQUIREMENT MAY CAUSE MACHINE INSTABILITY.

90726

CONTROL MODULE AND POWER MODULE

FRONT AND REAR

23 8502 (4 PLACES)
(not required for Foam Filled tires)

INFLATE TO TIRE MANUFACTURER'S MAX. SPECIFICATIONS OR SEE SERVICE MANUAL

8502

24 8519 (4 PLACES)

WARNING

- REPLACE TIRES WITH MANUFACTURER'S EQUIPMENT ONLY.
- FAILURE TO USE MANUFACTURER'S TIRES MAY CAUSE MACHINE INSTABILITY.
- REFER TO MAINTENANCE MANUAL FOR REPLACEMENT PART NUMBER.

8519

UPPER CONTROLS

25 90729

STEER
REVERSE UP
FORWARD DOWN
ENABLE BAR
ENABLE BAR MUST BE DEPRESSED DURING ALL FUNCTIONS.
-STEER-
LEFT RIGHT
MEC Aerial Platform Sales Corp.
1770 Park Street, Suite 77
Salina, California 93722
Phone: (800) 367-6070 (559) 834-2500 - Fax: 559-837-0193

90729

26 91934

STOP

91934

27 7156

FRONT

7156

28 91932

AUTO

91932

33 (4 PLACES)

Model 3084RT -- 91946

MAX 3175 lbs 1440 kg

91946

Model 2684RT -- 92229

MAX 3065 lbs 1390 kg

92229

BOOM

29 91870

GREASE PORT
(Slide to open)

91870

BASE

31 91553

MEC AERIAL WORK PLATFORMS UNIT 1, GREENFIELD BUSINESS PARK BACKLIT ROAD, GREENFIELD FLINTSHIRE CH6 7HJ UK

MFG. DATE XX/XX | MODEL NUMBER XXXXXX | SERIAL NUMBER XXXXXXXXXX | MODEL YEAR 20XX

MAX. PLATFORM CAPACITY INCLUDING PERSONS
XXX kg = X PERSONS + XXX kg EQUIPMENT
XXX kg = X PERSONS + XXX kg EQUIPMENT

ELECTRICAL VOLTAGE XX VOLTS | TYPE MEWP

MAX. DRIVE HEIGHT X.X FT X.X m | MACHINE WEIGHT XXXX LBS XXXX kg | MAX. MANUAL FORCE XXX LBS XXX N | TYPE MEWP | MAX. HYDRAULIC SYSTEM PRESSURE XXXX PSI XXXX bar

MAX. PLATFORM HEIGHT X X FT X.X m | MAX. WIND SPEED X MPH X m/s | MAX. GROUND PRESSURE PER WHEEL X.X PSI X.X kg/cm² | MAX. LOAD PER WHEEL XXX LBS XXX kg

THIS MACHINE HAS BEEN CONSTRUCTED IN ACCORDANCE WITH SECTION 4 OF ANSI A92.6-2006 COVERED BY US PAT. #5,476,050 & CANADIAN PAT. #2,115,870

91553

30 11026730 (4 PLACES)

ILLUSTRATION No.
ART_3248

Troubleshooting

WARNING

Should you experience erratic operation or notice any malfunction while operating this machine, discontinue use immediately.
Call for assistance and report the incident to your supervisor, and do not use the machine until it has been checked by a trained, qualified mechanic.

Machine functions will not operate

Lower Controls

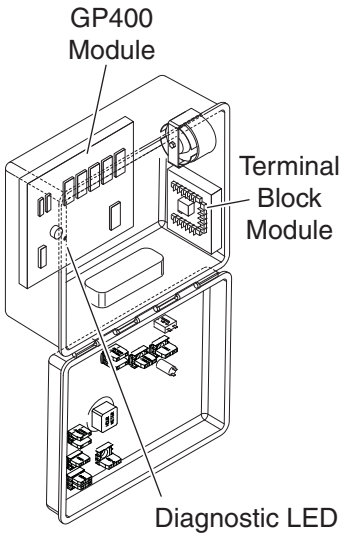

ART_3093

- Battery Disconnect Switch ON?
- Batteries fully charged?
- Function toggle switch or the enable switch not activated?
- Selector switch in proper position?
- Both EMERGENCY STOP switches reset?
- Hydraulic fluid level low?
- Obvious fluid leak or damaged component?
- Wires disconnected, broken, or loose?
- Motor control processor Diagnostic LED OFF?
  LED should be ON. If LED is OFF or FLASHING, refer to Service Manual or contact MEC Technical Support.

Serial Plate

Serial Plate Location

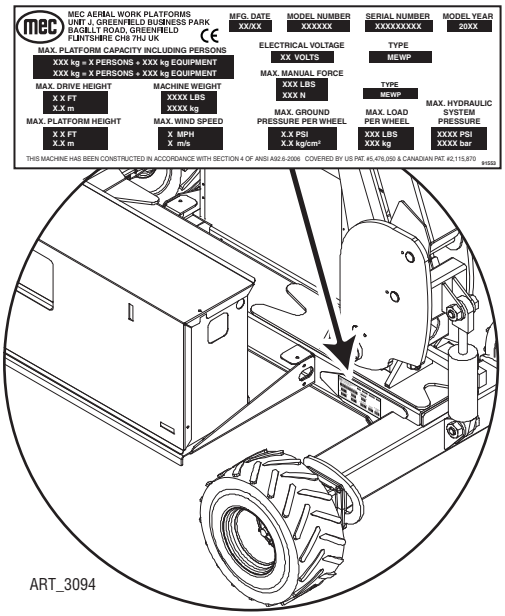

The serial plate is attached to the machine at the time of manufacture. Important information about the machine is recorded on the serial plate.

Serial Plate Item Information Defined

MFG DATE. Month / Year of manufacture

MODEL NUMBER. Identifies the machine.

SERIAL NUMBER. Identifies a machine with reference to its original owner. Refer to the number when requesting information or ordering parts.

MAX. WIND SPEED. The maximum safe wind speed at which the machine can be elevated.

MAX. PLATFORM CAPACITY INCLUDING PERSONS. The maximum safe load (persons + equipment) which can be evenly distributed on the platform at any elevation

MAX. ALLOWABLE MANUAL FORCE. The maximum safe force that the occupant can exert laterally on an object outside the platform.

MAX. PLATFORM HEIGHT. The maximum attainable height measured from level ground surface to platform floor.

MAX. DRIVE HEIGHT. The maximum safe platform height at which the machine can be driven.

TYPE. MEWP=Mobile Elevating Work Platform

MAX. LOAD PER WHEEL. The maximum safe weight applied to each wheel. Calculated with all available options installed.
Fw = 30% (Wm + Wc + Wopt)

MAX. GROUND PRESSURE PER WHEEL. The amount of pressure exerted on the surface at each wheel. Calculated with all available options installed.
Pmax = 30% (Wm + Wc + Wopt) / Contact Area

STANDARD MACHINE WEIGHT. The weight of the machine with no options.

OPTIONAL EQUIPMENT ADDS TO STANDARD MACHINE WEIGHT. The weight of installed optional equipment.

Transport and Lifting Instructions.

Safety Information

WARNING

This section is provided for reference and does not supersede any government or company policy regarding the loading, transport or lifting of MEC machinery.

Drivers are responsible for loading and securing machines, and should be properly trained and authorized to operate MEC machinery. Drivers are also responsible for selecting the correct and appropriate trailer according to government regulations and company policy. Drivers must ensure that the vehicle and chains are strong enough to hold the weight of the machine (see the serial number plate for machine weight).

Loading

Free-wheel configuration for Winching or Towing.

CAUTION

Prior to manually releasing brakes, be sure the wheels are chocked to prevent machine from moving.

DANGER

RUNAWAY HAZARD!
After releasing the brakes there is nothing to stop machine travel. Machine will roll freely on slopes.

The machine can be winched or towed short distances at speeds not to exceed 5 MPH (8.05 kph). Before towing or winching the machine, it is necessary to release the brakes. Reset the brakes after towing or winching.

Disengage Brakes before Towing or Winching

- Chock the wheels.
- Push and hold the release valve.
- Using the hand pump on the manifold, pump valve until pressure is built and valve cannot be pumped.
- Machine is now ready for towing.

Engage Brakes before Driving

- Pull out the manual brake release valve to reset brakes.

  Note: Brakes will reset automatically when drive function is activated.

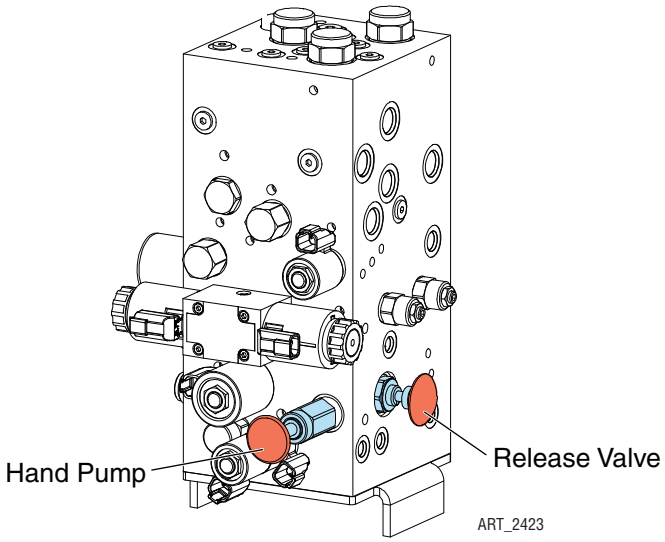

Driving or Winching onto or off of a Transport Vehicle

WARNING

MEC does not recommend unassisted loading or unloading.
Always attach the machine to a winch when loading or unloading from a truck or trailer by driving.
Read and understand all safety, control, and operating information found on the machine and in this manual before operating the machine.

- Attach the machine to a winch.
- Remove all machine tie downs. Remove wheel chocks.

Driving

- Turn the base key switch to PLATFORM. Check that the EMERGENCY STOP switch is reset by turning it clockwise.
- Enter the platform and reset the Platform EMERGENCY STOP switch.
- Test platform control functions.
- Carefully drive the machine off the transport vehicle with the winch attached.

  Note: The brakes are automatically released for driving and will automatically apply when the machine stops.

Winching

- Disengage brakes (see *Disengage Brakes before Towing or Winching* on page 39).
- Carefully operate the winch to lower the machine down the ramp.
- Chock the wheels and engage the brakes.

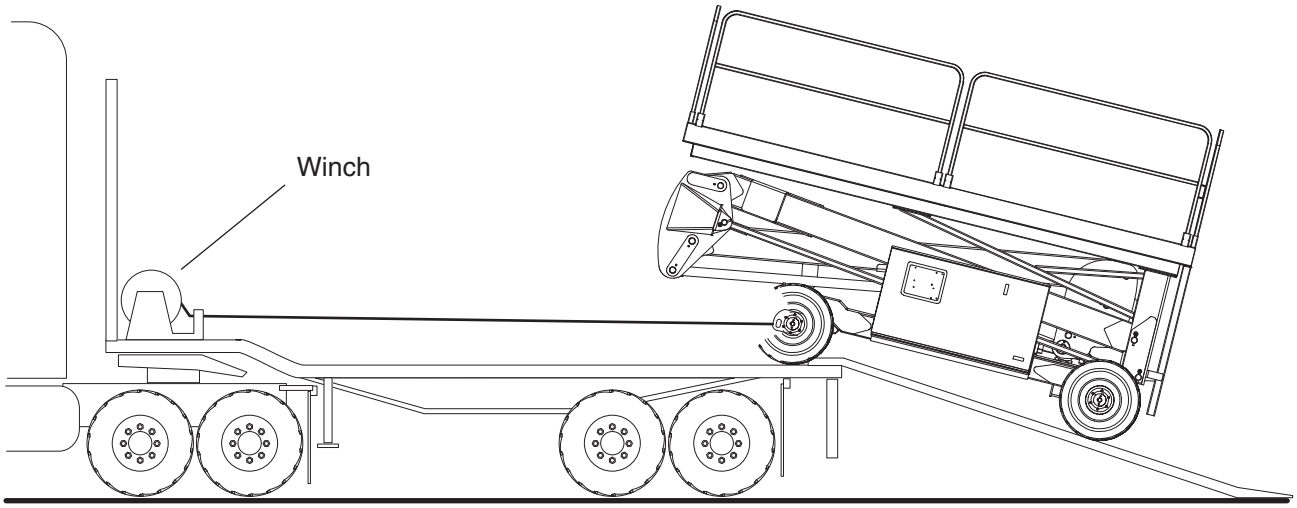

ART_3086

Lifting and Tie Down Instructions

WARNING

Only qualified riggers should rig and lift the machine.

Ensure that the crane capacity, loading surfaces and straps are sufficient to withstand the machine weight. See the serial plate for the machine weight.

- Fully lower the platform. Be sure the module doors are closed and secure. Remove all loose items from the machine.
- Fold down the guardrails.
- Determine the center of gravity of the machine.
- Attach rigging to the designated lift points *only*.
- Adjust the rigging to prevent damage to the machine and to keep the machine level.

Securing to Truck or Trailer for Transport

- Turn the key switch to OFF and remove the key before transport.
- Turn the battery disconnect switch to OFF before transport.
- Inspect the entire machine for loose or unsecured items.
- Use chains or straps of ample load capacity.
- Use a minimum of two (2) chains or straps.
- Adjust the rigging to prevent damage to the chains and the machine.

Center of Gravity and Lifting Points

Center of Gravity	X Axis	Y Axis
3084	45.89 in. / 116.57cm	16.31 in. / 41.43 cm

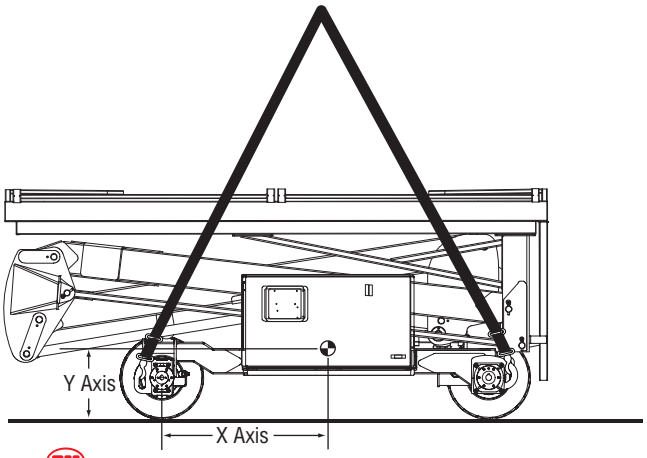

ILLUSTRATION No.
ART_3104

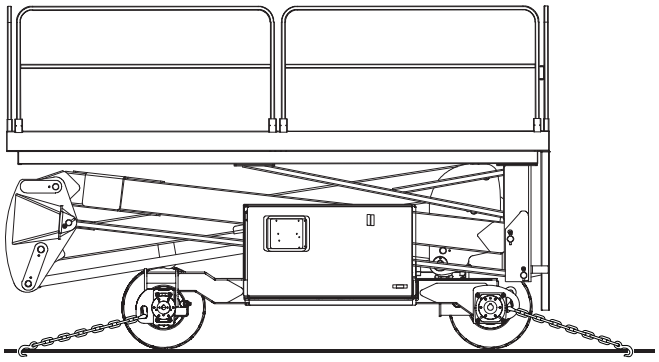

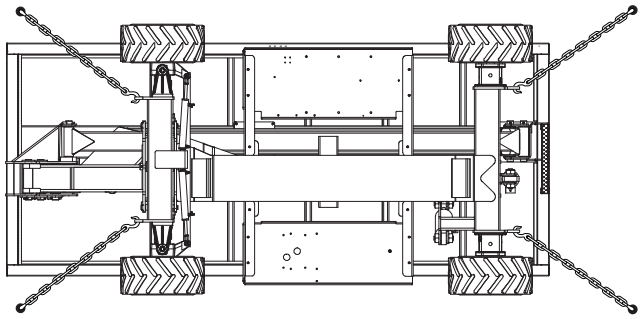

Notes

Notes

Notes

Limited Owner Warranty

MEC Aerial Platform Sales Corp. warrants its equipment to the original purchaser against defects in material and/or workmanship under normal use and service for one (1) year from date of registered sale or date the unit left the factory if not registered. MEC Aerial Platform Sales Corp. further warrants the structural weldments of the main frame and scissor arms to be free from defects in material or workmanship for five (5) years from date of registered sale or date unit left the factory if not registered. Excluded from such warranty is the battery(s) which carries a ninety (90) day warranty from described purchase date. Warranty claims within such warranty period shall be limited to repair or replacement, MEC Aerial Platform Sales Corp's option, of the defective part in question and labor to perform the necessary repair or replacement based on MEC Aerial Platform Sales Corp's then current flat rate, provided the defective part in question is shipped prepaid to MEC Aerial Platform Sales Corp. and is found upon inspection by MEC Aerial Platform Sales Corp. to be defective in material and/or workmanship. MEC Aerial Platform Sales Corp. shall not be liable for any consequential, incidental or contingent damages whatsoever. Use of other than factory authorized parts; misuse, improper maintenance, or modification of the equipment voids this warranty. The foregoing warranty is exclusive and in lieu of all other warranties, express or implied. All such other warranties, including implied warranties of merchantability and of fitness for a particular purpose, are hereby excluded. No Dealer, Sales Representative, or other person purporting to act on behalf of MEC Aerial Platform Sales Corp. is authorized to alter the terms of this warranty, or in any manner assume on behalf of MEC Aerial Platform Sales Corp. any liability or obligation which exceeds MEC Aerial Platform Sales Corp's obligations under this warranty.

MEC Aerial Platform Sales Corp.

1401 S. Madera Avenue, Kerman, CA 93630 USA Toll
Free: 1 - 877 - 632 - 5438
Phone: 1 - 559 - 842 - 1500
Fax: 1 - 559 - 842 - 1520
info@MECawp.com
www.MECawp.com