Service & Parts Manual

60-J Diesel

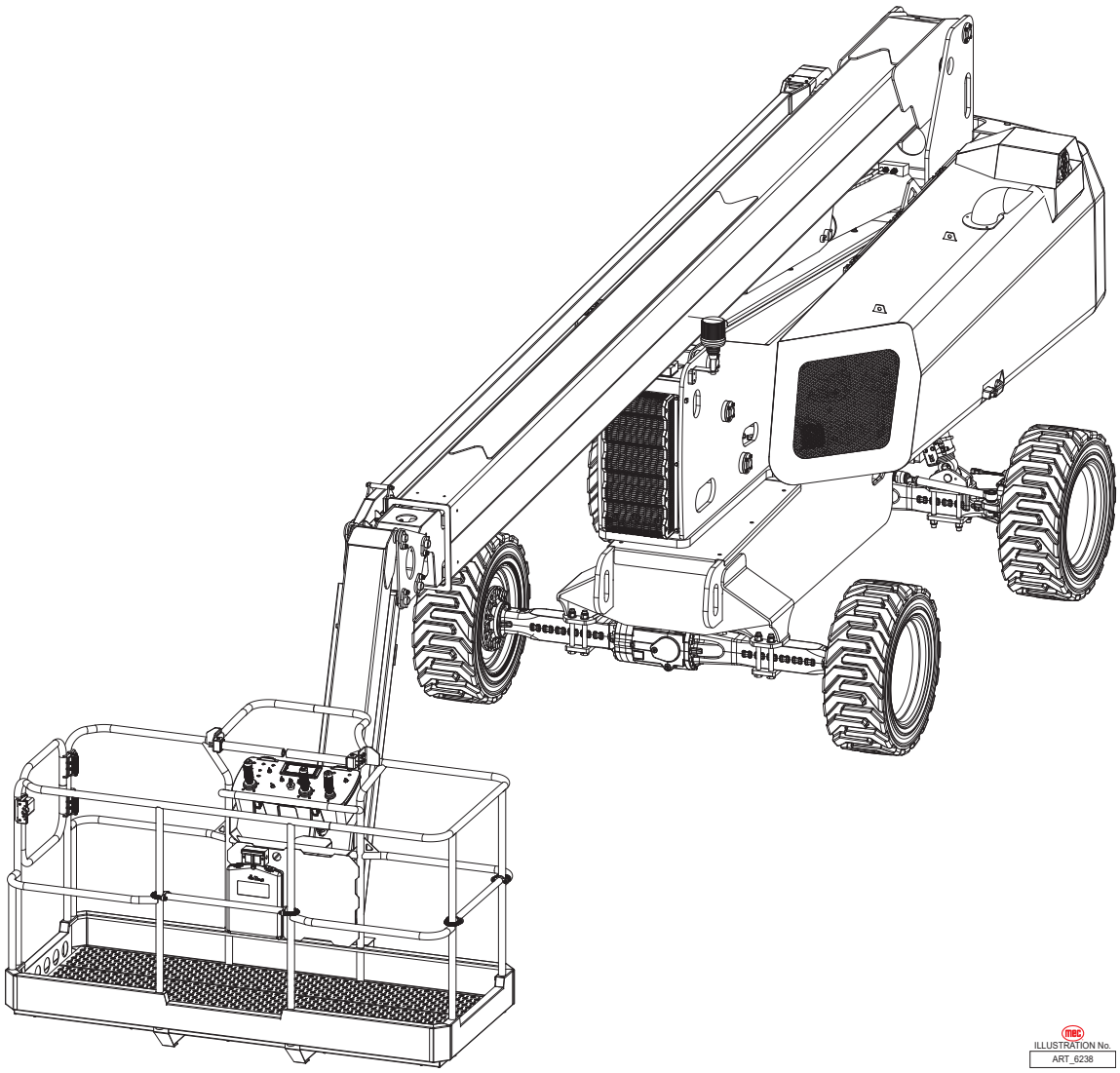

Meets requirements of ANSI A92.20-2020 and CSA B354.6-2019.

Serial Number Range 15600100 - Up

Part # 96727
April 2025

Revision History

Date	Reason for Update
November 2024	New Release
March 2025	Added 49365 on page 214. Added 49364 on page 216. Added 95503, 95081, and 95367 on page 76. Changed 48704 to 96836 on page 90. Added 96837 and 96982 on page 90.
April 2025	Added 48180 to page 122.

MEC Aerial Work Platforms

1401 S. Madera Avenue, Kerman, CA 93630 USA
Toll Free: 1-877-632-5438
Phone: 1-559-842-1500
Fax: 1-559-842-1520
info@MECawp.com
www.MECawp.com

Table of Contents

Chapter 1 - Service 1
Service Introduction 1

Section 1 - MEC Operator Policy 2
MEC Operator Policy 2

Section 2 - Safety Symbols & General Safety Tips 3
Safety Symbols & General Safety Tips 3

Section 3 - Torque Specifications 4
Bolt Torque Specification - American Standard 4
Bolt Torque Specification - Metric Standard 5
Hydraulic Components Torque Table 6

Section 4 - Specifications 7
Specifications 7

Section 5 - Boom Assembly Support 8
Supporting the Boom Assembly 8

Section 6 - Machine Systems 9
Machine Systems 9

Section 7 - Machine Components 10
Component Locations 10

Section 8 - Emergency Systems and Procedures 11
Emergency Systems and Procedures 11
Auxiliary Power System & Test 12

Section 9 - Transporting and Lifting Instructions 14
Transport and Lifting Instructions 14

Section 10 - Maintenance 17
Maintenance 17
Daily Maintenance 18
Biweekly Maintenance 22
Quarterly Maintenance 25
Semi-annual Maintenance 27
Yearly Maintenance 30
1,500 Hour Maintenance 34
Two Year Maintenance 35

Section 11 - Schematics. 36
Electrical Schematic, Lower Controls, Perkins Engine 36
Electrical Schematic, Chassis, Perkins Engine 37
Electrical Schematic, Upper Controls, Perkins Engine 38
Electrical Schematic, Lower Controls, Kubota Engine. 39
Electrical Schematic, Chassis, Kubota Engine 40

Electrical Schematic, Upper Controls, Kubota Engine. 41
Hydraulic Schematic, Part 1 42
Hydraulic Schematic, Part 2 43

Chapter 2 - Parts 45
Parts Introduction 45

Section 12 - Chassis. 46
Axle Installations 46
Axle Lockout Cylinder Installations 48
Tire and Wheel Installations 50
Slewing Ring Installations 52
Rotary Coupling Installations 54
Front Axle Accessory 56
Rear Axle Accessory 58
Chassis Manifold Assembly 60
Oscillate Manifold Assembly 62

Section 13 - Turntable 64
Gearmotor Installation 64
Kubota Engine Support Installation 66
Kubota Engine Assembly 68
Kubota Engine Cooling System Installation 1 70
Kubota Engine Cooling System Installation 2 72
Kubota Engine and Pump Installation 74
Kubota Engine Fuel System Installation 76
Kubota Engine Suction System Installation 78
Kubota Engine Exhaust System Installation 80
Kubota Engine Fuse Installation 1. 82
Kubota Engine Fuse Installation 2. 84
Kubota Engine Fuel Tank Installation 86
Perkins Engine Support Installation 88
Perkins Engine Assembly 90
Perkins Engine Cooling System Installation 1 92
Perkins Engine Cooling System Installation 2 94
Perkins Engine and Pump Installation. 96
Perkins Engine Fuel System Installation 98
Perkins Engine Suction System Installation 100
Perkins Engine Exhaust System Installation 102
Perkins Fuse Installation 1. 104
Perkins Fuse Installation 2. 106
Perkins Fuel Tank Installation 108
PVG Valve Block Installation 110
PVG Valve Block Assembly 112
Hydraulic Generator Assembly 114
Hydraulic Generator Manifold Assembly 116
Hydraulic Support Installation 1 118
Hydraulic Support Installation 2 120
Hydraulic Tank Installation. 122
Turntable Accessories Installations 1 124

Turntable Accessories Installations 2 126
Counterweight Installation 128
Turntable Hood Installations 130
Turntable Control Hood Accessories 132
Turntable Engine Hood Accessories 134
Slewing Ring Gear Lubrication System 136

Section 14 - Boom 138
Linkage Installation 1 138
Linkage Accessory Installation 1 140
Linkage Installations 2 142
Linkage Accessory Installation 2 144
Lifting Cylinder Assembly Installation 146
Telescopic Boom 148
Base Boom Sliding Block Installation 150
Second Boom Sliding Block Installation 152
Boom Shield Installation 154
Telescopic System Installation. 156
Carrier System Installation 1 158
Carrier System Installation 2 160
Jib Leveling Cylinder Installation 162
Telescopic Boom Installation 164
Jib Components Assembly 166
Platform Rotator Installation 168
Jib Valve Block Installation 170
Jib Valve Manifold Assembly 172

Section 15 - Platform 174
Platform Components 174
Platform Entry Gate Assembly. 176
Platform Lifting Gate Assembly 178
Platform Secondary Guarding Assembly 180

Section 16 - Cylinder 182
Axle Lockout Cylinder Assembly 182
Lower Lifting Cylinder Assembly 184
Lifting Cylinder Assembly 186
Telescopic Cylinder Assembly 188
Jib Leveling Cylinder Assembly 190
Jib Lifting Cylinder Assembly 192

Section 17 - Hydraulic System 194
Chassis Circuit. 194
Turntable Circuit 196
Telescopic Boom Circuit 200
Jib Circuit 202

Section 18 - Electrical System 204
Kubota Engine Electrical Harness, Part 1 204
Kubota Engine Electrical Harness, Part 2 206

Perkins Engine Electrical Harness, Part 1 208
Perkins Engine Electrical Harness, Part 2 210
Power Distribution Module 212
Ground Control Box Assembly 214
Platform Control Box Assembly 216

Section 19 - Decals 218
Decals 218

Service Introduction

This Service section is designed to provide you, the customer, with the instructions needed to properly maintain the MEC self-propelled aerial work platform. When used in conjunction with the illustrated Parts section in this manual and the Operator's Manual (provided separately), this manual will assist you in making necessary adjustments and repairs, and identifying and ordering the correct replacement parts.

All parts represented here are manufactured and supplied in accordance with MEC quality standards. We recommend that you use genuine MEC parts to ensure proper operation and reliable performance.

To obtain maximum benefits from your MEC Aerial Work Platforms, always follow the proper operating and maintenance procedures. Only trained authorized personnel should be allowed to operate or service this machine. Service personnel should read and study the Operator's, and the Service and Parts Manuals in order to gain a thorough understanding of the unit prior to making any repairs.

MEC Operator Policy

Note: *The best method to protect yourself and others from injury or death is to use common sense. If you are unsure of any operation, **don't start** until you are satisfied that it is safe to proceed and have discussed the situation with your supervisor.*

Service personnel and machine operators must understand and comply with all warnings and instructional decals on the body of the machine, at the ground controls, and platform control console.

DANGER

MODIFICATIONS OF THIS MACHINE FROM THE ORIGINAL DESIGN AND SPECIFICATIONS WITHOUT WRITTEN PERMISSION FROM MEC ARE STRICTLY FORBIDDEN. A MODIFICATION MAY COMPROMISE THE SAFETY OF THE MACHINE, SUBJECTING OPERATOR(S) TO SERIOUS INJURY OR DEATH.

MEC's policies and procedures demonstrate our commitment to Quality and our relentless ongoing efforts towards Continuous Improvement, due to which product specifications are subject to change without notice.

Any procedures not found within this manual must be evaluated by the individual to assure oneself that they are "proper and safe."

Your MEC Aerial Work Platform has been designed, built, and tested to provide many years of safe, dependable service. Only trained, authorized personnel should be allowed to operate or service the machine.

MEC, as manufacturer, has no direct control over machine application and operation. Proper safety practices are the responsibility of the user and all operating personnel.

If there is a question on application and/or operation, contact MEC Aerial Work Platforms:

MEC Aerial Work Platforms

1401 S. Madera Avenue, Kerman, CA 93630 USA
Toll Free: 1-877-632-5438
Phone: 1-559-842-1500
Fax: 1-559-842-1520
info@MECawp.com
www.MECawp.com

Safety Symbols & General Safety Tips

MEC manuals and decals use symbols, colors and signal words to help you recognize important safety, operation and maintenance information.

DANGER	**RED and the word DANGER – Indicates an imminently hazardous situation which, if not avoided, will result in death or serious injury.**
WARNING	**ORANGE and the word WARNING – Indicates a potentially hazardous situation which, if not avoided, could result in death or serious injury.**
CAUTION	**YELLOW with alert symbol and the word CAUTION – Indicates a potentially hazardous situation which, if not avoided, may result in minor or moderate injury.**
CAUTION	**YELLOW without alert symbol and the word CAUTION – Indicates a potentially hazardous situation which, if not avoided, may result in property damage.**
NOTICE	**GREEN and the word NOTICE – Indicates operation or maintenance information.**

Regular inspection and constant maintenance is the key to efficient economical operation of your aerial work platform. It will help to assure that your equipment will perform satisfactorily with a minimum of service and repair.

The actual operating environment of the machine governs the inspection schedule. Correct lubrication is an essential part of the preventative maintenance to minimize wear on working parts and ensure against premature failure. By maintaining correct lubrication, the possibility of mechanical failure and resulting downtime is reduced to a minimum.

- Never leave hydraulic components or hoses open. They must be protected from contamination (including rain) at all times.
- Never open a hydraulic system when there are contaminants in the air.
- Always clean the surrounding area before opening hydraulic systems.
- Use only recommended lubricants. Improper lubricants or incompatible lubricants may be as harmful as no lubrication.
- Watch for makeshift “fixes” which can jeopardize safety as well as lead to more costly repair.

Bolt Torque Specification - American Standard

Fasteners

Use the following values to apply torque unless a specific torque value is called out for the part being used.

American Standard Cap Screws								
SAE Grade	**5**				**8**			
Cap Screw Size (Inches)								
	Torque				**Torque**			
	Ft-lbs		**Nm**		**Ft-lbs**		**Nm**	
	Min	**Max**	**Min**	**Max**	**Min**	**Max**	**Min**	**Max**
1/4 - 20	6.25	7.25	8.5	10	8.25	9.5	11	13
1/4 - 28	8	9	11	12	10.5	12	14	16
5/16 - 18	14	15	19	20	18.5	20	25	27
5/16 - 24	17.5	19	12	26	23	25	31	34
3/8 - 16	26	28	35	38	35	37	47.5	50
3/8 - 24	31	34	42	46	41	45	55.5	61
7/16 - 14	41	45	55.5	61	55	60	74.5	81
7/16 - 20	51	55	69	74.5	68	75	92	102
1/2 - 13	65	72	88	97.5	86	96	116	130
1/2 - 20	76	84	103	114	102	112	138	152
9/16 - 12	95	105	129	142	127	140	172	190
9/16 - 18	111	123	150	167	148	164	200	222
5/8 - 11	126	139	171	188	168	185	228	251
5/8 - 18	152	168	206	228	203	224	275	304
3/4 - 10	238	262	322	255	318	350	431	474
3/4 - 16	274	302	371	409	365	402	495	544
7/8 - 9	350	386	474	523	466	515	631	698
7/8 - 14	407	448	551	607	543	597	736	809
1 - 8	537	592	728	802	716	790	970	1070
1 - 14	670	740	908	1003	894	987	1211	1137

Torque values apply to fasteners as received from the supplier, dry or when lubricated with normal engine oil.

If special graphite grease, molydisulphide grease, or other extreme pressure lubricants are used, these torque values do not apply.

Bolt Torque Specification - Metric Standard

Fasteners

Use the following values to apply torque unless a specific torque value is called out for the part being used.

Metric Cap Screws								
Metric Grade	**8.8**				**10.9**			
Cap Screw Size (Millimeters)								
	Torque				**Torque**			
	Ft-lbs		**Nm**		**Ft-lbs**		**Nm**	
	Min	**Max**	**Min**	**Max**	**Min**	**Max**	**Min**	**Max**
M6 × 1.00	6	8	8	11	9	11	12	15
M8 × 1.25	16	20	21.5	27	23	27	31	36.5
M10 × 1.50	29	35	39	47	42	52	57	70
M12 × 1.75	52	62	70	84	75	91	102	123
M14 × 2.00	85	103	115	139	120	146	163	198
M16 × 2.50	130	158	176	214	176	216	238	293
M18 × 2.50	172	210	233	284	240	294	325	398
M20 × 2.50	247	301	335	408	343	426	465	577
M22 × 2.50	332	404	450	547	472	576	639	780
M24 × 3.00	423	517	573	700	599	732	812	992
M27 × 3.00	637	779	863	1055	898	1098	1217	1488
M30 × 3.00	872	1066	1181	1444	1224	1496	1658	2027

Torque values apply to fasteners as received from the supplier, dry or when lubricated with normal engine oil.

If special graphite grease, molydisulphide grease, or other extreme pressure lubricants are used, these torque values do not apply.

Hydraulic Components Torque Table

Note: Always lubricate threads with clean hydraulic fluid prior to installation.

Use the following values to torque hydraulic components when a specific value is not available. Always check for torque values in the following places before relying on the Hydraulic Components Torque Table.

- Parts drawings and service instructions in this manual.
- Packaging and instruction sheets provided with new parts.
- Instruction manuals provided by the manufacturer of the component being serviced.

SAE Port Series	Cartridge Poppet		Fittings		Hoses	
	Ft-lbs	Nm	Ft-lbs	Nm	In-lbs	Nm
#4	N/A	N/A	N/A	N/A	135 - 145	15 - 16
#6	N/A	N/A	10 - 20	14 - 27	215 - 245	24 - 28
#8	25 - 30	31 - 41	25 - 30	34 - 41	430 - 470	49 - 53
#10	35 - 40	47 - 54	35 - 40	47 - 54	680 - 750	77 - 85
#12	85 - 90	115 - 122	85 - 90	115 - 122	950 - 1050	107 - 119
#16	130 - 140	176 - 190	130 - 140	176 - 190	1300 - 1368	147 - 155

Specifications

Work Height*		66.86ft	20.38m
Platform Height		60.30ft	18.38m
Maximum Drive Height		60.30ft	18.38m
Maximum Outreach		44.0ft	13.41m
Turntable Swing		360° Continuously	
Jib Range Of Motion		135°	
Platform Rotation		180° (90° Each Side)	
Machine Weight** (Unloaded)		20,106lbs	9,120kg
Lift Capacity		600lbs	272kg
Maximum Occupants		2 Person	
Stowed Height		8.46ft	2.58m
Overall Length		30.51ft	9.3m
Overall Width		8.03ft	2.45m
Tailswing		4.56ft	1.39m
Wheel Base		6.88ft	2.1m
Platform Details	Width	7.54ft	2.3m
	Depth	3.28ft	1.0m
	Entry	1 End Swing Gate, 2 Slide Bar Entries	
Turning Radius, Inside		5.11ft	1.56m
Ground Clearance		12.20in	0.31m
Lift Speed		50-60 seconds	
Extend Speed		40-50 seconds	
Jib Lift Speed		20-25 seconds	
Drive Speed (Proportional)	Stowed	3.7mph	6.0km/h
	Raised/Extended	0.6mph	1.1km/h
Gradeability	Stowed, Downhill	45% (24.2°)	
	Stowed, Uphill	45% (24.2°)	
Breakover Angle		40% (22°)	
Axle Oscillation		10° (5° Each Side)	
Maximum Wind Speed		28 mph	12.5 m/sec (45 km/h)
Engine		Perkins 404F-E22T or Kubota D1803	
Fuel Type		Diesel	
Fuel Capacity		33.02gal	125L
Hydraulic Fluid Capacity		39.62gal	150L

Meets requirements of ANSI A92.20-2020 and CSA B354.6-2019.
Allowable ambient temperature range: -20°F to 120°F (-29°C to 49°C).
Consult with MEC for operation outside of this range.
* Working Height adds 6 feet (2 meters) to platform height.
**Weight may increase with certain options.

Supporting the Boom Assembly

WARNING **NEVER perform work under the boom assembly with the platform elevated without first supporting the boom assembly.**

CAUTION **Be careful to avoid pinching any electrical harnesses or hydraulic lines.**

DO NOT work beneath the boom assembly with the platform elevated unless the boom assembly is properly supported.

Use a sling and overhead hoist rated for 3 tons (2,700 kg) or more.

Thread the sling through the opening in the boom post as shown below. Connect it to the overhead hoist, then lift enough that the weight of the boom assembly is being supported by the hoist.

BEWARE OF CABLE TRACK WHEN THREADING THE SLING ON THE BOOM!

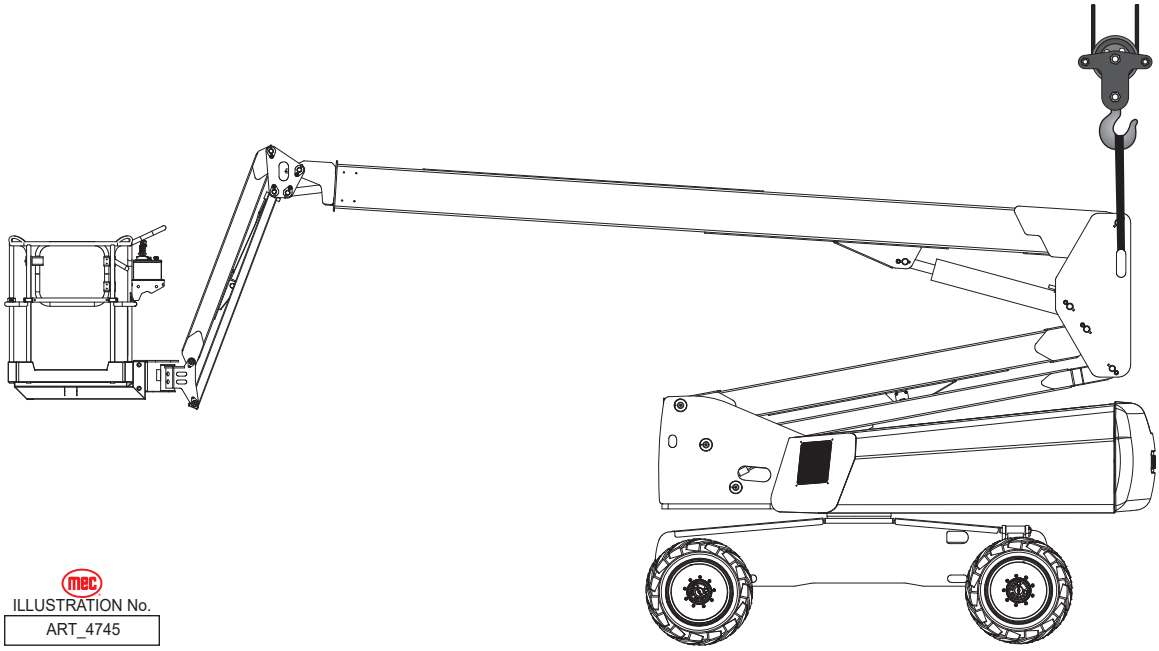

ILLUSTRATION No.
ART_4745

Machine Systems

Hydraulic System

WARNING

HYDRAULIC FLUID UNDER PRESSURE CAN PENETRATE AND BURN SKIN, DAMAGE EYES, AND MAY CAUSE SERIOUS INJURY, BLINDNESS, AND EVEN DEATH. CORRECT LEAKS IMMEDIATELY.

CAUTION

Hydraulic fluid leaks under pressure may not always be visible. Check for pin hole leaks with a piece of cardboard, not your hand.

Electrical System

CAUTION

Prevent damage to battery and/or electrical system;

- **Always disconnect the negative battery cable first.**
- **Always connect the positive battery cable first.**

When the negative cable is installed, a spark will occur if contact is made between the positive side of the battery and a metal surface on the machine. This can cause damage to the electrical system, battery explosion, and personal injury.

Total System

WARNING

ENGINE COOLANT LEVEL MUST BE CHECKED ONLY AFTER ENGINE HAS COOLED. IF RADIATOR CAP IS REMOVED WHILE THE COOLANT IS AT NORMAL OPERATING TEMPERATURE, PRESSURE WITHIN THE COOLANT SYSTEM WILL FORCE HOT LIQUID OUT THROUGH THE FILLER OPENING AND MAY CAUSE SEVERE SCALDING.

FAILURE TO PERFORM PREVENTIVE MAINTENANCE AT RECOMMENDED INTERVALS MAY RESULT IN THE UNIT BEING OPERATED WITH A DEFECT THAT COULD RESULT IN INJURY OR DEATH OF THE OPERATOR.

IMMEDIATELY REPORT TO YOUR SUPERVISOR ANY DEFECT OR MALFUNCTION. ANY DEFECT SHALL BE REPAIRED PRIOR TO CONTINUED USE OF THE AERIAL WORK PLATFORM.

INSPECTION AND MAINTENANCE SHOULD BE PERFORMED BY QUALIFIED PERSONNEL FAMILIAR WITH THE EQUIPMENT.

Component Locations

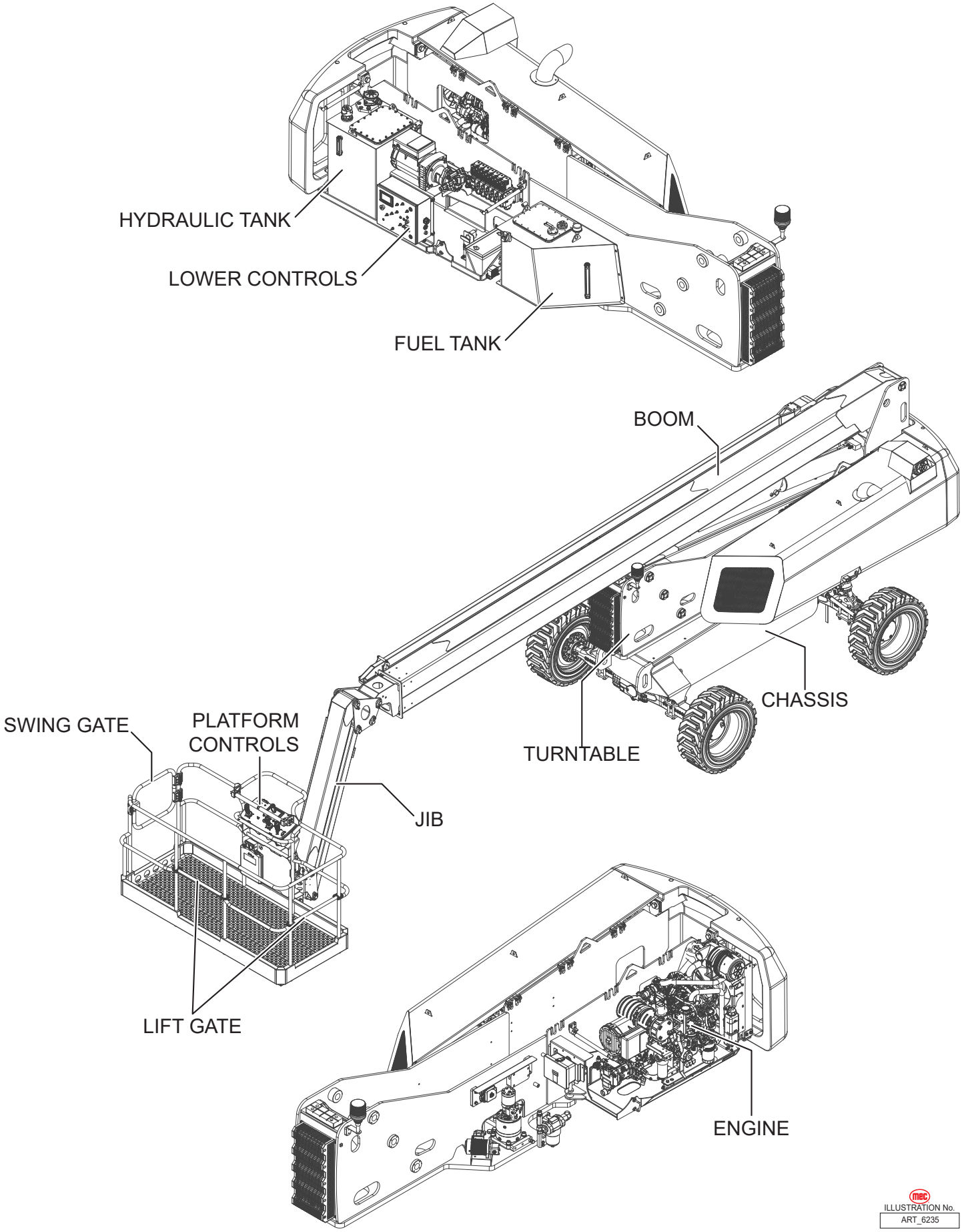

Emergency Systems and Procedures

WARNING

IF THE CONTROL SYSTEM FAILS WHILE THE PLATFORM IS ELEVATED, HAVE AN EXPERIENCED OPERATOR USE THE EMERGENCY LOWERING PROCEDURE TO SAFELY LOWER THE PLATFORM.

DO NOT ATTEMPT TO CLIMB DOWN ELEVATING ASSEMBLY.

Emergency Stop

The machine is equipped with an Emergency Stop switch on both control panels.

- Press the Emergency Stop switch at any time to stop all machine functions.
- Pull the button to reset it.

Selector Switch set to Platform

- Either switch will stop all machine functions.
- Both switches must be reset or machine will not operate.

Selector Switch is set to Base

- The upper controls are locked out.
- The lower controls switch must be reset or the machine will not operate.
- The machine will operate from the lower controls if the upper controls switch is tripped.



ART_3353

Auxiliary Power System & Test

If primary power fails while the platform is elevated, use the Auxiliary Power System to safely lower the platform.

WARNING

Do not climb down the boom assembly or exit the platform while elevated.

ALWAYS check over, under and around the machine for personnel, structures and obstructions before activating any control function and continue to watch for hazards while operating the machine.

Platform Controls



Upper Auxiliary Power Switch

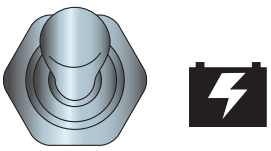

Auxiliary Power Switch

Base Controls

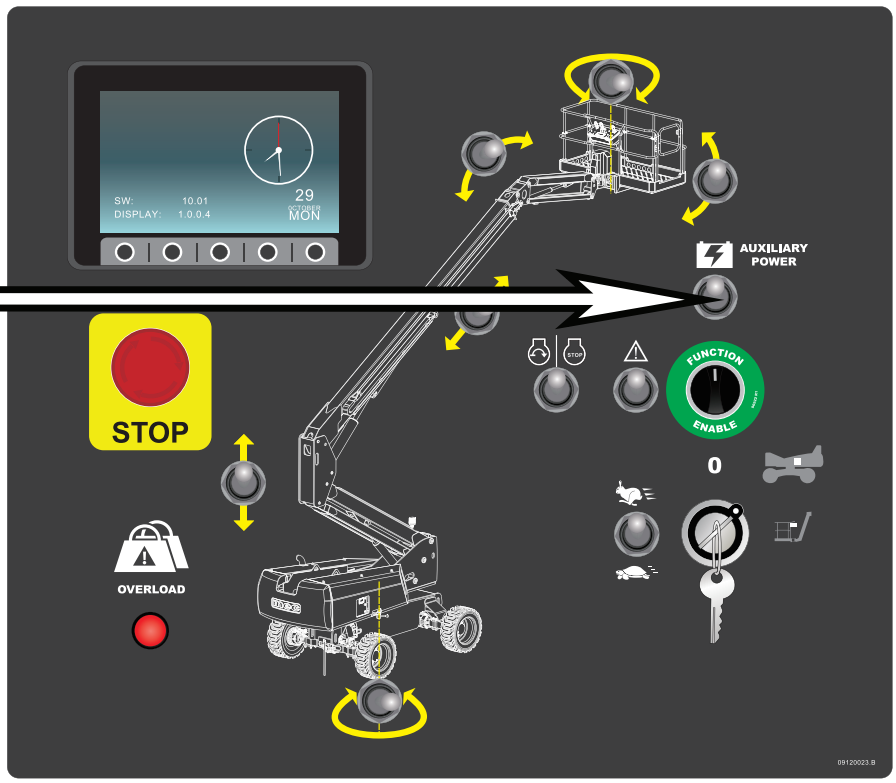

Lower Auxiliary Power Switch

ILLUSTRATION No.
ART_5793

The Auxiliary Power System is used to lower the platform in case of primary power failure. To lower the platform, activate the Auxiliary Power Switch to run the auxiliary hydraulic pump.

This function uses battery power from the auxiliary battery to lower the platform.

- Push and hold the Auxiliary Power Switch, then use the Boom Extend/Retract function to retract the boom.
- Continue to hold the Auxiliary Power Switch, then use the Boom Lift/Lower function to lower the boom.

Note: The Auxiliary Power System is disabled when the engine is running.

Note: The Auxiliary Power Switch serves as an enable switch. It is not necessary to use the primary function enable switch.

Transport and Lifting Instructions

Safety Information

This section is provided for reference and does not supersede any government or company policy regarding the loading, transport or lifting of MEC machinery.

WARNING

Truck drivers are responsible for loading and securing machines, and should be properly trained and authorized to operate MEC machinery. Drivers are also responsible for selecting the correct and appropriate trailer according to government regulations and company policy. Drivers must ensure that the vehicle and chains are strong enough to hold the weight of the machine (see the serial number plate for machine weight).

ONLY properly trained and qualified operators shall load and unload this machine. While loading and unloading, the transport vehicle must be parked on a level surface and secured to prevent rolling.

Free-wheel configuration for Winching or Towing

RUNAWAY HAZARD!

DANGER

After releasing the brakes there is nothing to stop machine travel. Machine will roll freely on slopes.

ALWAYS chock the wheels before manually releasing the brakes.

Before towing or winching the machine, it is necessary to release the brakes. Reset the brakes after towing or winching. The machine can be winched or towed short distances at speeds not to exceed 6.2mph (10km/h).

Disengage Brakes before Towing or Winching

Make sure the machine is turned off before following these instruction otherwise hydraulic oil will be spilled!

1. Go to the rear axle of the machine and using the illustration as reference, remove the specified screw and remove the brake pad inside.
2. Put the screw back in place and tighten it to disengage the brakes.
3. Go to the Drive Pump and disconnect the hoses connected to Port A and Port B.
4. Cap both Port A and Port B! Connect the two hoses together via a special fitting.

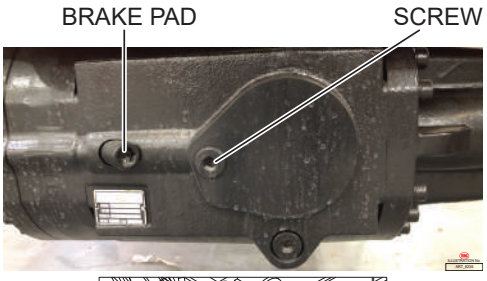

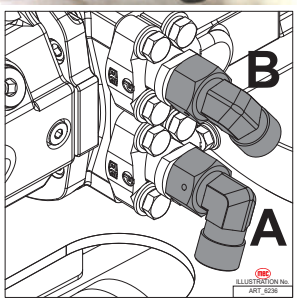

Engaging the Rotation Lock

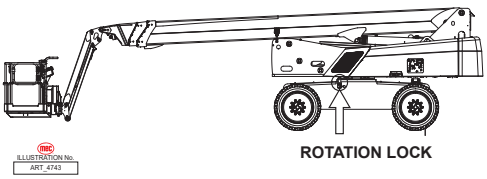

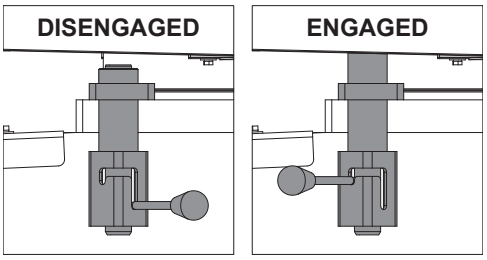

Before transport, rotate the turntable so that the locking hole aligns with the Rotation Lock located on the chassis. The lock holes are located on the bottom of the Controls Module. The Rotation Lock is located on the chassis behind the left front wheel.

Lift the Rotation Lock using the attached pin, then rotate to the right and lower it into the shallow depression to engage. (See illustration.) Disengage the Rotation Lock before operation.

Securing the Chassis

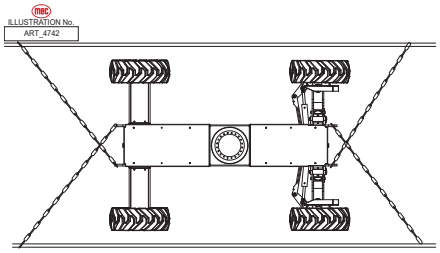

Make sure each of your chains is rated to hold the machine's weight (see serial number plate or Specifications). Use at least 4 chains.

Do not attach chain hooks directly to the machine. Loop the chain through the tie-down point and connect the chain hook to the chain.

Be sure chains are arranged so that they do not damage the machine.

Securing the Platform

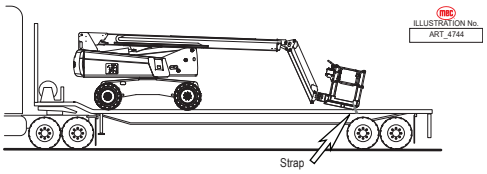

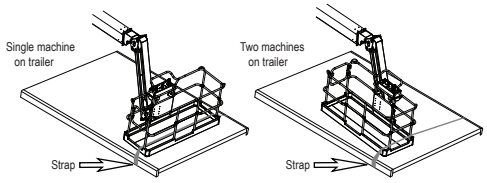

With the boom completely stowed, raise the jib slightly, then use the Platform Level function to lower the platform until the front of the platform touches the trailer surface.

Route the tie-down strap as shown through the width of the platform, over the toe boards of both side entry points. Tighten securely but do not over-tighten.

It may be necessary to turn the platform 90° when loading two machines on the same trailer. In this case, route the strap over the toeboard and through the end of the platform as shown.

Lifting Instructions

DANGER

Only qualified riggers should rig and lift this machine.

Ensure that the crane capacity, loading surfaces, chains, straps and slings are sufficient to withstand a machine weight of 30,000lbs (13,608kg).

Ensure that the platform is unloaded and that all material and tools have been removed. Ensure that the Rotation Lock has been engaged!

CAUTION **Be careful to avoid pinching any electrical harnesses or hydraulic lines.**

Attach lifting hooks as shown in the diagram. 2 hooks towards the platform end of the turntable and 2 hooks above the hoods towards the counterweight end of the turntable.

Carefully move electrical harness away from lifting hardware to prevent damage to the electrical system.

Adjust the lifting devices in such a way as to keep the machine level and without causing damage to it.

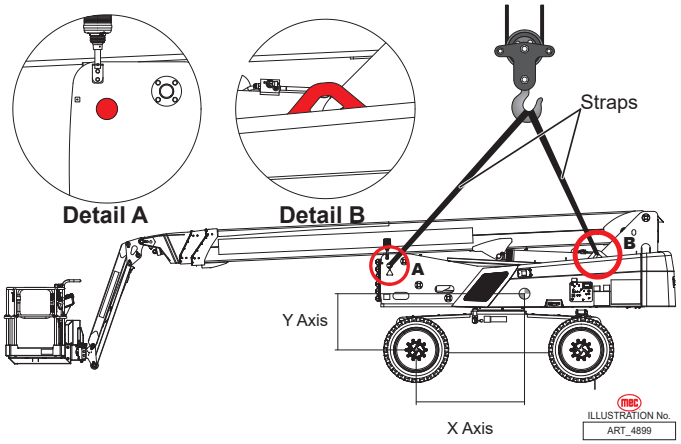

X-Axis	Y-Axis
55in (1,397mm)	33.4in (849mm)

Maintenance

Tag and remove a damaged, malfunctioning or modified machine from service. DO NOT use a damaged, malfunctioning or modified machine.

IMPORTANT: Scheduled maintenance inspection checklists are included in this manual for use only by qualified service technicians. Only qualified service technicians may perform repairs to the machine. After repairs are completed, the operator must perform a Pre-Start Inspection before proceeding to the Functions Test.

Hydraulic fluid under pressure can penetrate and burn skin, damage eyes, and may cause serious injury, blindness, and death. Repair leaks immediately. Fluid leaks under pressure may not always be visible. Check for pin hole leaks with a piece of cardboard, not your hand.

NEVER perform work under the boom assembly with the platform elevated without first supporting the boom assembly.

WARNING

Failure to perform scheduled maintenance at recommended intervals may result in injury or death. Keep maintenance records current and accurate.

Immediately report any damage, defect, unauthorized modification or malfunction to your supervisor. Any defect must be repaired prior to continued use. DO NOT use a damaged, modified or malfunctioning machine.

DO NOT hang anything over any control handle at any time.

Never leave hydraulic components or hoses open. Plug all hoses and fitting immediately after disassembly to protect the system from outside contamination (including rain).

Never open a hydraulic system when there are contaminants in the air.

Always clean the surrounding area before opening hydraulic systems.

CAUTION

Use only recommended lubricants. Improper lubricants or incompatible lubricants may cause as much damage as no lubrication.

Watch for makeshift “fixes” which can jeopardize safety as well as lead to more costly repair.

Inspection and maintenance should be performed by qualified personnel familiar with the equipment.

Daily Maintenance

The following maintenance should be done daily or every 10 hours of operation, whichever comes first.

1) Inspect the Machine

To ensure the maximum operating life of the machine, thoroughly inspect the machine before starting the machine.

1. Look around and under the machine, checking to make sure that there are none of the following:
   - Loose, rusty, missing or damaged hardware
   - No accumulated dirt or debris
   - Leaking oil, fuel, and other liquids
   - Broken or worn parts
2. Check the state of the machine and hydraulic components.
3. Check the condition of the tires and replace them if necessary.
4. Check the oil, coolant, and other fluid levels and refill if necessary.
5. Remove all accumulated dirt and debris. Carry out all the repairs needed before starting up the machine.
6. Check the state of the battery for corrosion and cleaning, and the current charge capacity is shown on the diagnostic panel.

2) Check the Engine oil level

WARNING

Do not check with the engine running!
Do not smoke or have open flames nearby!
Danger of burns!

When working on the oil system, make sure to keep the oil system and nearby areas clean and to keep them thoroughly clean from time to time. Dry any damp areas with air jets. When handling engine oil, make sure to follow all rules and regulations.

Make sure to properly dispose of any used engine oil and filter elements. Do not let the used engine oil spread on the ground. Run a test cycle after replacing. Also make sure that the sealing and pressure of the engine oil is correct and at the correct level.

An insufficient or excessive amount of engine oil level can damage the engine. Make sure that the machine is parked on a flat, level surface and is turned off before checking the engine oil level. Check the engine oil level only while it is warm, 5 minutes after the engine is turned off.

Do not remove the engine oil level rod with the engine running! Danger of burns!

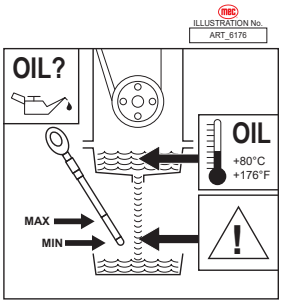

1. Remove the level rod and wipe it clean with a cloth, do not leave fibers. Insert the oil rod up to the stop, remove it and read the engine oil level.
2. The oil level must be between the MIN and MAX level. If necessary, add additional engine oil to reach the MAX level.

3) Check the Coolant level

WARNING

The coolant is pressurized and at a high temperature when the engine is turned on. When the tank cap is removed, the coolant liquid may flow out violently and cause serious burns. Make sure the engine is cold before working on the cooling system.

1. Make sure that the machine is parked on a flat, level surface.
2. Open the engine hood and use the illustration as a reference.
   - For machines with the Kubota Engine, the coolant bottle is easily visible next to the radiator.
   - For machines with the Perkins Engine, the engine tray must be pulled out to access the coolant bottle next to the radiator.
3. Check the level on the coolant tank placed above the radiator. The fluid level is correct when it is half-way on the inspection window.
4. Open the tank and check the coolant additive concentration ratio using the necessary instrument (e.g. hydrometer, refractometer).
5. If necessary, add more coolant of the correct type until the level indicator shows that the fluid level is in the middle.
6. Put the cap back on and make sure it is tightened properly. Run the engine to bring the coolant up to the required temperature. Switch off the engine and check for any leaks in the hoses. Repair any leaks found.

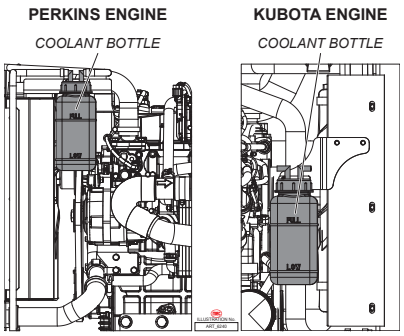

4) Check the Telescopic Boom sliding blocks

1. Extend the telescopic boom completely.
2. Check to make sure that the boom movement is smooth and that there are no abnormal vibrations, unusual noises, and no part of the boom gets heated due to friction during the movement.
3. Remove the dust guard gaskets located at the head of the extensions and make sure that there is a sufficient layer of grease on the sliding surfaces and on the sliding blocks. For instructions on lubricating the Telescopic Boom sliding blocks, see page 22.

5) Auxiliary Power Test

If the machine engine is running, press the red Emergency Stop Switch to stop the engine, and then pull the red Emergency Stop Switch out to reset it.

Press up and hold the Auxiliary Power Switch while testing the controls of the boom and platform. After making sure that all the functions work properly, release the switch to stop using auxiliary power.

Note: To avoid draining the batteries, limit the test duration time.

6) Check the Overload Sensor

It's important to make sure that the overload sensor is in good condition before using the machine. The overload sensor in the platform will show how much weight is in the platform on the diagnostic

panel. If the weight in the platform does not exceed the rated load, the machine is safe to operate and will function properly.

If the weight exceeds the rated load, the machine will stop operating and the alarm will beep. The diagnostic panel will state that the weight in the platform is over the rated amount and to remove excess weight. Once the excess weight has been removed, the machine will operate normally. Check to make sure that none of the bolts are missing, rusty, damaged, or loose and that the overload sensor is undamaged.

If the platform is damaged in any way, stop working and make sure to check that the overload sensor is undamaged using the following procedure:

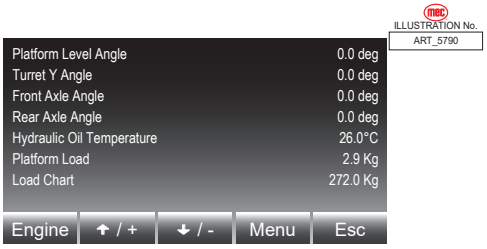

1. Information on the machine's current operating status can be found by pressing down the black button under the Data icon shown on the diagnostic panel.
2. The Load Chart parameter shows the current load in the platform.
3. The Load Chart parameter will show 0lbs (0kg) when the load in the platform is removed completely.
4. The Load Chart parameter will show 600lbs (272kg) at the moment of 600lbs (272kg) being added in the platform.
5. Continue to add weight in the platform, and then the alarm will be activated when the weight is up to 750lbs (340kg). If the alarm does not activate, the machine must be repaired.
6. The accuracy of weighting is ±10%. If the data exceeds it, stop to calibrate it, referring to the page 33.

7) Check the Counterweight bolts

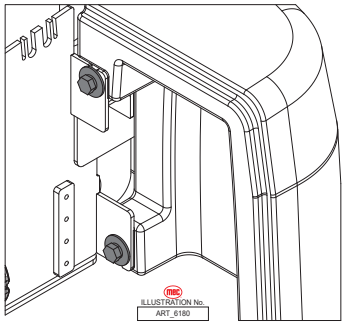

The counterweight bolts holding the counterweight to the boom turret are vital to balancing the machine.

Check to make sure that the hardware is not missing, damaged, rusty or loose. Replace any defective hardware.

8) Check the Secondary Guarding

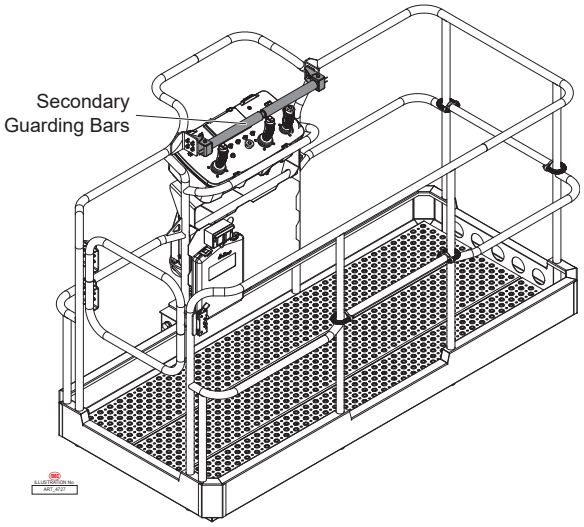

1. As a safety feature, there are 2 yellow colored swinging bars positioned above the Platform controls. If one or both bars are pushed forward, all machine functions will stop immediately sounding an alarm.
2. If at any time one or both bars are depressed, evaluate the instance that caused the actuation and proceed accordingly with choice 3 or 4.
3. To reset the system, allow the bars to return to the natural centered position, return all control handles to neutral position and release all enable trigger switches. Normal operation may be resumed.

4. To enable limited operation while one or both bars are depressed, push up and hold the Emergency Platform Bypass switch (see illustration to right). While holding the Bypass switch, select the desired function and operate it in the normal procedure. Certain lift functions such as Riser Boom Up, Main Boom Up, and Telescope out are not available in this bypass mode.
5. If normal operation doesn't resume, please contact Product Support for assistance.

ILLUSTRATION No.
ART_6097



Emergency Platform Bypass Switch

Biweekly Maintenance

The following maintenance should be done every 2 weeks or every 50 hours of operation, whichever comes first.

1) Lubricate the Axles

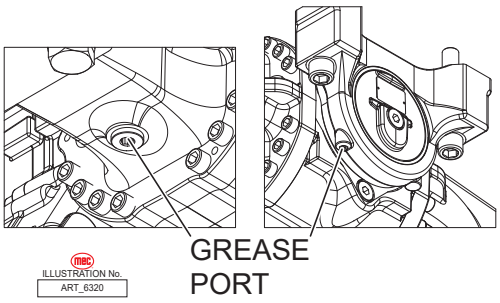

1. Make sure that the machine is parked on a flat, level surface. Keep the work area clear of any debris and unauthorized personnel.
2. Stand near the front axle oscillation bushes. Inject grease in the grease nipples present on both sides of the axle (front and back sides).
3. Repeat the lubrication for the rear axle.

Note: Lubricate during service cycles.

2) Check the Hydraulic oil level

To make sure that the machine works properly, make sure that the level of hydraulic oil in the hydraulic tank is sufficient. An incorrect level of oil in the hydraulic system can damage the components.

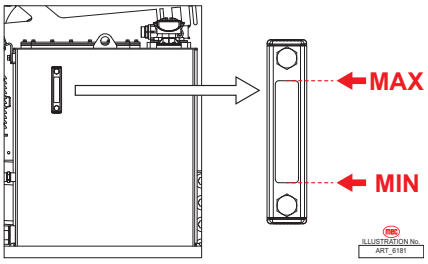

Daily inspections will make it possible to detect any changes in the oil level which could indicate the presence of faults in the hydraulic system.

1. Make sure that the machine is parked on a flat, level surface.
2. Make sure the main boom is fully retracted and stowed.
3. Check the oil level indicator on the side of the hydraulic tank.
4. If necessary, add additional hydraulic oil but do not exceed the maximum level!

Note: The hydraulic oil should be filtered with a 20-micron filter.

Result: The hydraulic oil level in the hydraulic system must be between the maximum level and minimum level.

3) Lubricate the Telescopic Boom sliding blocks

1. Make sure that the machine is parked on a flat, level surface with an area with sufficient clearance around it for boom functions.
   - Center the turret and fully lower the main boom, then fully extend the telescopic boom completely.
2. Remove the dust guard gaskets at the head of the boom extensions and clean all the sliding surfaces thoroughly.
3. Using a brush, apply a thin layer of grease on the sliding surfaces on all four sides of the boom. Repeat the operation for each stage of the extension.
4. Retract and extend the telescopic boom a number of times to distribute the grease uniformly.
5. Remove any excess grease to prevent dirt build-up and put the dust guard gaskets back on.

4) Drain water from Water-Fuel Separator

WARNING

Fuel is flammable and can cause severe burns and death.
Do not smoke or have open flames nearby while working on the fuel line.
Clean the engine parts and engine compartment to remove all traces of fuel to prevent risk of fire.

1. Make sure that the machine is parked on a flat, level surface.
2. Turn the engine off.
3. Place a suitable container underneath the Water-Fuel separator.
4. Disconnect the cables.
5. Loosen the drainage screw.
6. Drain the liquid until the pure diesel fuel starts flowing out.
7. Put the drainage cap back on and apply a tightening torque of 1.18±0.22ft-lb (1.6±0.3Nm).
8. Reconnect the cables.

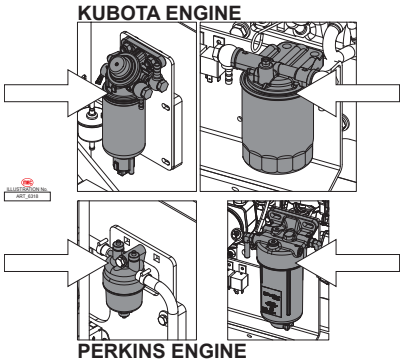

5) Lubricate the Turret Rotation Slewing Ring Gear

1. Apply grease manually to the outer teeth with a brush symmetrically and any remove excess grease.
2. After elevating the boom and removing the hood, keeping turning the turret and apply a moderate amount of grease into the raceway through the fitting as shown in the illustration with a greasing gun.

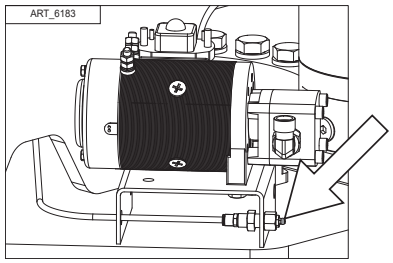

Grease Brand	For Raceway	For Gear Teeth
Shell	Gadus S2 V220 2	MALLEUS OGH
Mobil	Mobilux EP 2S	MOBILTAC 81
Castrol	SPHEEROL EPL 2	MOLLUB-ALLOY 970/2500-1
TotalEnergies	MULTIS EP 2	CERAN AD PLUS
FUCHS	LAGERMEISTER EP 2	CEPLATTYN KG 10 HMF

6) Check the Wheels nut torque

It is extremely important to apply and keep proper torque on the lug nuts. Ensuring that the lug nuts are properly torqued will prevent the lug nuts from coming loose.

Wheel nuts should be torqued after the first 50 hours of operation and after each wheel removal. Use a torque wrench to tighten the nuts. If you do not have a torque wrench, tighten the fasteners with a lug wrench, then immediately have a service garage tighten the lug nuts to the proper torque.

Over-tightening result in breaking the studs or permanently deforming mounting stud holes in the wheels. The proper procedure attaching wheels is as follows:

1. Set the torque wrench to 331.9ft-lb (450Nm).
2. Tighten nuts in the correct sequence as the image shows.

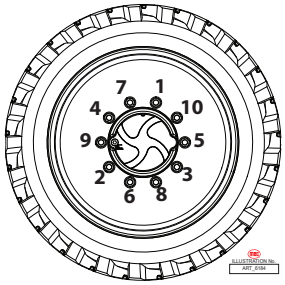

7) Lubricate the Steering elements

1. Lubricate the wheels rotation pins by injecting grease in the grease nipples provided for the purpose. Remove the excess grease.
2. Lubricate the ball joint by injecting grease in the grease nipples provided for the purpose. Remove the excess grease.

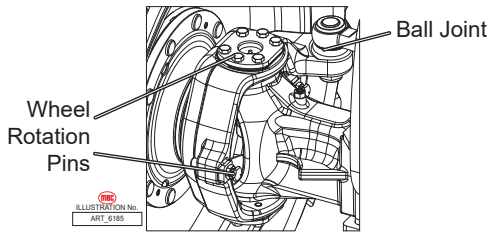

Note: Lubricate during service cycles.

Quarterly Maintenance

The following maintenance should be done every 3 months or every 250 hours of operation, whichever comes first.

1) Check the Transmission Belt

WARNING

Work on the transmission belt only when the engine has been turned off! After repairs, make sure all the protection devices have been fitted on and that no tool has been left on the engine.

Checking the Transmission Belt tension

1. To check the tension of the belts, lower the arm of indicator (1) in the tester.
2. Place the guide (3) between two pulleys on the V-belt (2). At this point, the stop must be on the side.
3. Press button (4) in the right hand corner with respect to V-belt (2) uniformly until the spring clicks audibly.
4. Lift the tester gently, without modifying the position of the indicator arm (1).
5. Read the value measured on the intersection point (arrow), scale (5) and indicator arm (1).

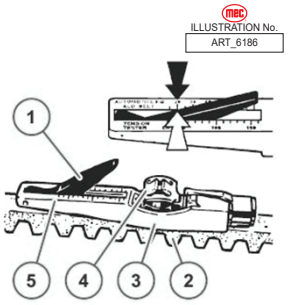

Correct the tension if necessary and repeat the measurement.

Replacing the Transmission Belt

To replace the transmission belt:

1. Loosen the screw and lock nut.
2. Move the generator above the adjuster wrench in direction (B) until the belt slackens.
3. Remove the belts and fit the new ones.
4. Reposition the generator above the adjuster wrench in direction (A) until the belt tension is correct.
5. Check the belt tension:
   - Before tensioning: 479.4±36.8ft-lb (650±50 Nm)
   - Correct tension: 295±36.8ft-lb (400 ± 50 Nm)
6. Tighten the screw and lock nut using the following torque:
   - Screw (1): 22.1ft-lb (30 Nm)
   - Screw (2): 30.9ft-lb (42 Nm)
   - Screw (3): 22.1ft-lb (30 Nm)

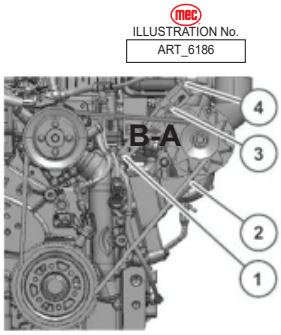

(1) Screw
(2) Screw
(3) Screw
(4) Adjuster Wrench

2) Check the Axle Differential oil

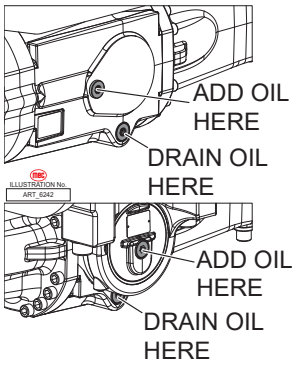

1. Make sure that the machine is parked on a flat, level surface. Keep the work area clear of any debris and unauthorized personnel.
2. Remove the axle oil level cap. The oil must flow out through the opening.
3. If necessary to speed up the process, remove the cap used to add oil. Once the oil has finished draining, tightly plug back in the oil drainage cap. Add oil to the correct level and then plug in the oil level cap. Clean the axle surfaces.
4. Repeat the operation for the front and rear axles.

Note: Lubricate during service cycles.

3) Check the Wheel Reduction Gears oil

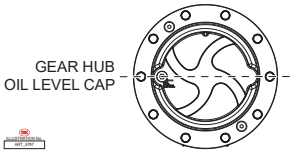

1. Make sure that the machine is parked on a flat, level surface. Keep the work area clear of any debris and unauthorized personnel.
2. Make sure that the gear hub is turned horizontally as the illustration to the right shows.
3. Remove the gear hub oil level cap. The oil level is correct when the oil flows out through the filler hole.
4. If necessary, add additional oil until it reaches the correct level.
5. Put the cap back on and ensure it fits snugly.
6. Repeat this operation for each wheel.

Note: Lubricate during service cycles.

4) Check the Turret Rotation Slewing Ring Gear Oil level

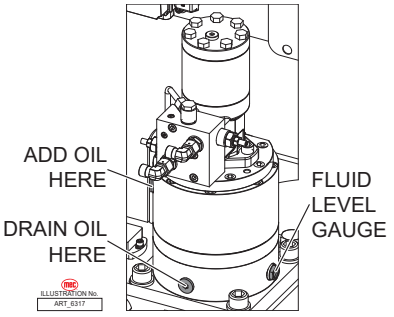

1. Open the control hood and if needed, rotate the turret for better access to the reduction gear.
2. Check the hydraulic fluid level through the inspection window. The level is correct when it overflows.
3. If necessary, add additional oil of the correct type up through the port used to add oil.

When checking the oil level, also check the hardware holding the reduction gear to the chassis for any signs of slack, rust, damaged or missing hardware.

5) Check the Gearbox oil

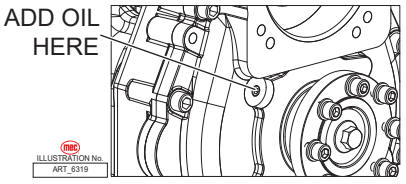

1. Make sure that the machine is parked on a flat, level surface. Keep the work area clear of any debris and unauthorized personnel.
2. Remove the axle oil level cap. The oil must flow out through the opening.
3. If necessary, add additional oil until it reaches the correct level. Plug the opening with the axle oil level cap. Clean the axle surfaces.

Note: Lubricate during service cycles.

Semi-annual Maintenance

The following maintenance should be done every 6 months or every 500 hours of operation, whichever comes first.

1) Replace the Hydraulic Oil filter

The machine use five filters for hydraulic fluid: Three WU filters for suction circuit are installed in the hydraulic tank, for driven pump, function pump and emergency pump. One is a PLFA series filters used in the pressure line of the hydraulic system. The last one is return oil filter placed on the hydraulic tank.

Wu Filters - Hydraulic Tank

1. Open the control hood covering the hydraulic tank.
2. Clean the area around the cover of the hydraulic oil reservoir.
3. Remove the cover from the hydraulic tank and remove the WU filters one by one.
4. Screw in the new corresponding filters.
5. Reapply the filter cover.

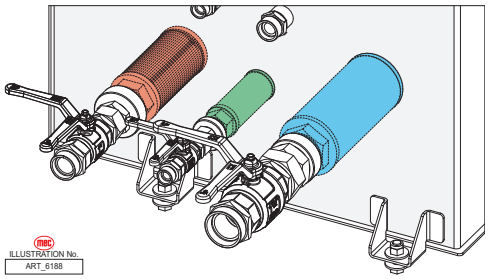

6. Check for a drop in the oil level by looking at the indicator gauge present on the tank. If required, add additional hydraulic oil of the necessary type to reach the correct level. See page 22 for more details about checking the hydraulic oil level.

PLFA Filter (Outlet of Function Pump)

1. Clean the area around the oil filter.
2. Remove the filter housing.
3. Pull out the filter element from the filter assembly chamber.
4. Install a new filter element to the filter assembly chamber.
5. Refit the filter housing and tighten it. Clean up any oil that may have spilled during the replacement procedure.

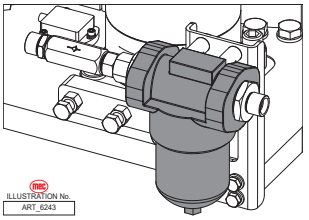

Return Oil Filter

1. Clean the area around the oil filter, and then remove the cap component.
2. Pull out the filter element from the filter assembly chamber.
3. Install the new filter element to the filter assembly chamber.
4. Reapply the cap components and tighten it. Clean up any oil that may have spilled during the replacement procedure.

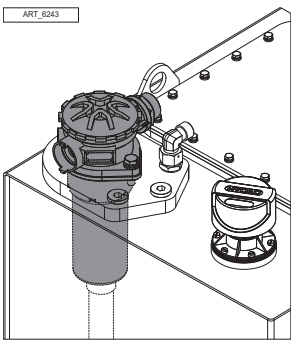

2) Replace the Engine Oil and Engine Oil filter

WARNING

Do not operate with the engine running!
Do not smoke or have open flames nearby!
Danger of burns!

When working on the oil system, make sure to keep the oil system and nearby areas clean and to keep them thoroughly clean from time to time. Dry any damp areas with air jets. When handling engine oil, make sure to follow all rules and regulations.

Make sure to properly dispose of any used engine oil and filter elements. Do not let the used engine oil spread on the ground. Run a test cycle after replacing. Also make sure that the sealing and pressure of the engine oil is correct and at the correct level.

An insufficient or excessive amount of engine oil level can damage the engine. Make sure that the machine is parked on a flat, level surface and is turned off before checking the engine oil level. Check the engine oil level only while it is warm, 5 minutes after the engine is turned off.

Do not remove the engine oil level rod with the engine running! Danger of burns!

Changing the engine oil

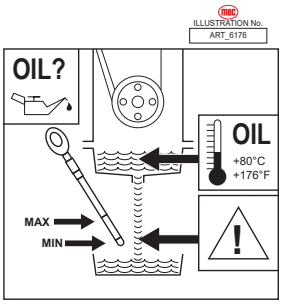

1. Run the engine until the oil temperature reaches more than 176°F (80°C).
2. Make sure that the machine is parked on a flat, level surface and turn the machine off. Keep the work area clear of any debris and unauthorized personnel.
3. Place a suitable container under the drain screw, unscrew the latter and drain out the lubricant oil.
4. After draining, reposition the screw with a new sealing ring and tighten by applying a torque of 40.5ft-lbs (55Nm).
5. Fill with engine oil then operate the engine until the oil temperature reaches more than 176°F (80°C) and check the engine oil level.
6. If necessary, add additional engine oil of the correct type.

Replacing the engine oil cartridge

The location of the engine oil filter will vary slightly depending on the engine.

PERKINS ENGINE

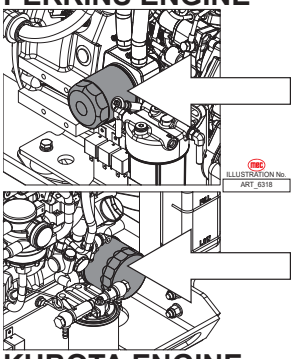

KUBOTA ENGINE

1. Make sure that the machine is parked on a flat, level surface and turn the machine off. Keep the work area clear of any debris and unauthorized personnel.
2. Place a suitable container underneath to catch any liquid that flows out.
3. Loosen the filter by hand, or if necessary then use a tool, and unscrew it.
4. Wipe the surface of the filter-holder with a clean cloth that does not leave any lint or fibers.
5. Oil the original filter cartridge seal slightly.
6. Screw the engine oil filter by hand until it is tight.

3) Replace Water-Fuel Separator Filter Element

WARNING

Fuel is flammable and can cause severe burns and/or death.
Do not smoke or have open flames while working on the fuel line.
Clean the engine parts and engine compartment to remove all traces of fuel to prevent risk of fire.

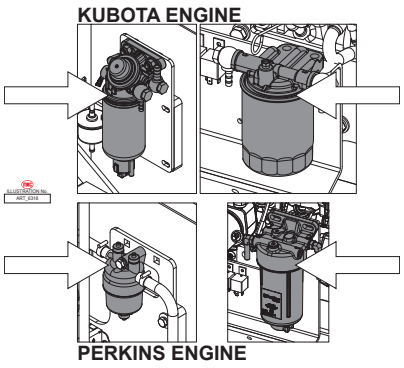

1. Make sure that the machine is parked on a flat, level surface and turn the machine off. Keep the work area clear of any debris and unauthorized personnel.
2. Block the fuel intake to the engine (if the tank is positioned at the top).
3. Place a suitable container underneath the cartridge to catch any liquid that flows out.
4. Disconnect the cables connected to the Water-Fuel Separator.
5. Loosen the drainage screw and drain out the liquid.
6. Remove the filter element inside.
7. Wipe the surface of the new filter element and the opposite side of the filter head to remove dirt.
8. Slightly dampen the surfaces of the filter cartridge with fuel and screw back on the filter head clockwise with a torque of 12.5-13.2ft-lbs (17-18Nm).
9. Screw the drainage cap back on by applying torque of 1.18±0.2ft-lbs (1.6±0.3Nm).
10. Reconnect the cables.
11. Open the fuel line and bleed the system.

4) Clean the Engine Radiator

To remove dust and debris from the engine radiator, use either compressed air, pressurized water or steam. However, it is recommended to use compressed air.

When using pressurized water, keep the high pressure jet cleaning nozzles at a distance of at least 19.6 inches (50 centimeters) from the engine radiator. Bringing the nozzle too close to the radiator can lead to risk of damaging the radiator.

5) Check the Turret Rotation Slewing Ring Gear Oil bolt torque

Check the bolts on the turret holding the slewing ring gear to see if any are damaged, missing, loose or rusty.

Before checking the torque of the bolts, lift up the main boom. To check the torque for the bolts, use a wrench and apply a torque of 442.5ft-lbs (600Nm).

6) Check the Counterweight bolts

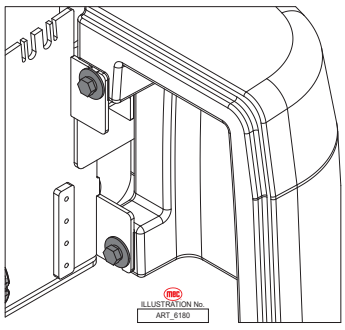

The counterweight bolts holding the counterweight to the boom turret are vital to balancing the machine. It is vital to check the torque of the bolts holding the counterweight.

Tighten one by one of the bolts fixing the balance weight with the torsion wrench, set point of 442.5ft-lbs (600Nm).

Yearly Maintenance

The following maintenance should be done every year or every 1,000 hours of operation, whichever comes first.

1) Replace the Fuel Filter

1. Make sure that the machine is parked on a flat, level surface and turn the machine off. Keep the work area clear of any debris and unauthorized personnel.
2. Place a suitable container underneath the cartridge to catch any liquid that flows out.
3. Loosen the filter by hand, or if necessary then use a tool, and unscrew it.
4. Collect the fuel that flows out.
5. Wipe the surface of the filter-holder with a clean cloth that does not leave lint.
6. Oil the original fuel filter cartridge seal slightly.
7. Screw the filter by hand until it is tight.
8. Bleed the fuel supply system.

2) Replace the Air Filter element

The efficiency and life of the engine depend greatly on the quality of air taken in. A dirty or damaged air filter can seriously affect the correct working of the engine and increase the possibility of a fault.

Replace the air filter element strictly according to the stated schedule. Do not try to wash dirty filters!

If the machine is expected to be used in environments with a lot of dust or high concentrations of contaminating or polluting agents in the air, halve the time interval between one filter replacement and the next.

Replacing the Air Filter element

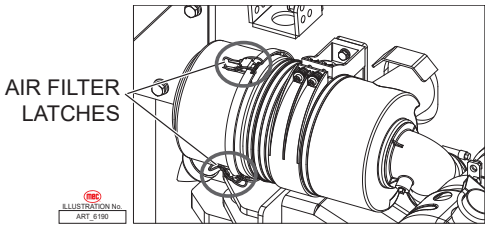

1. To access the Air Filter, open the engine hood.
2. Release the latches and remove the cover on the front of the filter.
3. Grip the air filter element and remove it from its housing.
4. Thoroughly wipe inside the filter housing with a damp cloth that doesn't leave any fibers. Avoid the use of aggressive solvents or products as these can damage the safety filter or the filter housing.
5. Install a new air filter element. Make sure the filter element is inserted properly in its seat. If installation is difficult, grease the rubber gasket slightly with silicone grease.

3) Change the Axle Differentials oil

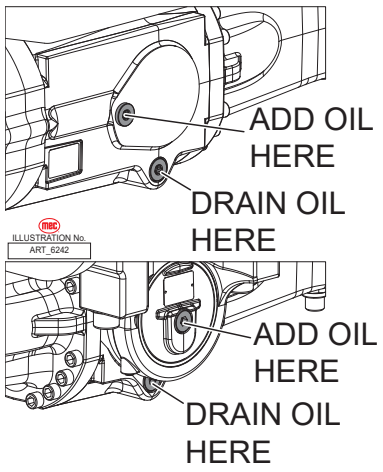

1. Make sure that the machine is parked on a flat, level surface. Keep the work area clear of any debris and unauthorized personnel.
2. Place suitable sized containers under the axle. Remove the drainage cap located near the bottom the axle and wait for the oil to drain out completely. If you want to speed up the operation, remove the cap used to add oil.
3. Plug back in the oil drainage cap and make sure they fit tightly. Remove the oil level cap.
4. If you haven't, remove the cap used to add oil and pour fresh oil of the correct type through the opening. Slowly pour in the oil while checking the flow of the oil through the oil level opening.
5. When the correct level has been reached, plug the oil level cap back in place tightly as well as the port used to add oil.

Note: Change the axle differential oil every 100-250 hours.

4) Change the Wheel Reduction Gears oil

1. Make sure that the machine is parked on a flat, level surface. Keep the work area clear of any debris and unauthorized personnel.
2. Place a suitable sized container under the reduction gear. Rotate the reduction gear cap so that the oil level cap is at the very bottom.
3. Remove the cap and wait for the oil to drain out completely.
4. Make sure that the gear hub is turned horizontally as the illustration to the right shows. Pour oil through the opening to the correct level.
5. Plug the cap back in place tightly. Repeat this operation for each wheel.

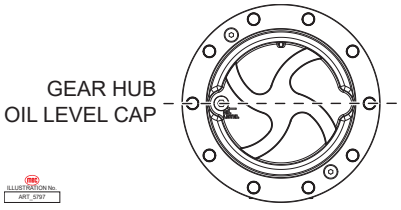

Note: Change the wheel reduction gears oil every 100-250 hours.

5) Adjust the Telescopic Boom sliding blocks

Make sure that the machine is parked on a flat, level surface with an area with sufficient clearance around it for boom functions. Keep the work area clear of any debris and unauthorized personnel.

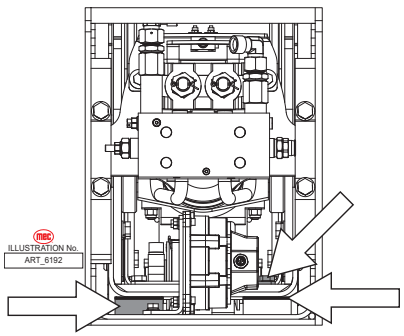

1. Remove the accessory from the quick-fit coupling. Center the turret and have the boom fully stowed and lowered.
2. Remove the cover on the rear part of the boom.
3. Loosen all the bolts on the upper and lower sliding blocks of the first extension stage. If the space between the sliding surface of the block and the sliding surface of the first boom exceeds 0.5mm, some pads will need to be added. Tightens the bolts about with a torque of 73.7ft-lbs (100Nm).
4. Repeat the adjustment operations for the lateral sliding blocks.
5. Move to the front of the boom, and identify the sliding blocks of the first extension stage.
6. Loosen all the bolt of the upper and lower sliding blocks of the first extension stage. If the

space between the sliding surface of the block and the sliding surface of the first boom exceeds 0.5mm, some pads will be need to be added. Tightens the bolts about with a torque of 73.7ft-lbs (100Nm).

7. Repeat the adjustment operations for the lateral sliding blocks.
8. After completing the operations try to extend and retract the boom to check the boom movement is smooth. If the movement of the boom is not smooth, repeat the adjustments.

6) Change the Turret Rotation Slewing Ring Gear Oil level

Changing the rotation reduction gear oil

1. Open the control hood and if needed, rotate the turret for better access to the reduction gear.
2. Place a suitable sized container under the drain cap. Remove the cap and wait for the oil to drain.
3. Plug the drainage opening and make sure the cap fits tightly. Add oil through the opening for adding oil until it reaches the level through the indicator.
4. Lubricate the reduction gear shaft bushes.

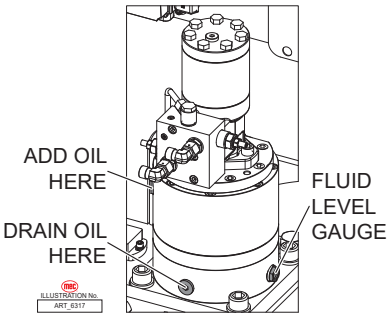

Check the slewing ring gear bearings for wear

The factory setting of the play of the bearings is between 0.05 and 0.25 millimeters.

The slewing ring gear must be replaced if the wear limit value exceeds 2.2 millimeters; to check the bearings for wear, proceed as described below.

1. Make sure that the machine is parked on a flat, level surface. Keep the work area clear of any debris and unauthorized personnel. Make sure that the platform is empty of both personnel and equipment and align the turret to the chassis axis.
2. Lubricate both the turret axial bearing tracks by means of the two grease nipples provided inside, and apply grease manually to the outer teeth of the slewing ring gear using a brush. Refer to page 23 for the grease brands.
3. Check the tightening of the bolts holding the turret rotation slewing ring gear, referring to page 29.
4. Start the machine from the ground controls and fully elevate, but do not extend, the primary boom and jib. The riser should remain in its stowed position.
5. Place a dial indicator with accuracy of 0.01, between the drive chassis and the turntable at a point that is directly under, or in line with, the boom and no more than 1 inch (2.5 centimeters) from the bearing.

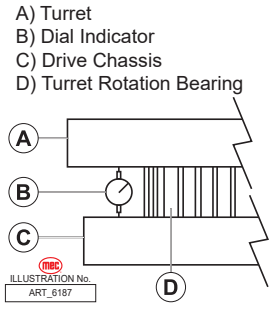

6. Adjust the dial indicator need to the “zero” position.
7. Elevate the riser, but do not extend it. Move the primary boom and jib to horizontal and fully extend.
8. Note the reading on the dial indicator. If the measurement is less than 2.2 millimeters, the bearing is good. Otherwise, the bearing is worn and needs to be replaced.
9. Remove the dial indicator and rotate the turntable 90°.
10. Repeat steps 5 through 9 until the rotation bearing has been checked in at least four equally spaced areas 90°apart.
11. Lower the boom to the stowed position and turn the machine off.

12. Remove the dial indicator from the machine.

7) Calibrate the Overload sensor

The overload sensor in the platform will show how much weight is in the platform on the diagnostic panel. If the weight in the platform does not exceed the rated load, the machine is safe to operate and will function properly.

If the weight exceeds the rated load, the machine will stop operating and the alarm will beep. The diagnostic panel will state that the weight in the platform is over the rated amount and to remove excess weight. Once the excess weight has been removed, the machine will operate normally.

The weighting system must be calibrated termly. The interval is 1,000 hours for running or every year. If the weight shown on the diagnostic panel is incorrect, then the sensor must be recalibrated.

1,500 Hour Maintenance

The following maintenance should be done every 1,500 hours of operation.

1) Clean the Fuel Filter mesh element

It is important for operating life of the machine to have a clean fuel suction mesh element. The pressure of fuel suction will be higher when the mesh element is dirty, which will damage the engine and shorten the operating life of the vehicle.

The procedures of cleaning the mesh element as follows:

1. Open the engine hood covering the fuel tank.
2. Slacken the bolts of fastening the fuel sucking pipe and pull out the fuel sucking pipe.
3. Remove the mesh element.
4. Clean the mesh slightly. Corrosive chemical solvent are forbidden to use!
5. Refit the mesh after completely cleaning and blowing the mesh with pressured air.

Replacing the mesh should be performed when the mesh is too dirty to clean or damaged.

Two Year Maintenance

The following maintenance should be done every 2 years or every 2,000 hours of operation, whichever comes first.

1) Change the Hydraulic fluid

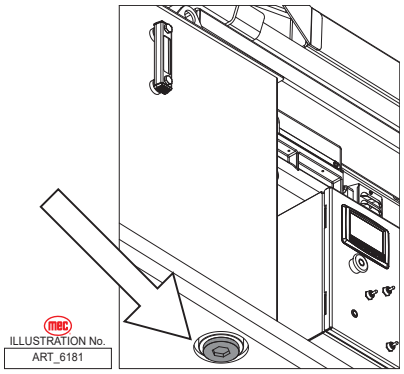

1. Go under the machine to access the hydraulic tank's drainage caps.
2. Place a suitable sized container under the drainage cap. Unscrew the cap and drain out the oil. To speed up the operation, also unscrew the filler cap.
3. Install the plug on the drain port. Fill the tank with hydraulic oil filtered with a 20-micron filter. Do not overfill.
4. Look around for enough space for extending and lifting completely.
5. Place a suitable sized container under the function manifold.
6. Disconnect the lifting down hose from B port of function manifold and block the B port with plug.
7. Start the engine, and lift up the main boom completely to move the oil from the cylinder rod chamber into the container.
8. Reconnect the hose.
9. Repeat the step 4-8 for moving the hydraulic oil out from the other cylinder rod chamber.

Park the machine and check the hydraulic oil level. If the oil level is low, add additional hydraulic fluid. Refer to page 22 for details on checking the hydraulic oil level.

Electrical Schematic, Lower Controls, Perkins Engine

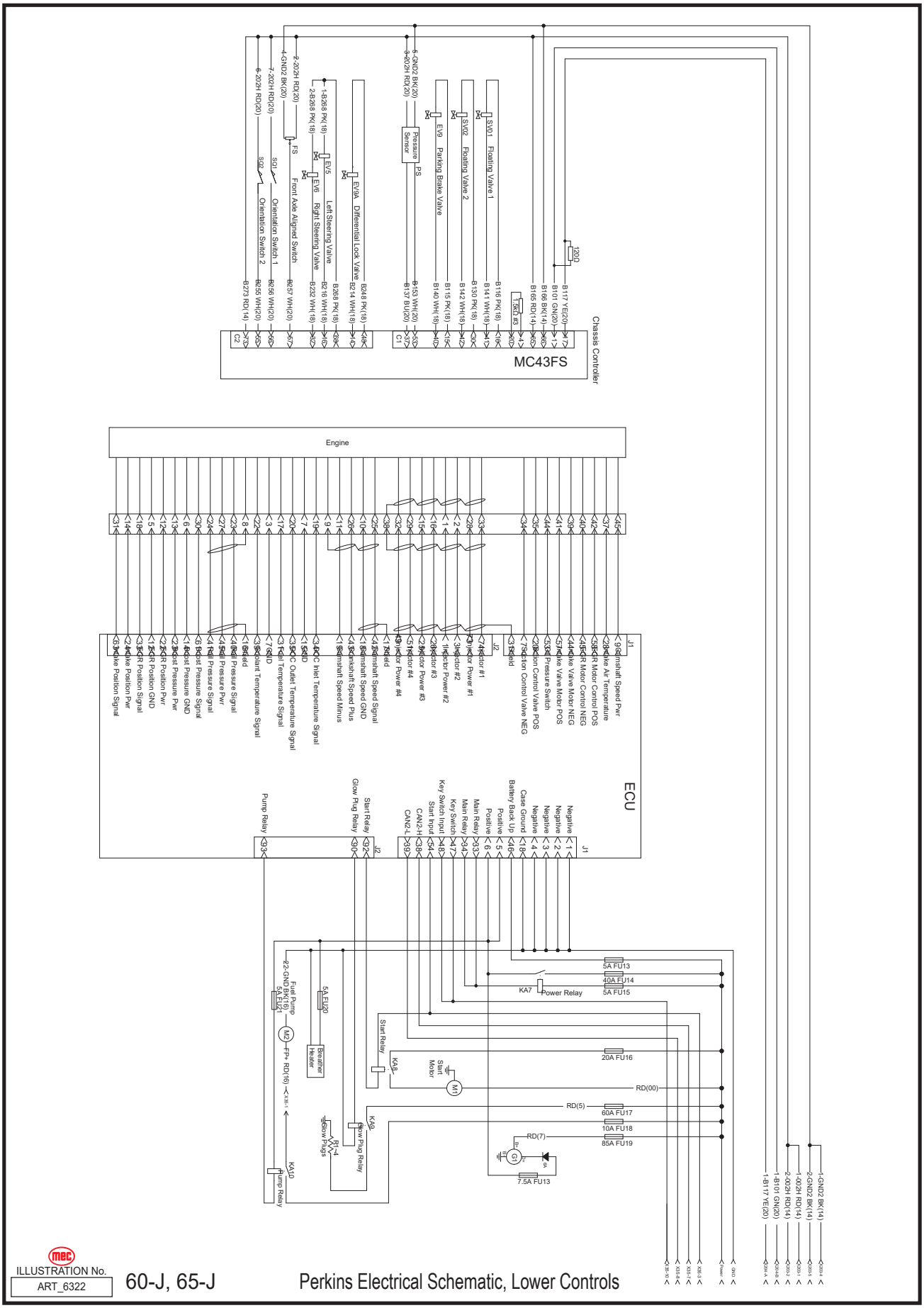

Electrical Schematic, Chassis, Perkins Engine

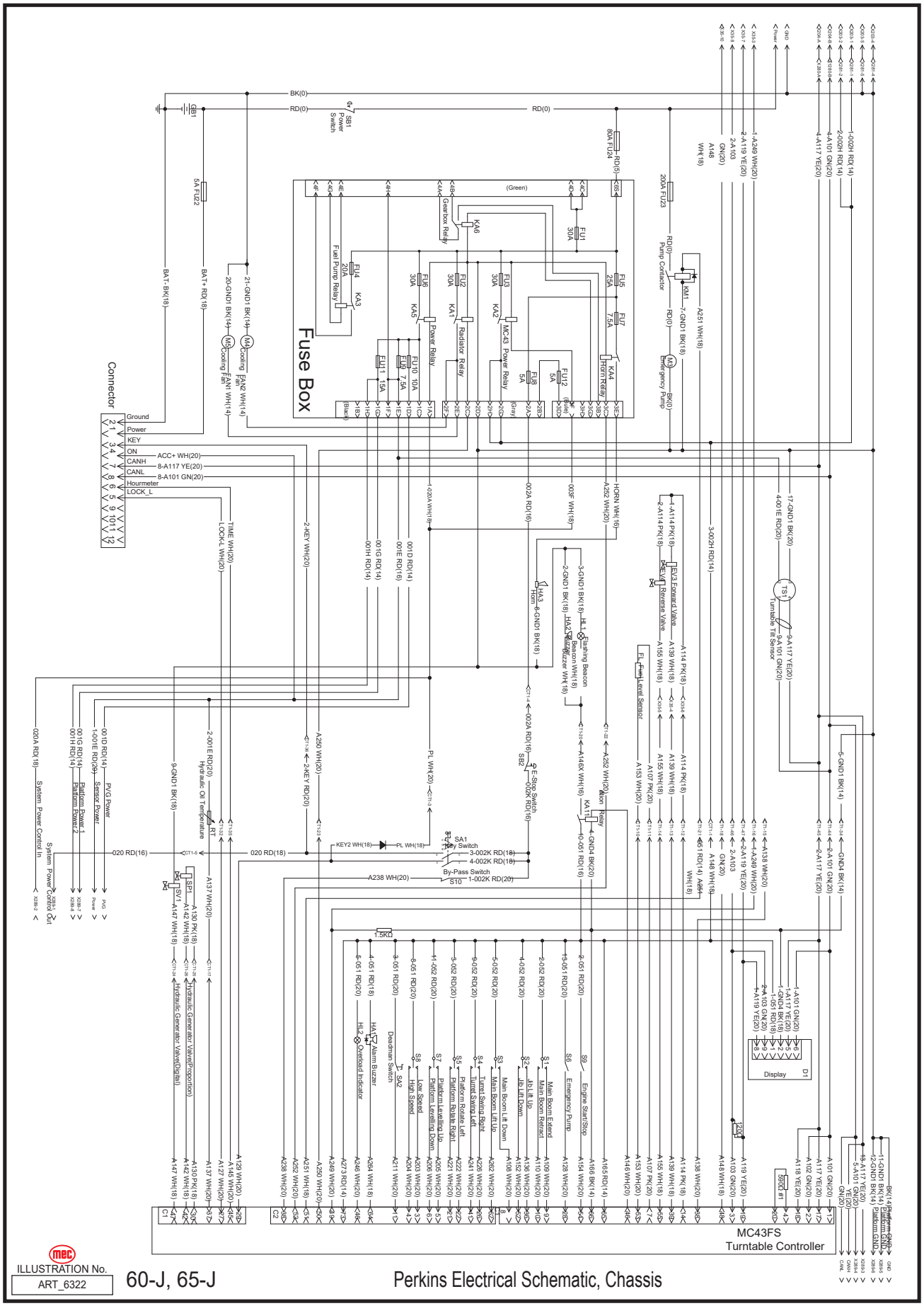

Electrical Schematic, Upper Controls, Perkins Engine

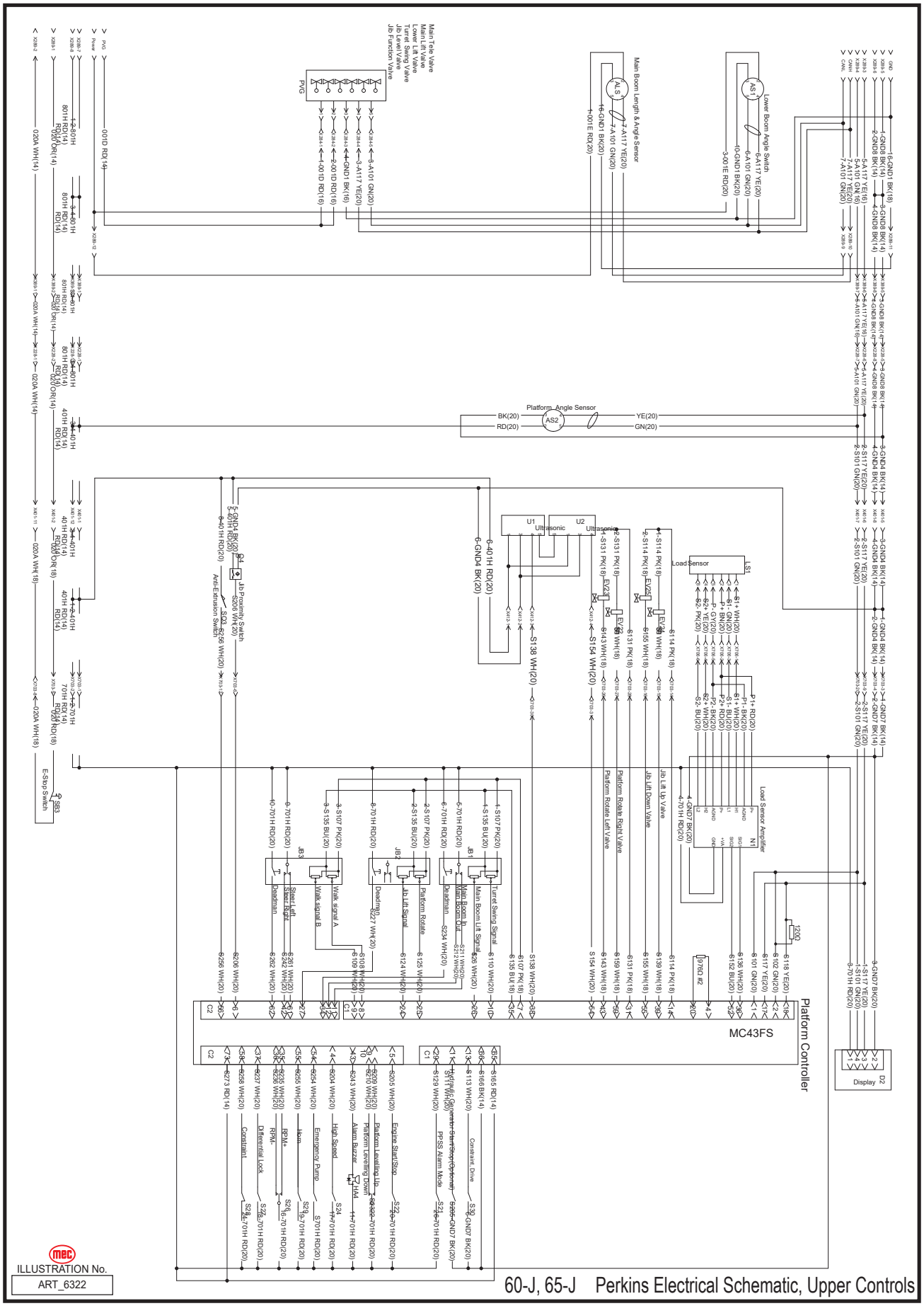

Electrical Schematic, Lower Controls, Kubota Engine

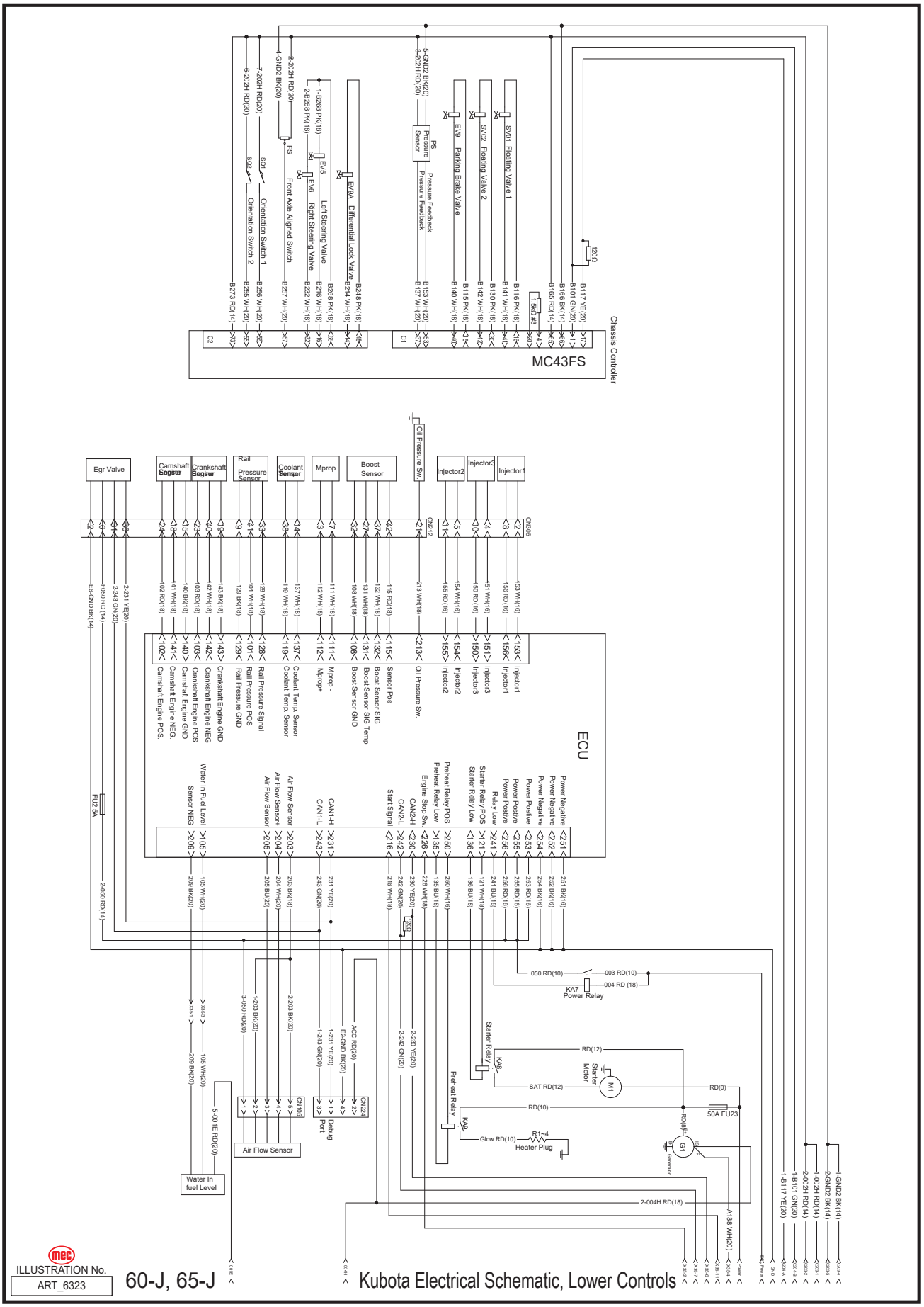

Electrical Schematic, Chassis, Kubota Engine

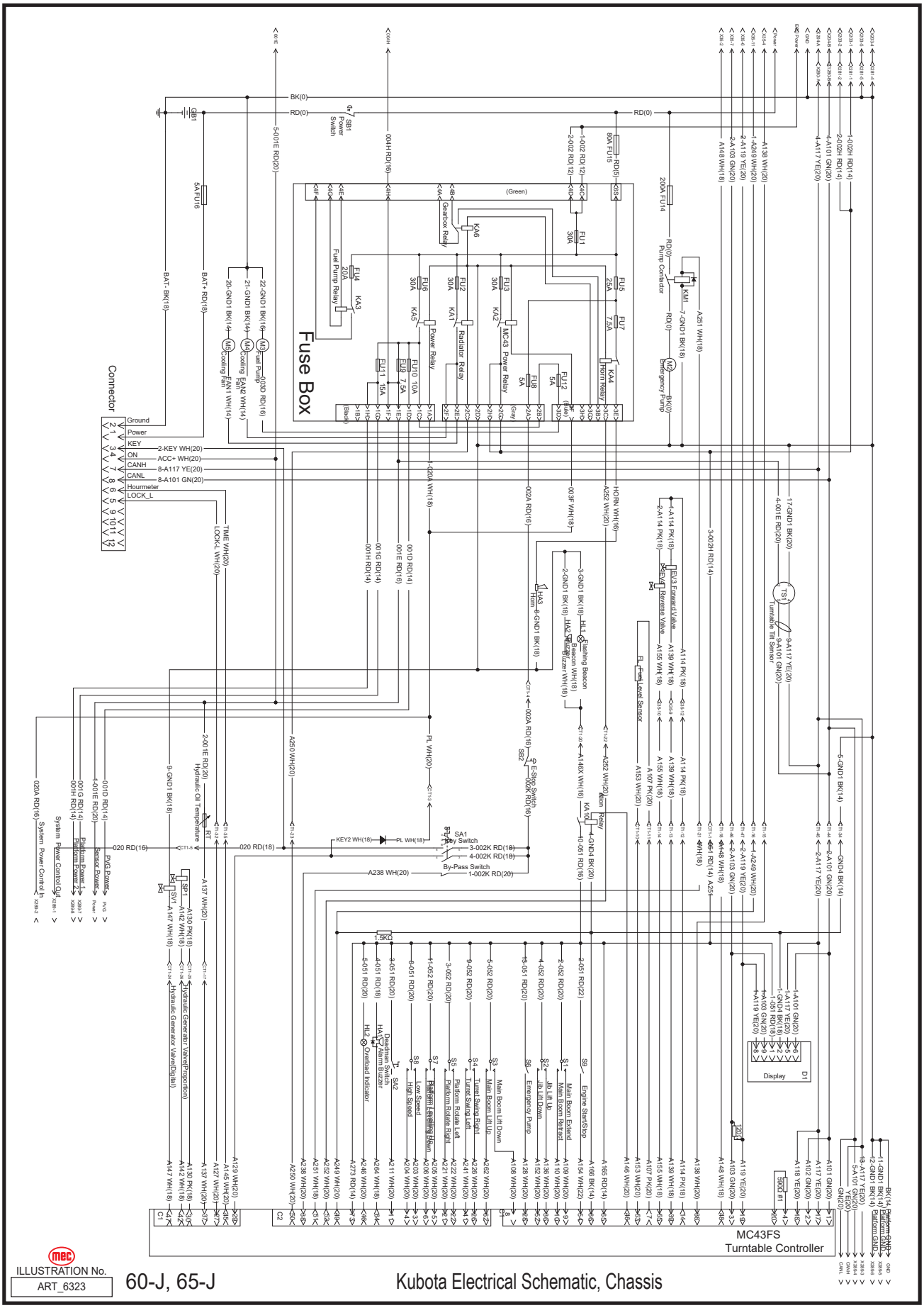

Electrical Schematic, Upper Controls, Kubota Engine

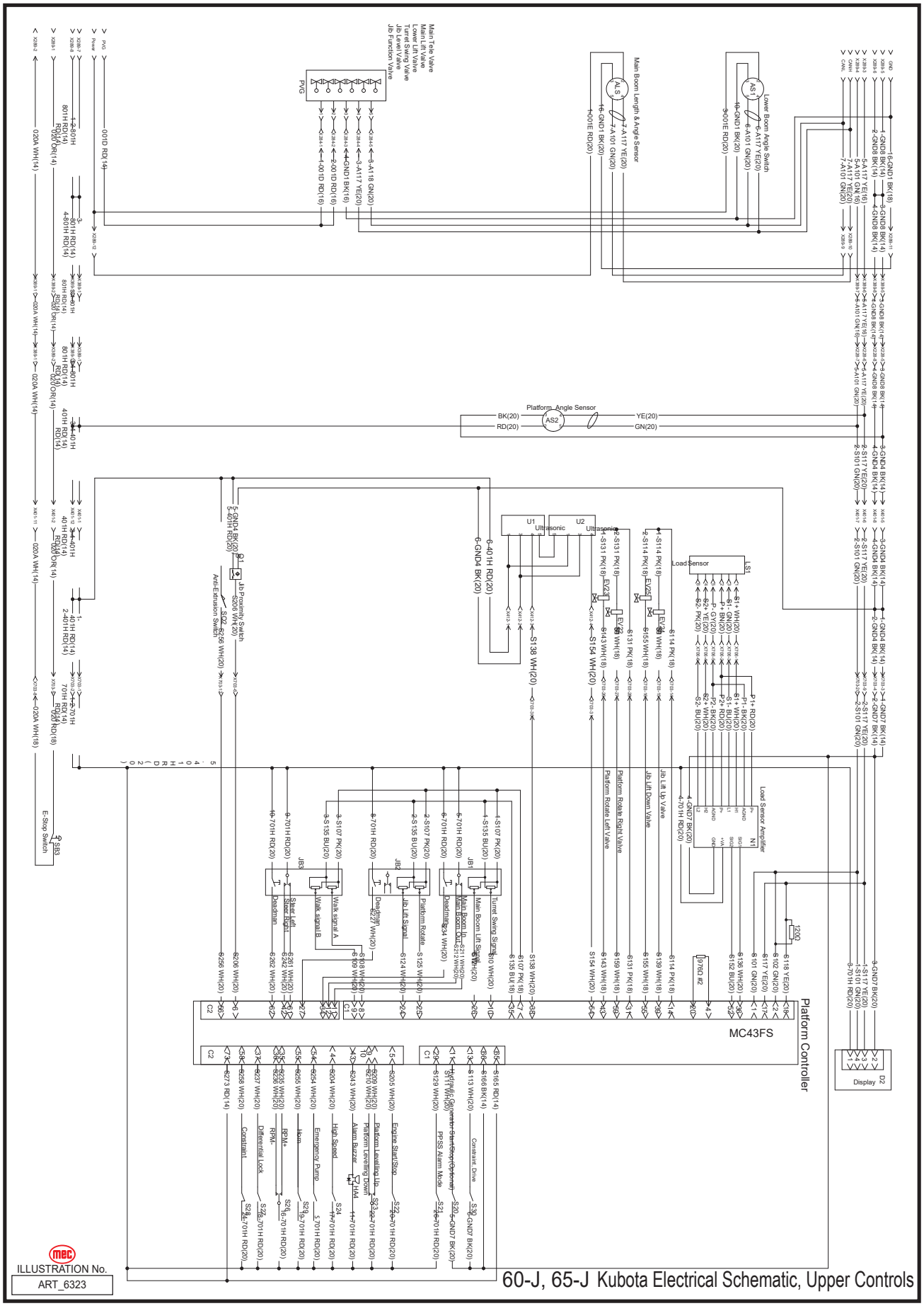

Hydraulic Schematic, Part 1

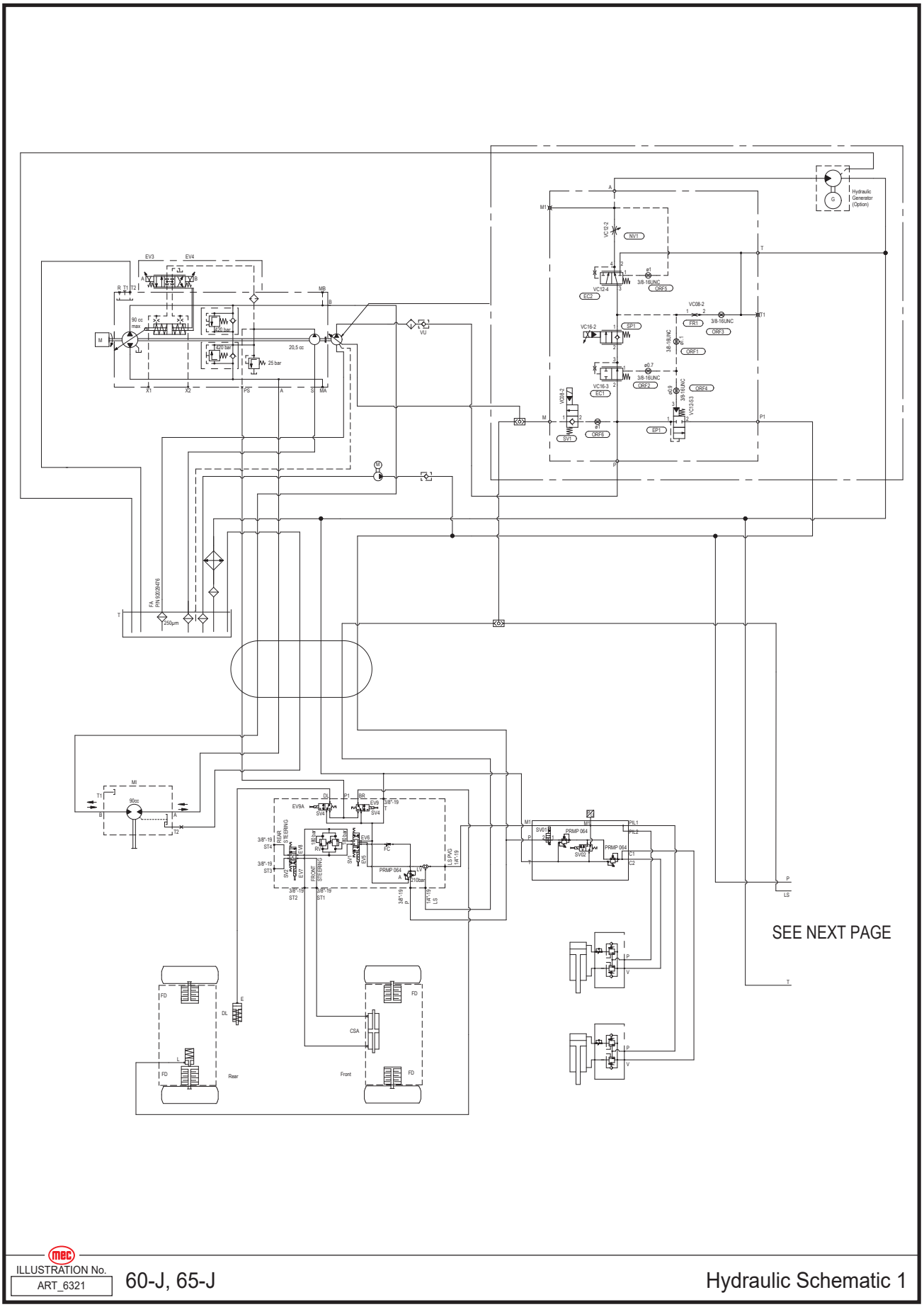

ILLUSTRATION No.
ART_6321

60-J, 65-J

Hydraulic Schematic 1

Hydraulic Schematic, Part 2

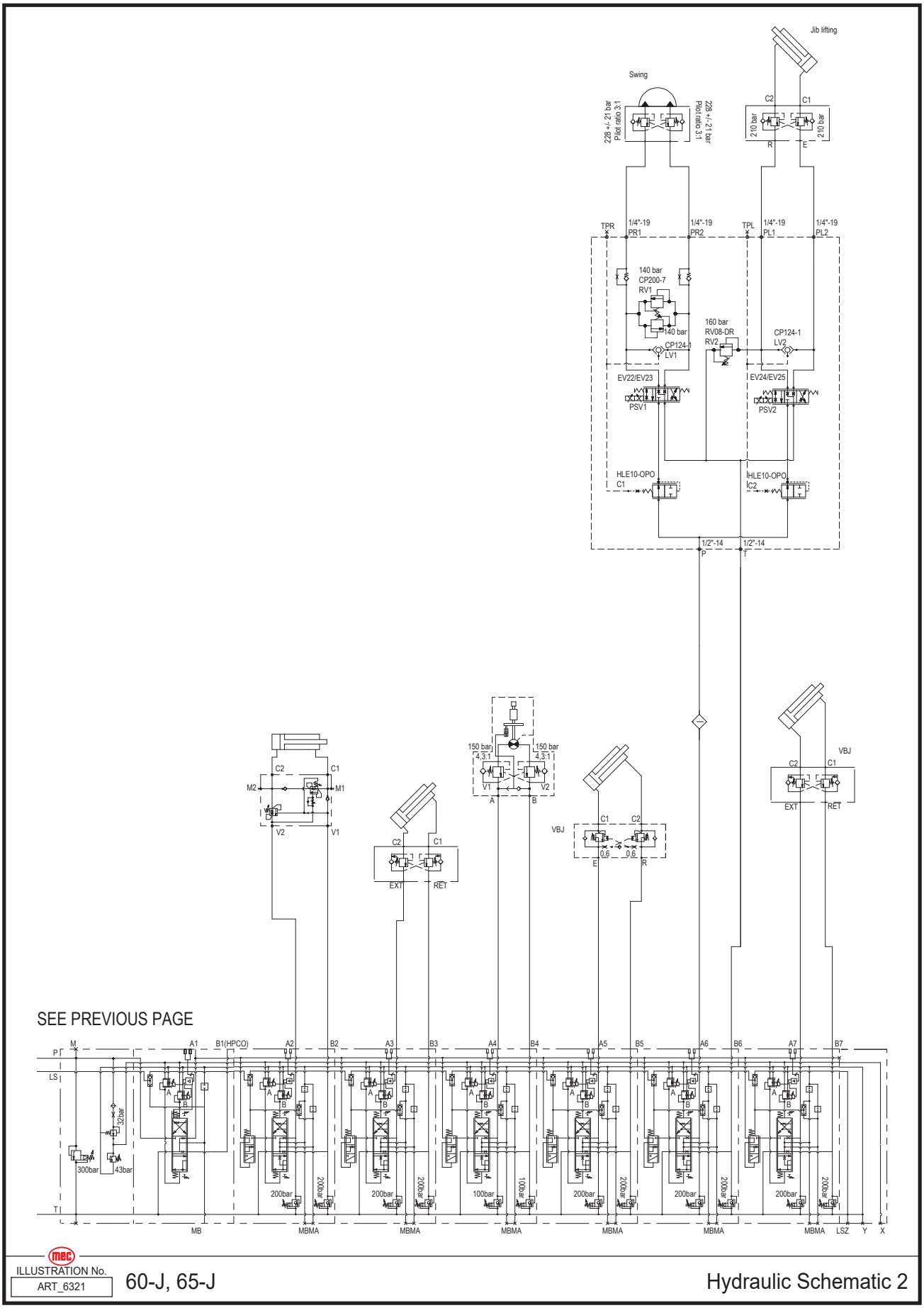

ILLUSTRATION No.
ART_6321

60-J, 65-J

Hydraulic Schematic 2

THIS PAGE HAS BEEN INTENTIONALLY LEFT BLANK.

Parts Introduction

This Parts sections consists of illustrated parts sections and is designed to provide you, the customer, with illustrations and the list of associated parts needed to properly maintain the MEC self-propelled aerial work platform. When used in conjunction with the Service section in this manual and the Operator's Manual (provided separately), this manual will assist you in making necessary adjustments and repairs, and identifying and ordering the correct replacement parts.

All parts represented here are manufactured and supplied in accordance with MEC quality standards.

We recommend that you use genuine MEC parts to ensure proper operation and reliable performance.

To obtain maximum benefits from your MEC Aerial Work Platforms, always follow the proper operating and maintenance procedures. Only trained authorized personnel should be allowed to operate or service this machine. Service personnel should read and study the Operator's, and the Service and Parts Manuals in order to gain a thorough understanding of the unit prior to making any repairs.

Axle Installations

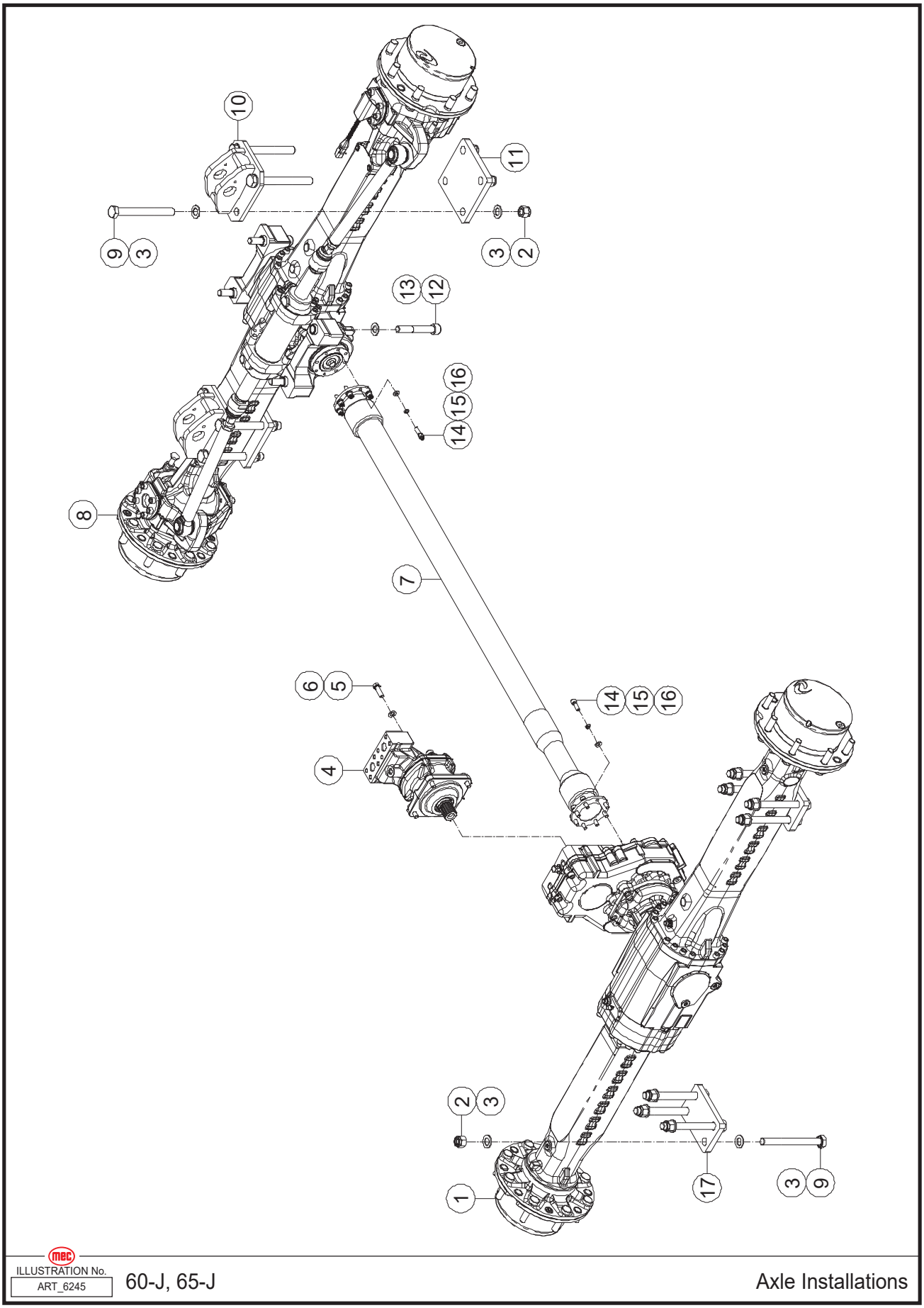

ILLUSTRATION No. ART_6245

60-J, 65-J

Axle Installations

Item	Part Number	Description	Qty.
1	48575	Rear Axle Assembly	1
2	53554	Nut NNYL M22-2.50 ZP	16
3	53258	WSHR M22 Standard Flat Washer ZP	32
4	48576	Drive Motor Assembly	1
5	53247	Screw HHCS M12-1.75 × 40 ZP	4
6	50003	WSHR M12 Standard Flat Washer ZP	4
7	48577	Propeller Shaft	1
8	48578	Front Axle Assembly	1
9	53593	Screw HHCS M22-2.50 × 210 ZP	16
10	48579	Seat, Axle Lockout Cylinder Assembly	2
11	48580	Bracket, Link	2
12	53075	Screw HHCS M20-2.50 × 130 ZP	4
13	50005	WSHR M20 Standard Flat Washer ZP	4
14	50127	Screw SHCS M10-1.50 × 30 ZP	16
15	53054	WSHR M10 Spring Washer ZP	16
16	50002	WSHR M10 Standard Flat Washer ZP	16
17	48581	Bracket, Link	2

Axle Lockout Cylinder Installations

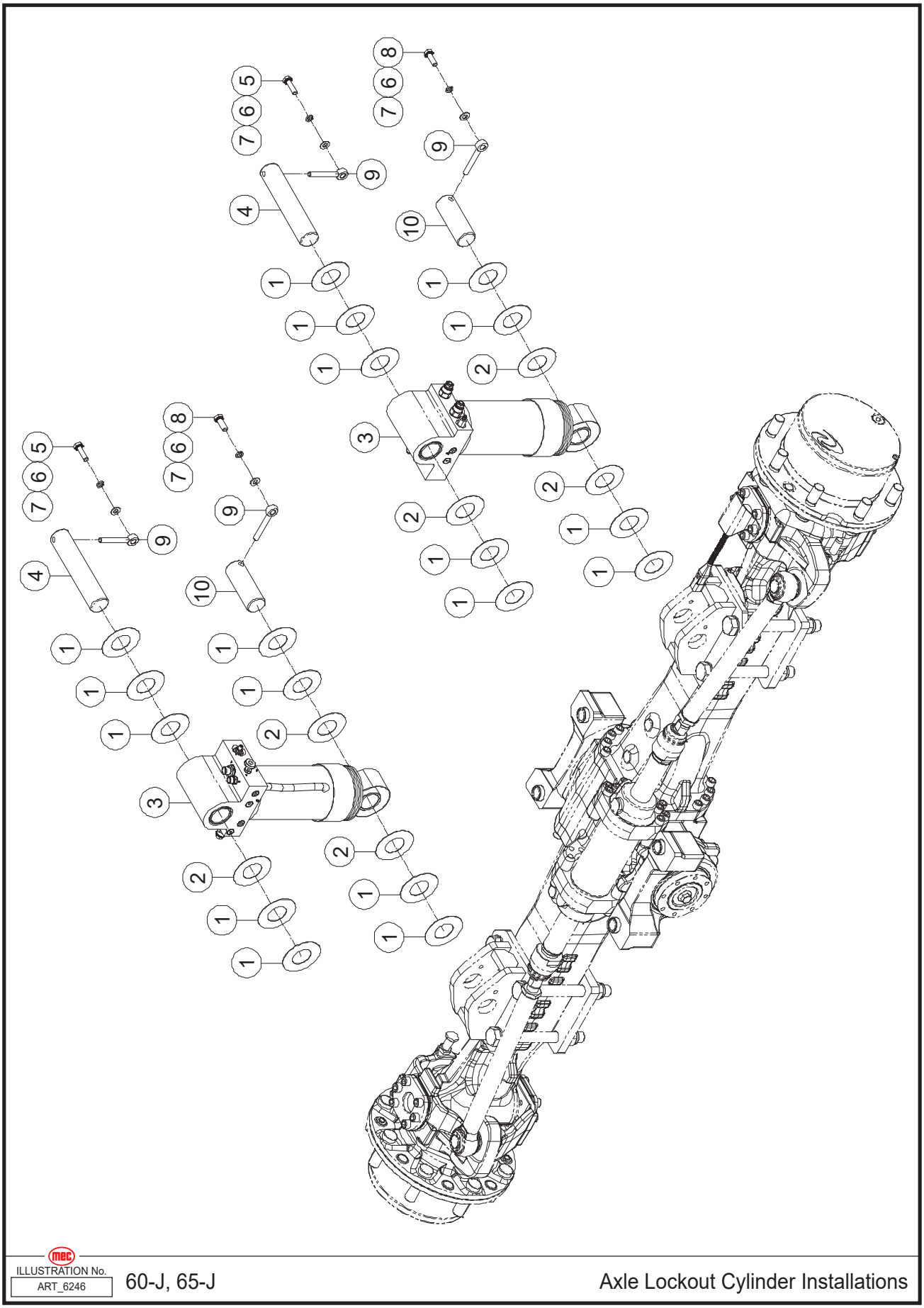

ILLUSTRATION No. ART_6246

60-J, 65-J

Axle Lockout Cylinder Installations

Item	Part Number	Description	Qty.
1	48582	Shim	18
2	48583	Shim	6
3	REF	Axle Lockout Cylinder Assembly (Refer to page 182)	2
4	48584	Pin, Pivot	2
5	50332	Screw HHCS M10-1.50 × 35 ZP	2
6	53054	WSHR M10 Spring Washer ZP	4
7	50002	WSHR M10 Standard Flat Washer ZP	4
8	50034	Screw HHCS M10-1.50 × 30 ZP	2
9	41431	Pin, Lock	4
10	48585	Pin, Pivot	2

REF - Reference

Tire and Wheel Installations

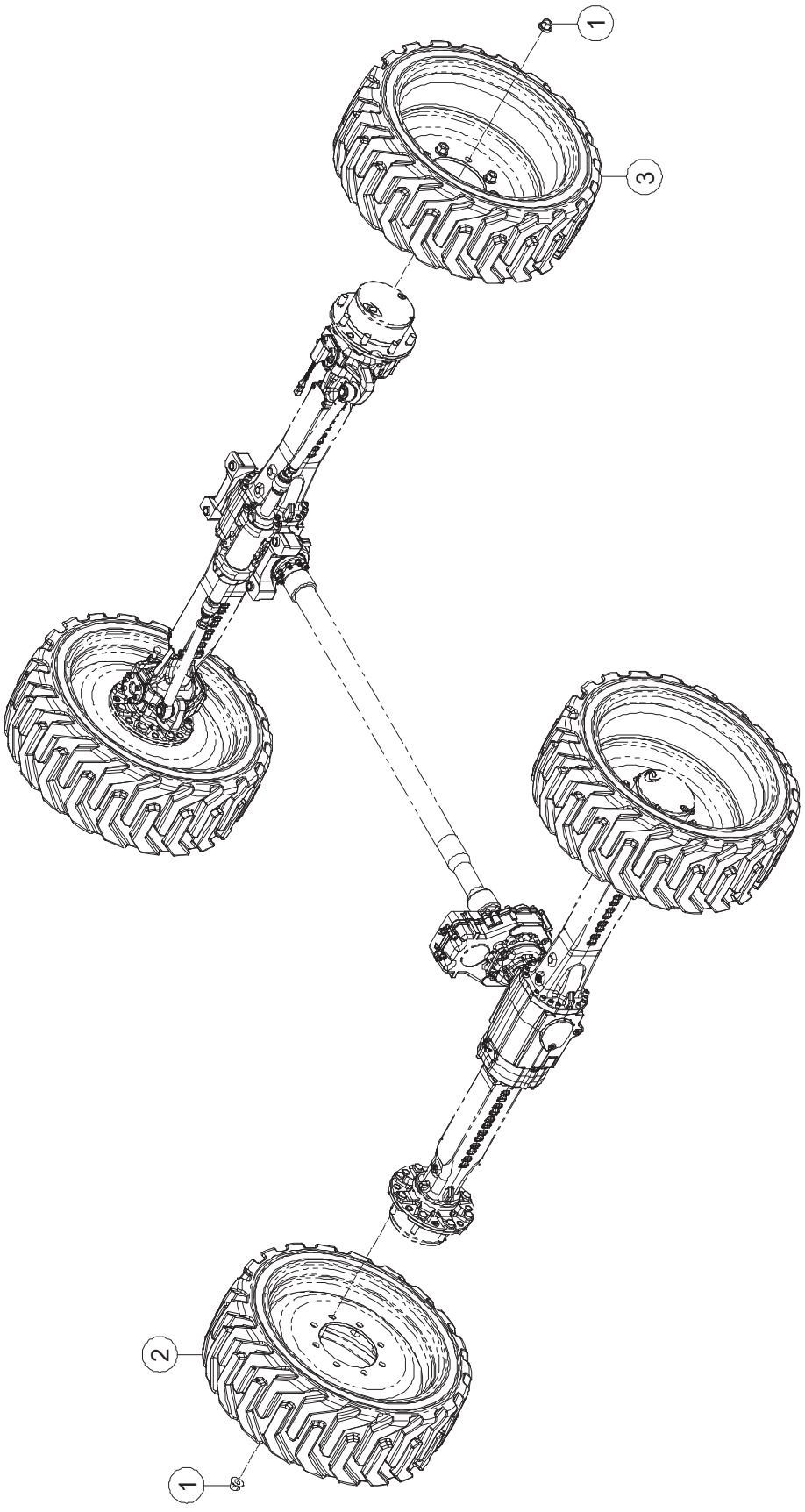

ILLUSTRATION No. ART_6247

60-J, 65-J

Tire and Wheel Installations

Item	Part Number	Description	Qty.
1	53556	Nut NNYL M22-1.50 Flange ZP	32
2	48587	Tire and Wheel Assembly (Left Side)	2
3	48589	Tire and Wheel Assembly (Right Side)	2

Slewing Ring Installations

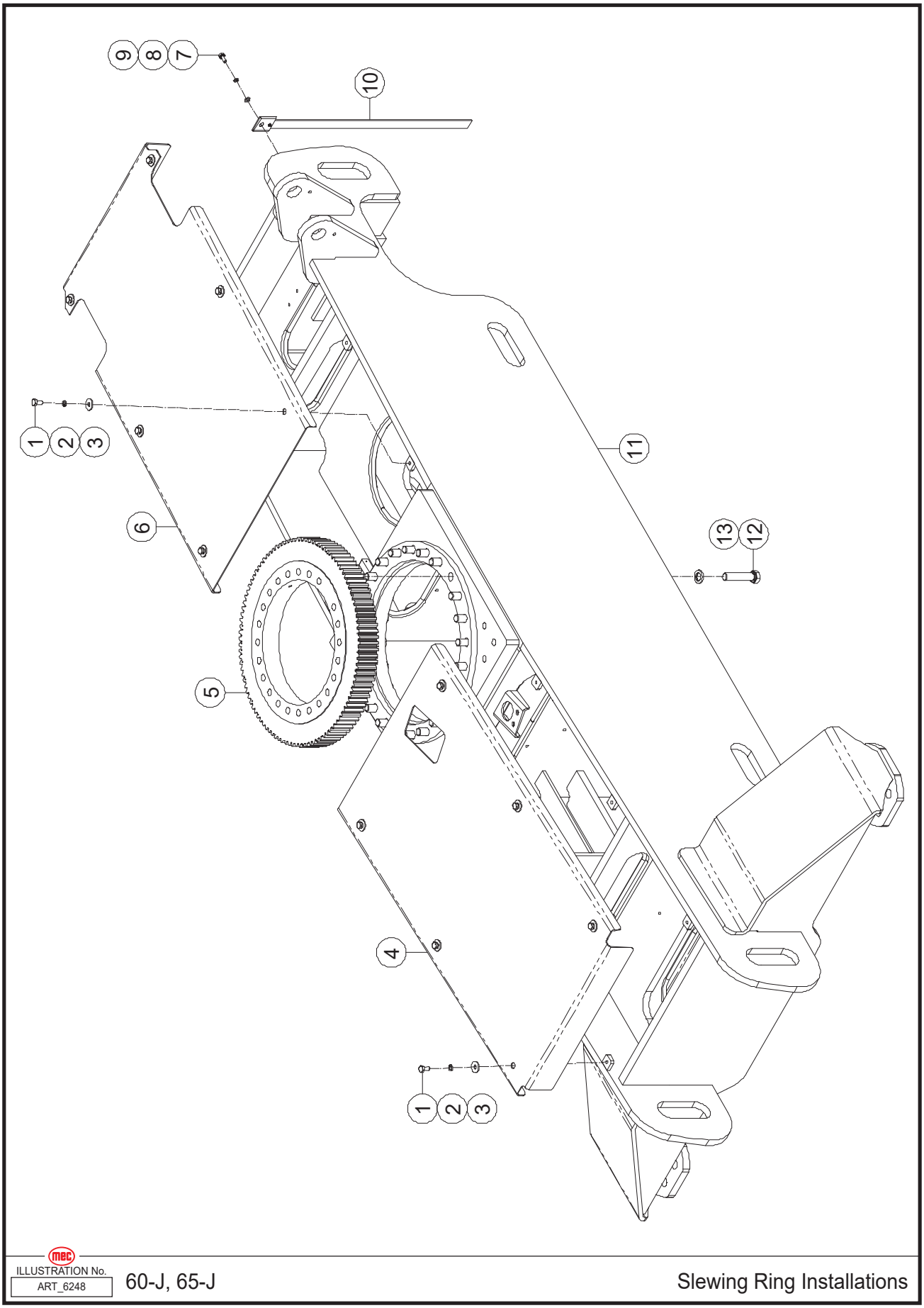

ILLUSTRATION No.
ART_6248

60-J, 65-J

Slewing Ring Installations

Item	Part Number	Description	Qty.
1	50215	Screw HHCS M10-1.50 × 20 ZP	12
2	53054	WSHR M10 Spring Washer ZP	12
3	53375	WSHR M10 Flat Fender Washer ZP	12
4	48590	Rear Cover	1
5	48591	Slewing Ring	1
6	48592	Front Cover	1
7	50030	Screw HHCS M08-1.25 × 20 ZP	1
8	53055	WSHR M08 Spring Washer ZP	1
9	50001	WSHR M08 Standard Flat Washer ZP	1
10	44561	Ground Strap	1
11	48593	Chassis	1
12	53594	Screw HHCS M20-2.50 × 90	24
13	47601	Flat Washer	24

Rotary Coupling Installations

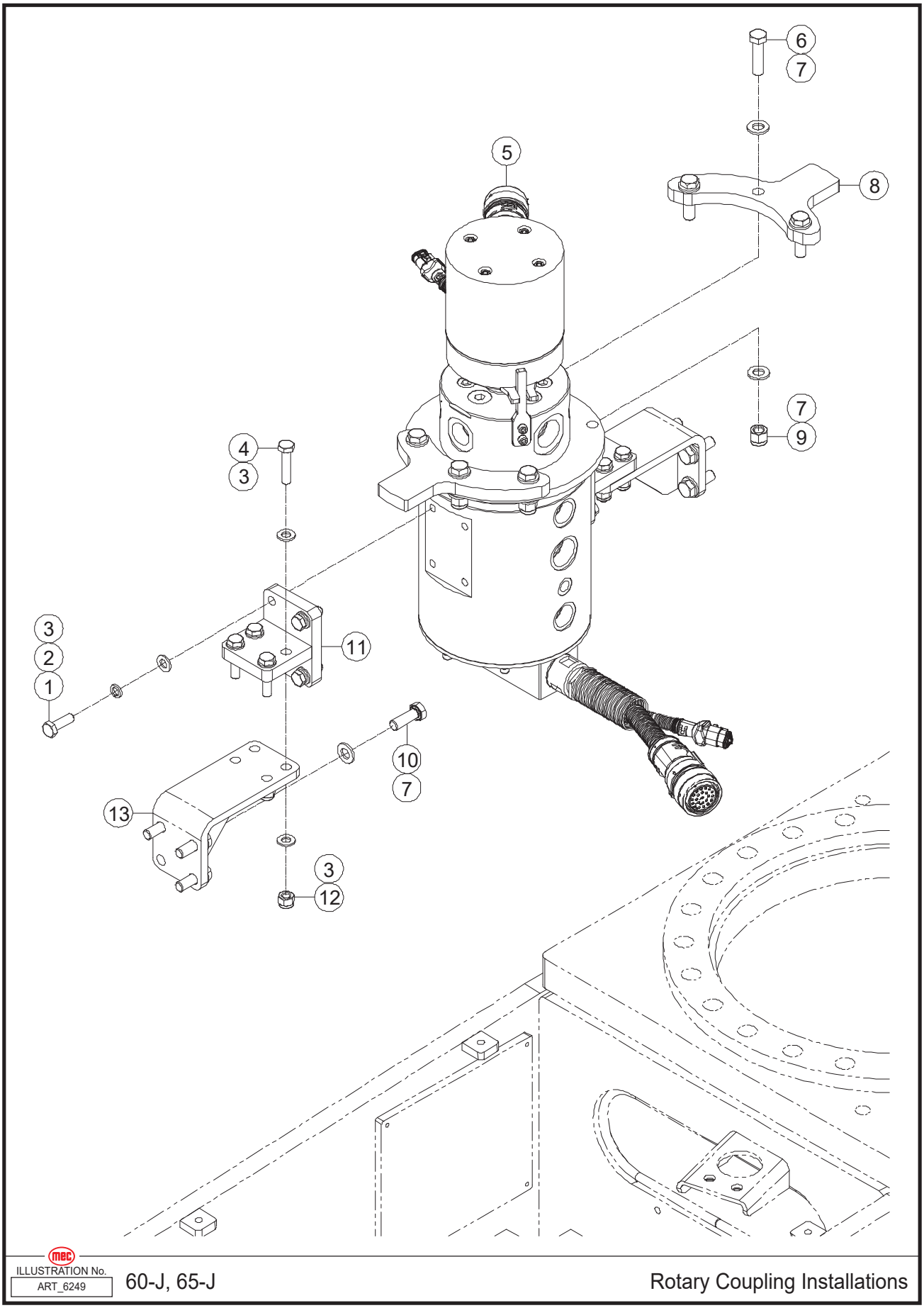

ILLUSTRATION No. ART_6249

60-J, 65-J

Rotary Coupling Installations

Item	Part Number	Description	Qty.
1	50034	Screw HHCS M10-1.50 × 30 ZP	8
2	53054	WSHR M10 Spring Washer ZP	8
3	50002	WSHR M10 Standard Flat Washer ZP	24
4	50430	Screw HHCS M10-1.50 × 45 ZP	8
5	47580	Rotary Coupling Assembly	1
6	53103	Screw HHCS M12-1.75 × 45 ZP	6
7	50003	WSHR M12 Standard Flat Washer ZP	20
8	47581	Plate	2
9	50050	Nut NNYL M12-1.75 ZP	6
10	50040	Screw HHCS M12-1.75 × 35 ZP	8
11	47586	Support	2
12	50049	Nut NNYL M10-1.50 ZP	8
13	48594	Support	2

Front Axle Accessory

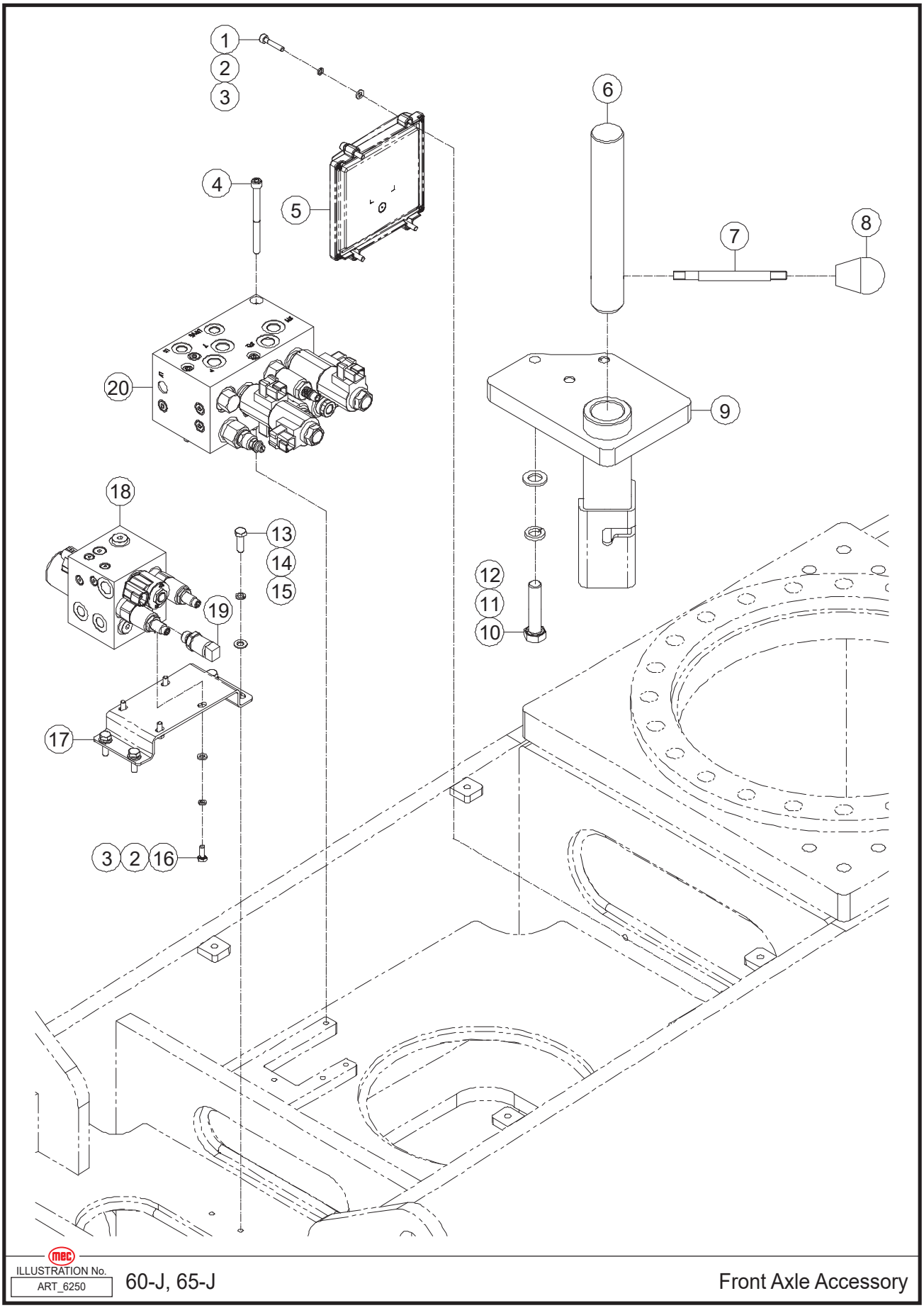

ILLUSTRATION No. ART_6250 60-J, 65-J Front Axle Accessory

Item	Part Number	Description	Qty.
1	53207	Screw SHCS M06-1.00 × 30 ZP	4
2	53046	WSHR M06 Spring Washer ZP	8
3	50000	WSHR M06 Standard Flat Washer ZP	8
4	50270	Screw SHCS M08-1.25 × 100 ZP	3
5	46913	Controller	1
6	47587	Pin, Pivot	1
7	47589	Rod	1
8	47590	Handle	1
9	48595	Bracket	1
10	50493	Screw HHCS M16-2.00 × 70 ZP	3
11	53149	WSHR M16 Spring Washer ZP	3
12	50004	WSHR M16 Standard Flat Washer ZP	3
13	50031	Screw HHCS M08-1.25 × 25 ZP	4
14	53055	WSHR M08 Spring Washer ZP	4
15	50001	WSHR M08 Standard Flat Washer ZP	4
16	50445	Screw HHCS M06-1.00 × 16 ZP	4
17	48596	Bracket	1
18	48597	Oscillate Manifold Assembly (Refer to page 62)	1
19	44448	Pressure Sensor	1
20	48598	Chassis Manifold Assembly (Refer to page 60)	1

Rear Axle Accessory

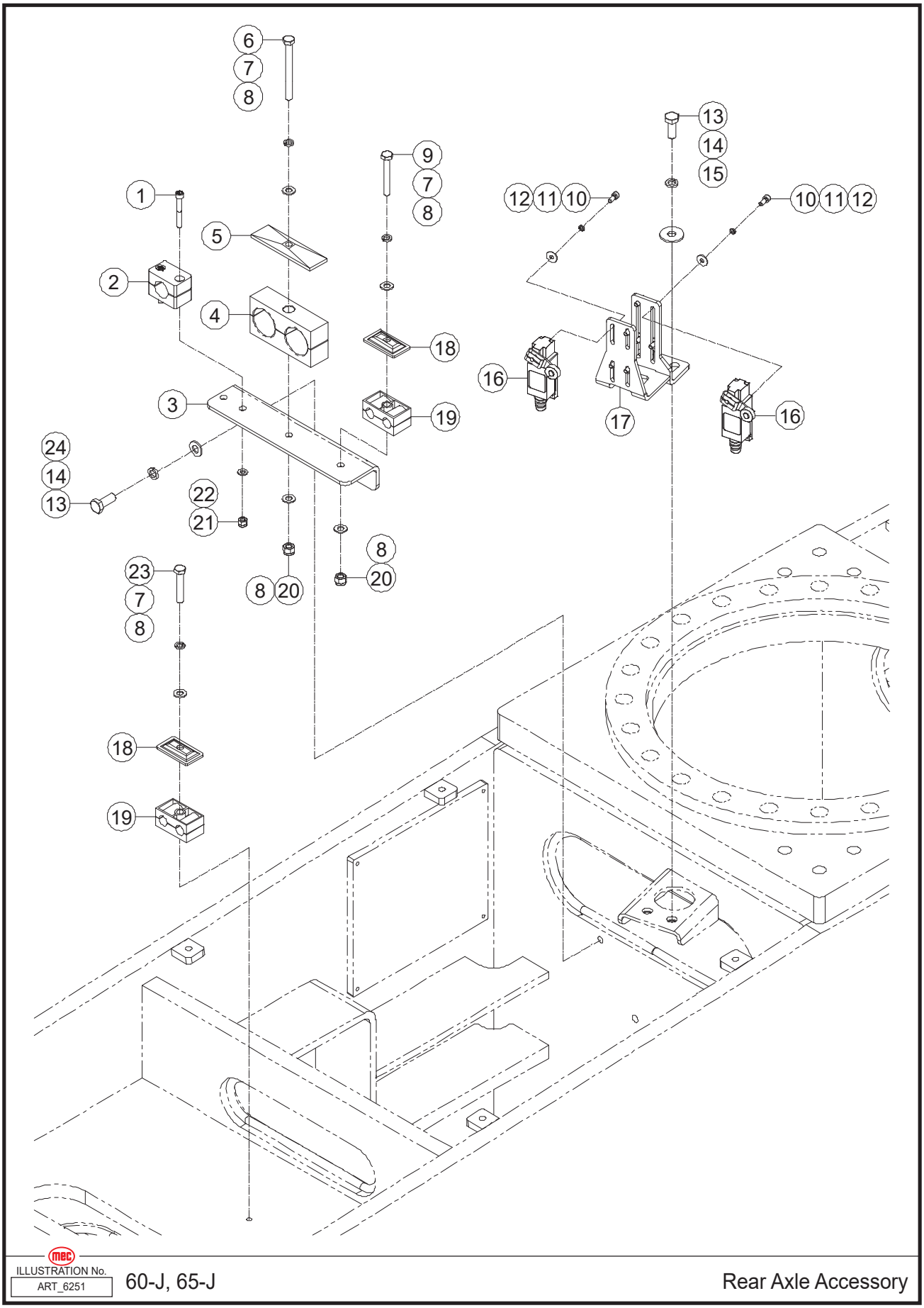

ILLUSTRATION No. ART_6251

60-J, 65-J

Rear Axle Accessory

Item	Part Number	Description	Qty.
1	53595	Screw SHCS M06-1.00 × 45 ZP	2
2	48599	Clamp	1
3	48650	Support	1
4	48651	Clamp	1
5	48652	Plate	1
6	50019	Screw HHCS M08-1.25 × 85 ZP	1
7	53055	WSHR M08 Spring Washer ZP	3
8	50001	WSHR M08 Standard Flat Washer ZP	5
9	50016	Screw HHCS M08-1.25 × 55 ZP	1
10	53116	Screw SHCS M05-0.80 × 12 ZP	8
11	53043	WSHR M05 Spring Washer ZP	8
12	50525	WSHR M05 Flat Fender Washer ZP	8
13	50033	Screw HHCS M10-1.50 × 25 ZP	4
14	53054	WSHR M10 Spring Washer ZP	4
15	53375	WSHR M10 Flat Fender Washer ZP	2
16	42074	Switch, Limit	2
17	48653	Support	1
18	47999	Plate	2
19	46277	Clamp	2
20	50048	Nut NNYL M08-1.25 ZP	2
21	50047	Nut NNYL M06-1.00 ZP	2
22	50000	WSHR M06 Standard Flat Washer ZP	2
23	50057	Screw HHCS M08-1.25 × 45 ZP	1
24	50002	WSHR M10 Standard Flat Washer ZP	2

Chassis Manifold Assembly

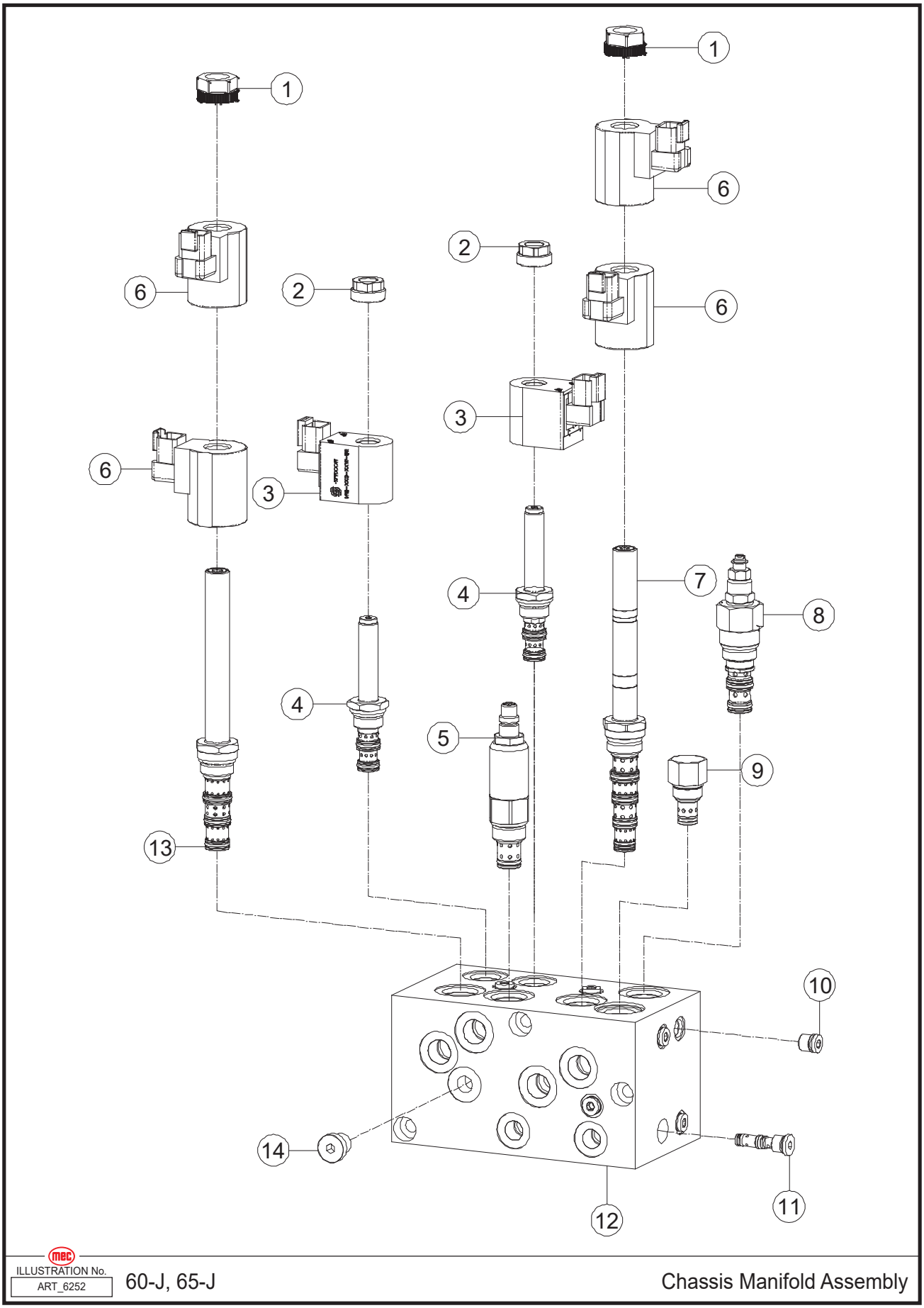

ILLUSTRATION No.
ART_6252

60-J, 65-J

Chassis Manifold Assembly

Item	Part Number	Description	Qty.
1	43414	Nut	2
2	43405	Nut	2
3	43406	Coil	2
4	43407	Cartridge, Solenoid Valve	2
5	47593	Cartridge, Relief Valve	1
6	43413	Coil	4
7	47594	Cartridge, Solenoid Valve	1
8	47595	Cartridge, Pressure Reducing Valve	1
9	48654	Cartridge, Flow Control Valve	1
10	47597	Plug	10
11	43419	Cartridge, Shuttle Valve	1
12	47598	Body	1
13	47599	Cartridge, Solenoid Valve	1
14	46869	Plug	1

Oscillate Manifold Assembly

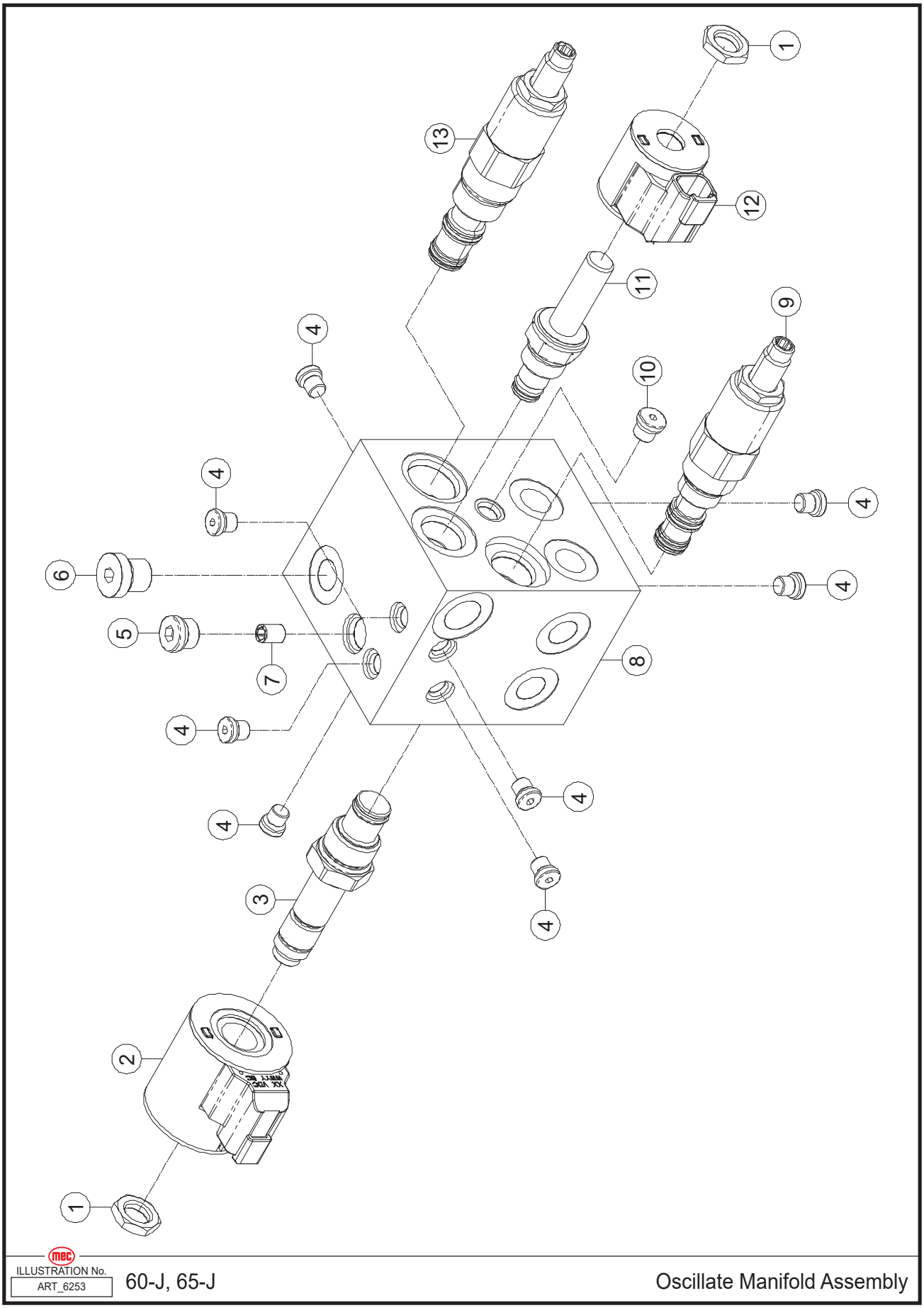

ILLUSTRATION No. ART_6253

60-J, 65-J

Oscillate Manifold Assembly

Item	Part Number	Description	Qty.
1	42795	Nut	2
2	48561	Coil	1
3	48655	Cartridge, Solenoid Valve	1
4	43465	Plug	8
5	42802	Plug	1
6	46869	Plug	1
7	43645	Orifice	1
8	48656	Body	1
9	48657	Cartridge, Pressure Reducing Valve	1
10	43643	Plug	1
11	43372	Cartridge, Solenoid Valve	1
12	48568	Coil	1
13	48658	Cartridge, Pressure Reducing Valve	1

Gearmotor Installation

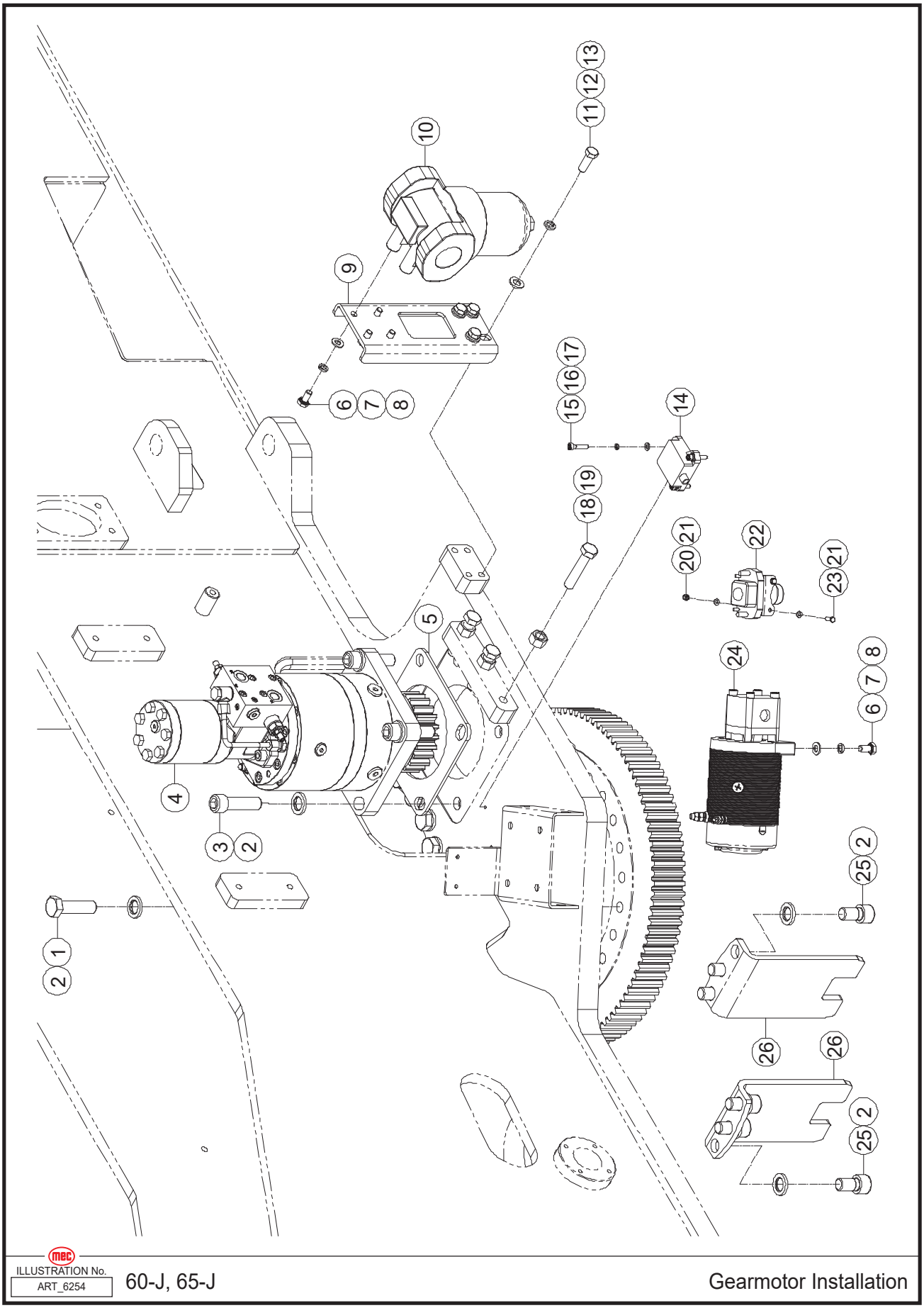

Item	Part Number	Description	Qty.
1	50488	Screw HHCS M20-2.50 × 70 ZP	23
2	47601	Flat Washer	33
3	53597	Screw SHCS 3/4-10 × 2 3/4 ZP	4
4	48659	Gearmotor	1
5	48660	Shim	1
6	50215	Screw HHCS M10-1.50 × 20 ZP	6
7	53054	WSHR M10 Spring Washer ZP	6
8	50002	WSHR M10 Standard Flat Washer ZP	6
9	48182	Bracket	1
10	47730	Pressure Filter	1
--	47731	Element, Filter	1
11	50040	Screw HHCS M12-1.75 × 35 ZP	4
12	53148	WSHR M12 Spring Washer ZP	4
13	50003	WSHR M12 Standard Flat Washer ZP	4
14	47591	Tilt Sensor	1
15	53207	Screw SHCS M06-1.00 × 30 ZP	3
16	53046	WSHR M06 Spring Washer ZP	3
17	50000	WSHR M06 Standard Flat Washer ZP	3
18	50480	Screw HHCS M16-2.00 × 75 ZP	3
19	53524	Nut NHEX M16-2.00 ZP	3
20	50524	Nut NNYL M05-0.80 ZP	2
21	53038	WSHR M05 Standard Flat Washer ZP	4
22	43800	DC Contactor	1
23	53418	Screw HHCS M05-0.80 × 16 ZP	2
24	47753	Emergency Pump Assembly	1
--	47754	Motor	1
--	47755	Pump	1
25	53596	Screw SHCS M20-2.50 × 16 ZP	6
26	48661	Stirrup	2

Kubota Engine Support Installation

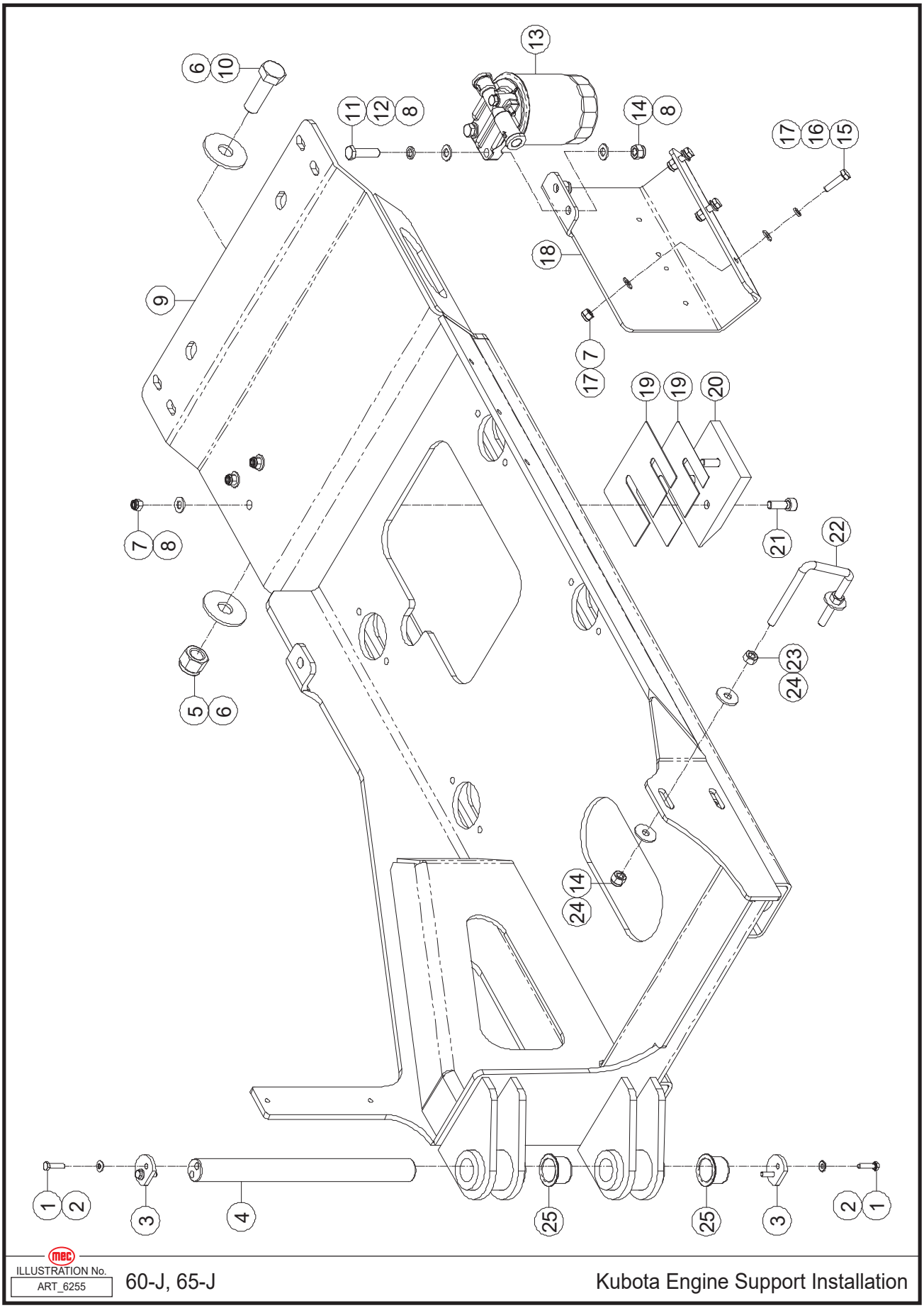

Item	Part Number	Description	Qty.
1	50117	Screw HHCS M06-1.00 × 25 ZP	4
2	48186	Spring Washer	4
3	48187	Cover	2
4	48188	Pin	1
5	50052	Nut NNYL M20-2.50 ZP	1
6	53598	WSHR M20 Flat Fender Washer ZP	2
7	50048	Nut NNYL M08-1.25 ZP	6
8	50002	WSHR M10 Standard Flat Washer ZP	7
9	48662	Support	1
10	50045	Screw HHCS M20-2.50 × 60 ZP	1
11	50237	Screw HHCS M10-1.50 × 40 ZP	2
12	53054	WSHR M10 Spring Washer ZP	2
13	95081	Fuel / Water Separator	1
--	95367	Fuel / Water Filter Element	1
14	50049	Nut NNYL M10-1.50 ZP	4
15	50032	Screw HHCS M08-1.25 × 30 ZP	3
16	53055	WSHR M08 Spring Washer ZP	3
17	50001	WSHR M08 Standard Flat Washer ZP	6
18	48664	Bracket	1
19	48184	Shim	2
20	48665	Sliding Block	1
21	50127	Screw SHCS M10-1.50 × 30 ZP	3
22	48666	U-Bolt	1
23	53373	Nut NHEX M10-1.50 ZP	2
24	53375	WSHR M10 Flat Fender Washer ZP	4
25	48667	Sleeve Bearing	2

Kubota Engine Assembly

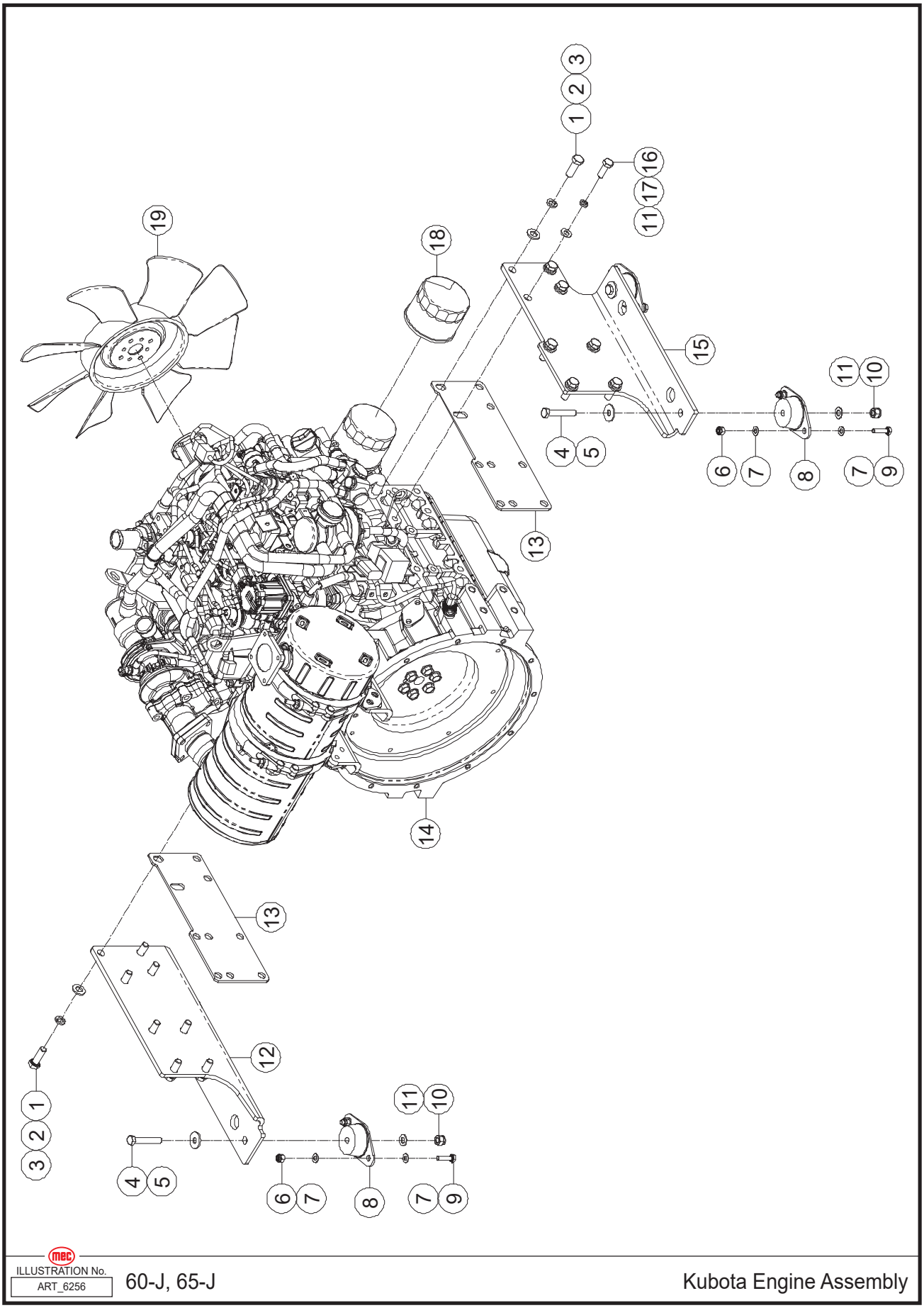

ILLUSTRATION No.
ART_6256

60-J, 65-J

Kubota Engine Assembly

Item	Part Number	Description	Qty.
1	50040	Screw HHCS M12-1.75 × 35 ZP	15
2	53148	WSHR M12 Spring Washer ZP	15
3	50003	WSHR M12 Standard Flat Washer ZP	15
4	50421	Screw HHCS M10-1.50 × 60 ZP	4
5	53375	WSHR M10 Flat Fender Washer ZP	4
6	50048	Nut NNYL M08-1.25 ZP	8
7	50001	WSHR M08 Standard Flat Washer ZP	16
8	48674	Rubber Mounting	4
9	50032	Screw HHCS M08-1.25 × 30 ZP	8
10	50049	Nut NNYL M10-1.50 ZP	4
11	50002	WSHR M10 Standard Flat Washer ZP	5
12	48668	Support	1
13	48669	Shim	2
14	48670	Engine	1
15	48671	Support	1
16	50034	Screw HHCS M10-1.50 × 30 ZP	1
17	53054	WSHR M10 Spring Washer ZP	1
18	92180	Oil Filter Cartridge	1
19	48673	Fan	1

Kubota Engine Cooling System Installation 1

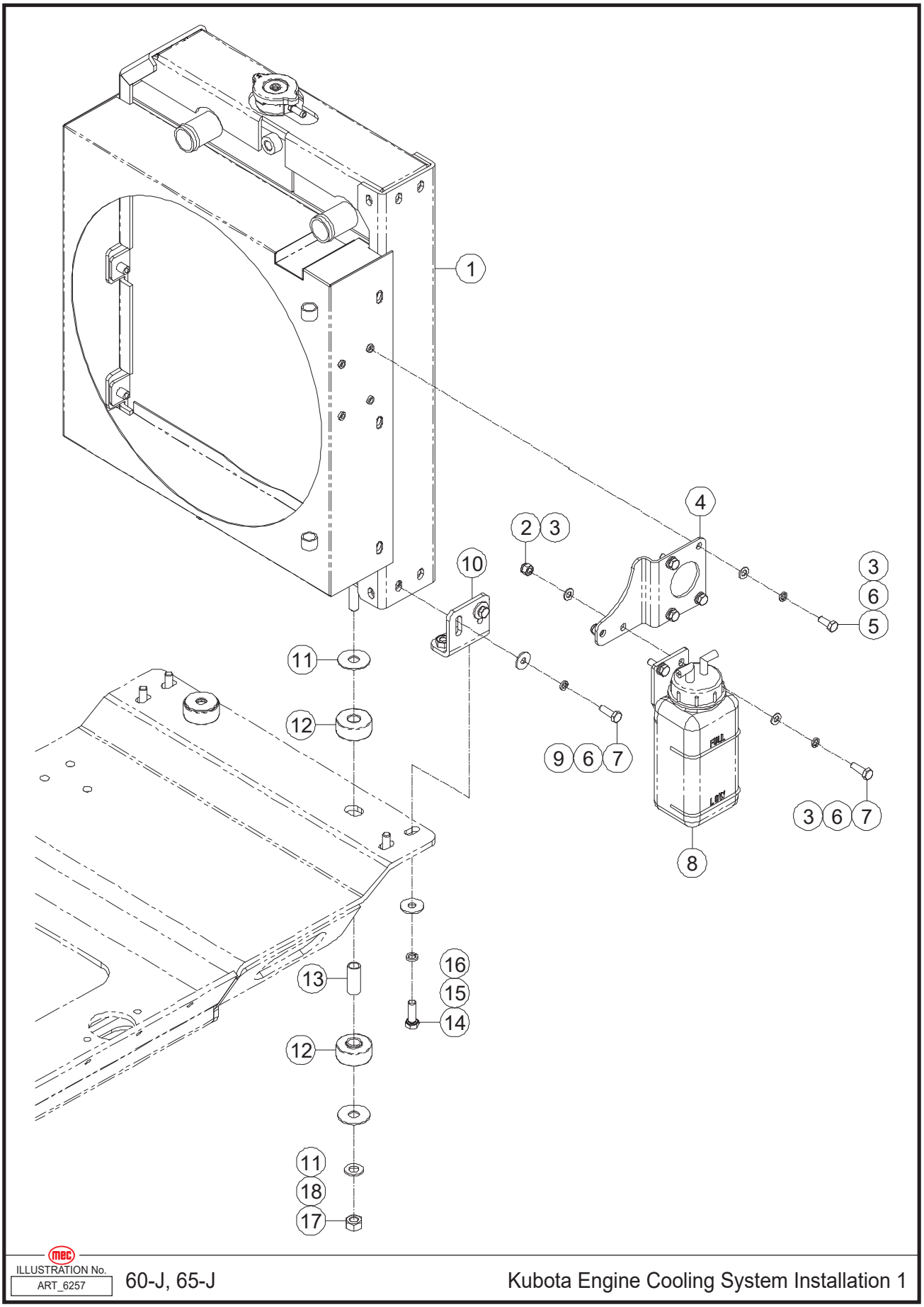

ILLUSTRATION No. ART_6257 60-J, 65-J Kubota Engine Cooling System Installation 1

Item	Part Number	Description	Qty.
1	48675	Radiator	1
2	50048	Nut NNYL M08-1.25 ZP	2
3	50001	WSHR M08 Standard Flat Washer ZP	8
4	48676	Bracket	1
5	50030	Screw HHCS M08-1.25 × 20 ZP	4
6	53055	WSHR M08 Spring Washer ZP	10
7	50031	Screw HHCS M08-1.25 × 25 ZP	6
8	48677	Container-Coolant Overflow	1
9	50218	WSHR M08 Flat Fender Washer ZP	4
10	48678	Bracket	2
11	48679	Washer	4
12	48680	Rubber Ring	4
13	48681	Spacer	2
14	50034	Screw HHCS M10-1.50 × 30 ZP	4
15	53054	WSHR M10 Spring Washer ZP	4
16	53375	WSHR M10 Flat Fender Washer ZP	4
17	53599	Nut NHEX 1/2-13 ZP	2
18	50003	WSHR M12 Standard Flat Washer ZP	2

Kubota Engine Cooling System Installation 2

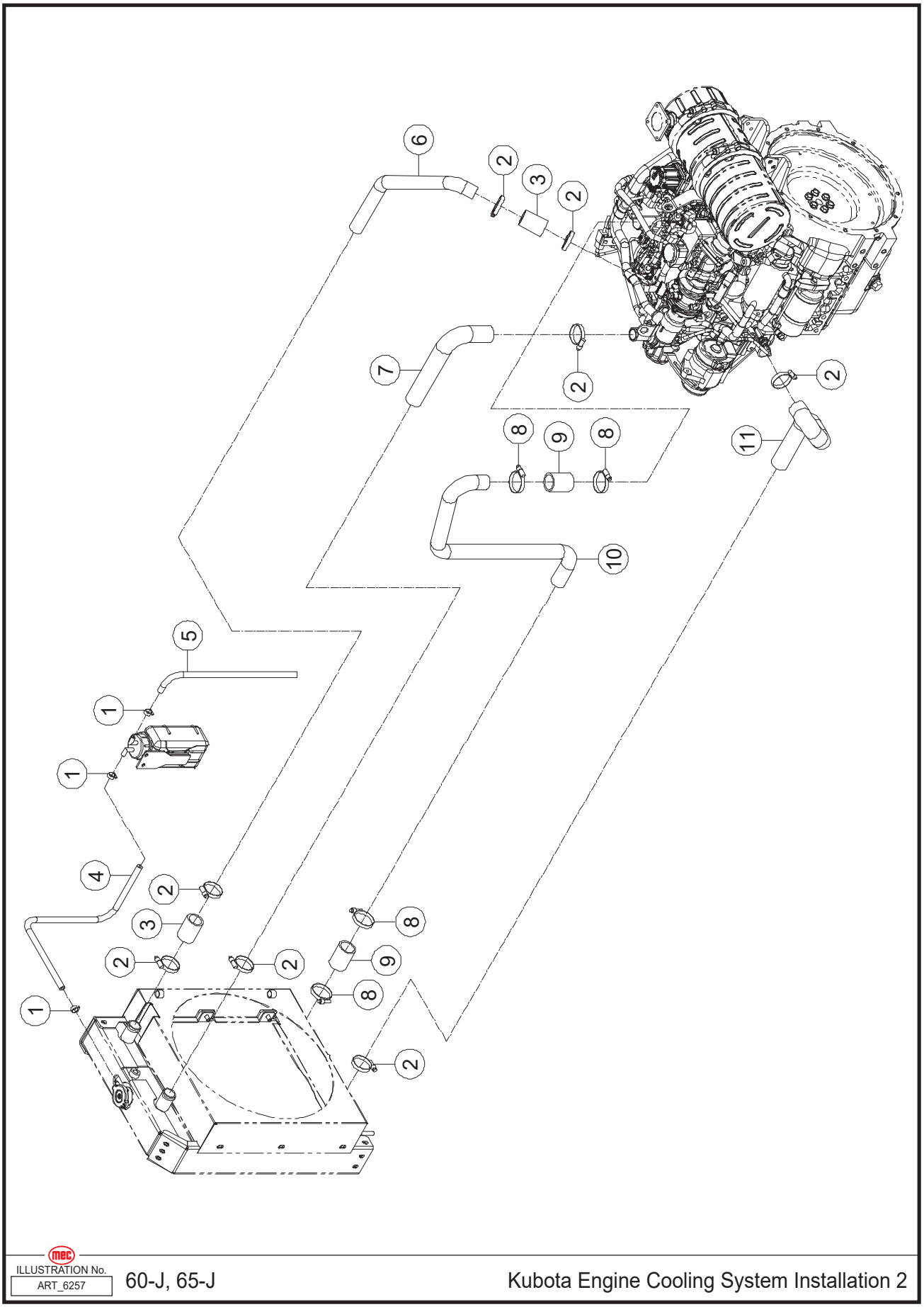

ILLUSTRATION No. ART_6257 60-J, 65-J Kubota Engine Cooling System Installation 2

Item	Part Number	Description	Qty.
1	47632	Clamp	3
2	47629	Clamp	8
3	48782	Hose 1, Engine	2
4	48783	Hose, Radiator to Coolant Bottle	1
5	48784	Hose, Coolant Bottle Drain	1
6	48785	Hose 2, Engine	1
7	48786	Hose 3, Engine	1
8	47630	Clamp	4
9	48787	Hose 4, Engine	2
10	48788	Hose 5, Engine	1
11	48789	Hose 6, Engine	1

Kubota Engine and Pump Installation

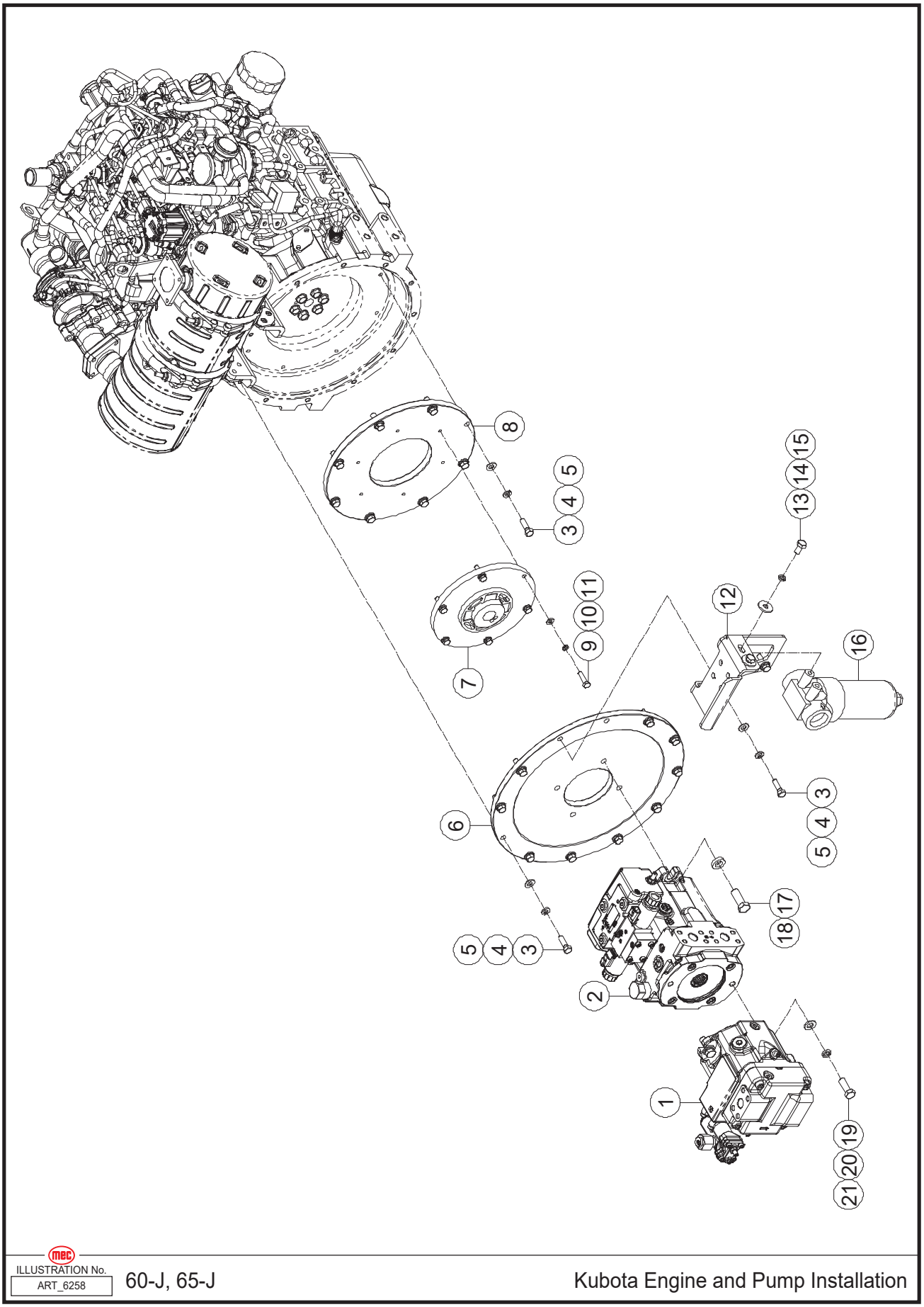

ILLUSTRATION No. ART_6258

60-J, 65-J

Kubota Engine and Pump Installation

Item	Part Number	Description	Qty.
1	48682	Function Pump Assembly	1
2	48683	Drive Pump Assembly	1
3	50556	Screw HHCS 3/8-16 × 1 1/4 ZP	20
4	53316	WSHR 3/8 Spring Washer ZP	20
5	53317	WSHR 3/8 Standard Flat Narrow Washer ZP	20
6	48684	Protection	1
7	48685	Flange	1
8	48686	Support	1
9	50032	Screw HHCS M08-1.25 × 30 ZP	6
10	53055	WSHR M08 Spring Washer ZP	6
11	50001	WSHR M08 Standard Flat Washer ZP	6
12	48687	Bracket	1
13	50215	Screw HHCS M10-1.50 × 20 ZP	2
14	53054	WSHR M10 Spring Washer ZP	2
15	53375	WSHR M10 Flat Fender Washer ZP	2
16	48688	Charge Filter Assembly	1
17	50333	Screw HHCS M14-2.00 × 40 ZP	2
18	48689	Washer	2
19	50040	Screw HHCS M12-1.75 × 35 ZP	2
20	53148	WSHR M12 Spring Washer ZP	2
21	50003	WSHR M12 Standard Flat Washer ZP	2

Kubota Engine Fuel System Installation

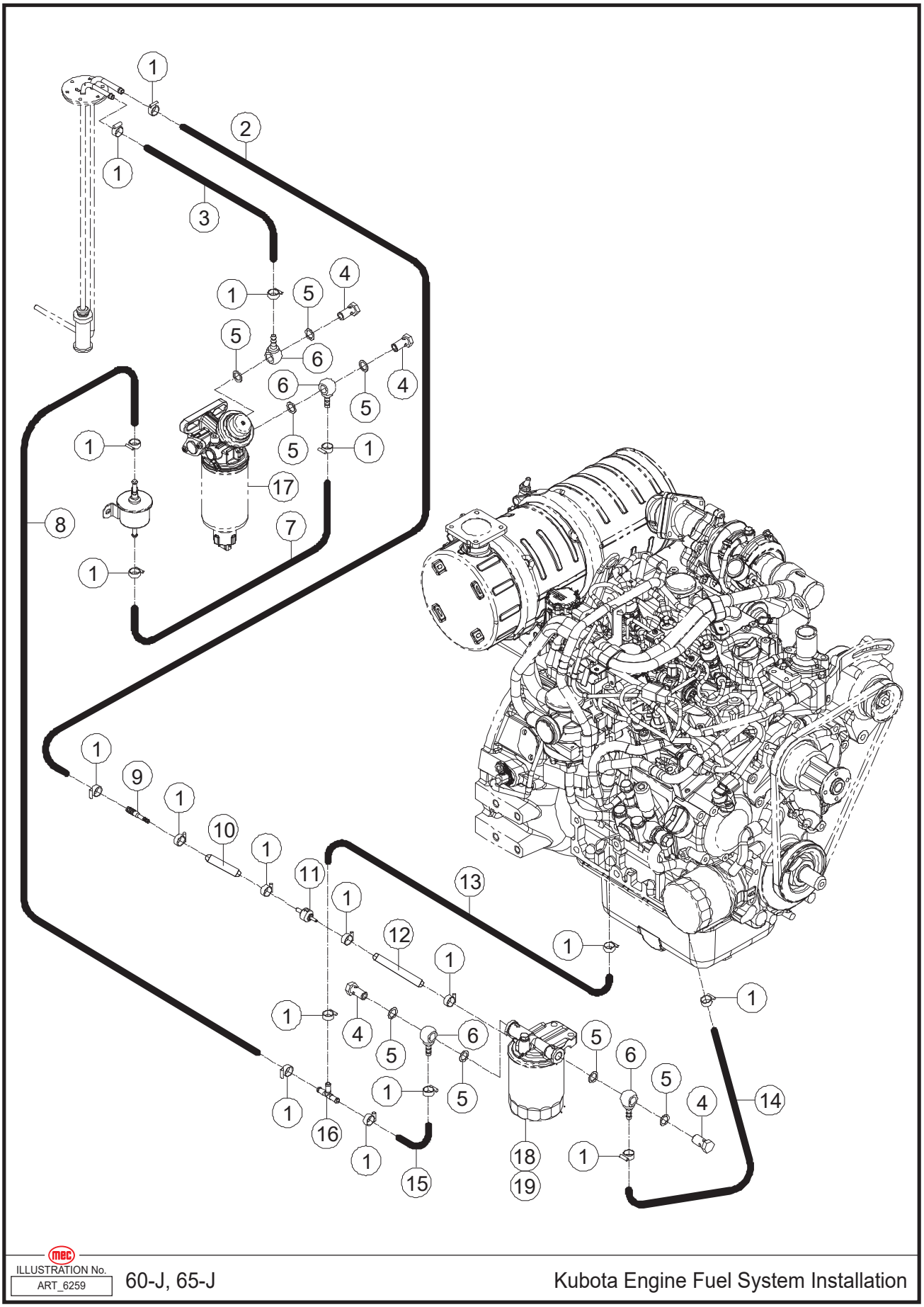

ILLUSTRATION No. ART_6259

60-J, 65-J

Kubota Engine Fuel System Installation

Item	Part Number	Description	Qty.
1	47632	Clamp	18
2	48790	Hose 1	1
3	48791	Hose 4	1
4	48792	Drilled Screw	4
5	48793	Washer	8
6	48794	Pipe Fitting	4
7	48795	Hose 5	1
8	48796	Hose 6	1
9	48797	Fitting, Straight, Reducer	1
10	48798	Hose 2	1
11	48799	Check Valve	1
12	48800	Hose 3B	1
13	48801	Hose 3A	1
14	48802	Hose 8	1
15	48803	Hose 7	1
16	48804	Fitting, Tee	1
17	95503	Filter Element, Fuel Separator	1
18	95081	Filter Assembly With Filter Element	1
19	95367	Fuel Filter Element	1

Kubota Engine Suction System Installation

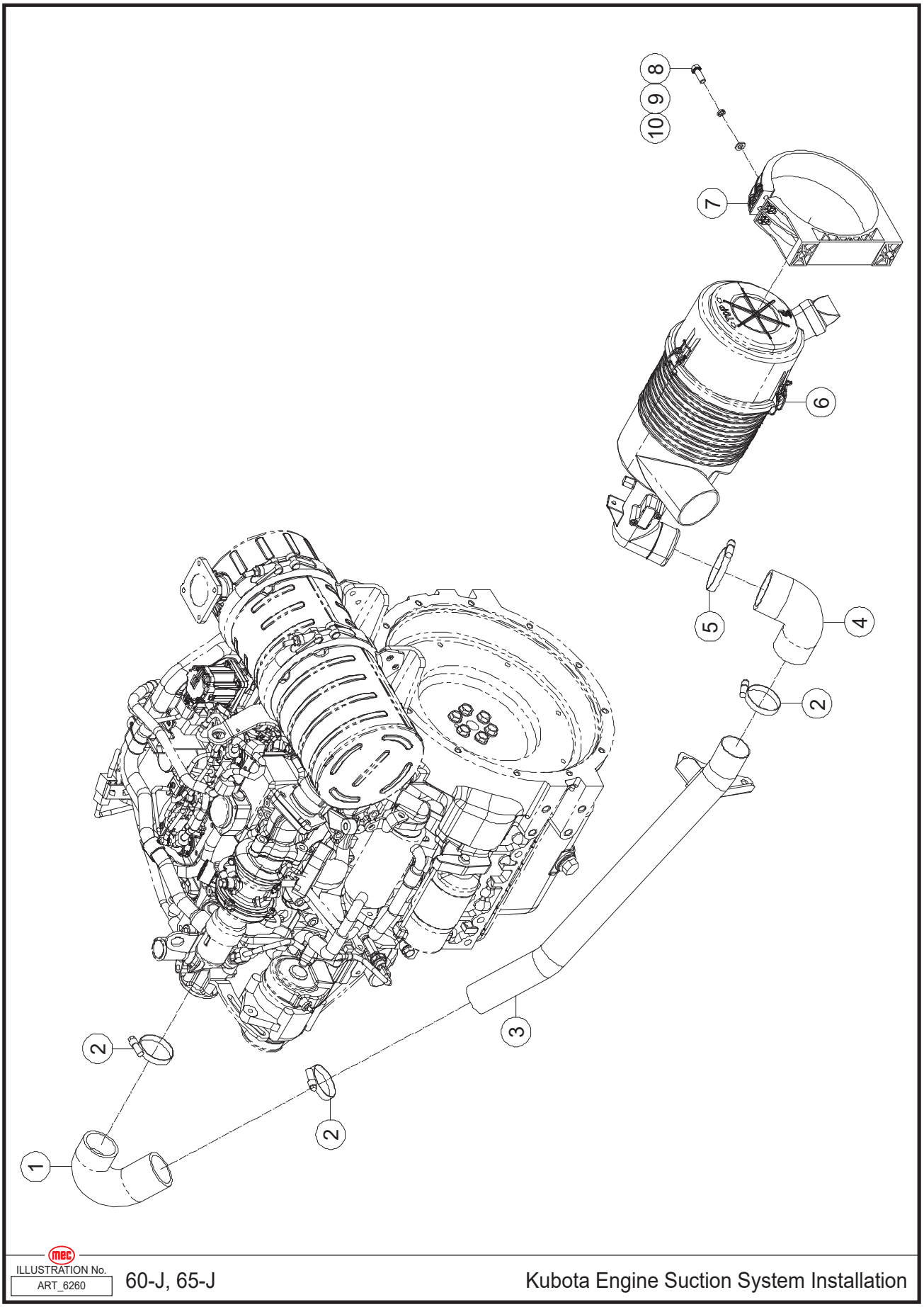

ILLUSTRATION No. ART_6260 60-J, 65-J Kubota Engine Suction System Installation

Item	Part Number	Description	Qty.
1	48805	Engine Connecting Pipe, Elbow	1
2	47630	Clamp	3
3	48806	Connecting Pipe	1
4	48807	Air Filter Connecting Pipe, Elbow	1
5	48808	Clamp	1
6	95080	Complete Air Filter	1
--	95369	Air Filter Element Inner	1
--	95368	Air Filter Element Outer	1
7	48810	Support	1
8	50031	Screw HHCS M08-1.25 × 25 ZP	2
9	53055	WSHR M08 Spring Washer ZP	2
10	50001	WSHR M08 Standard Flat Washer ZP	2

Kubota Engine Exhaust System Installation

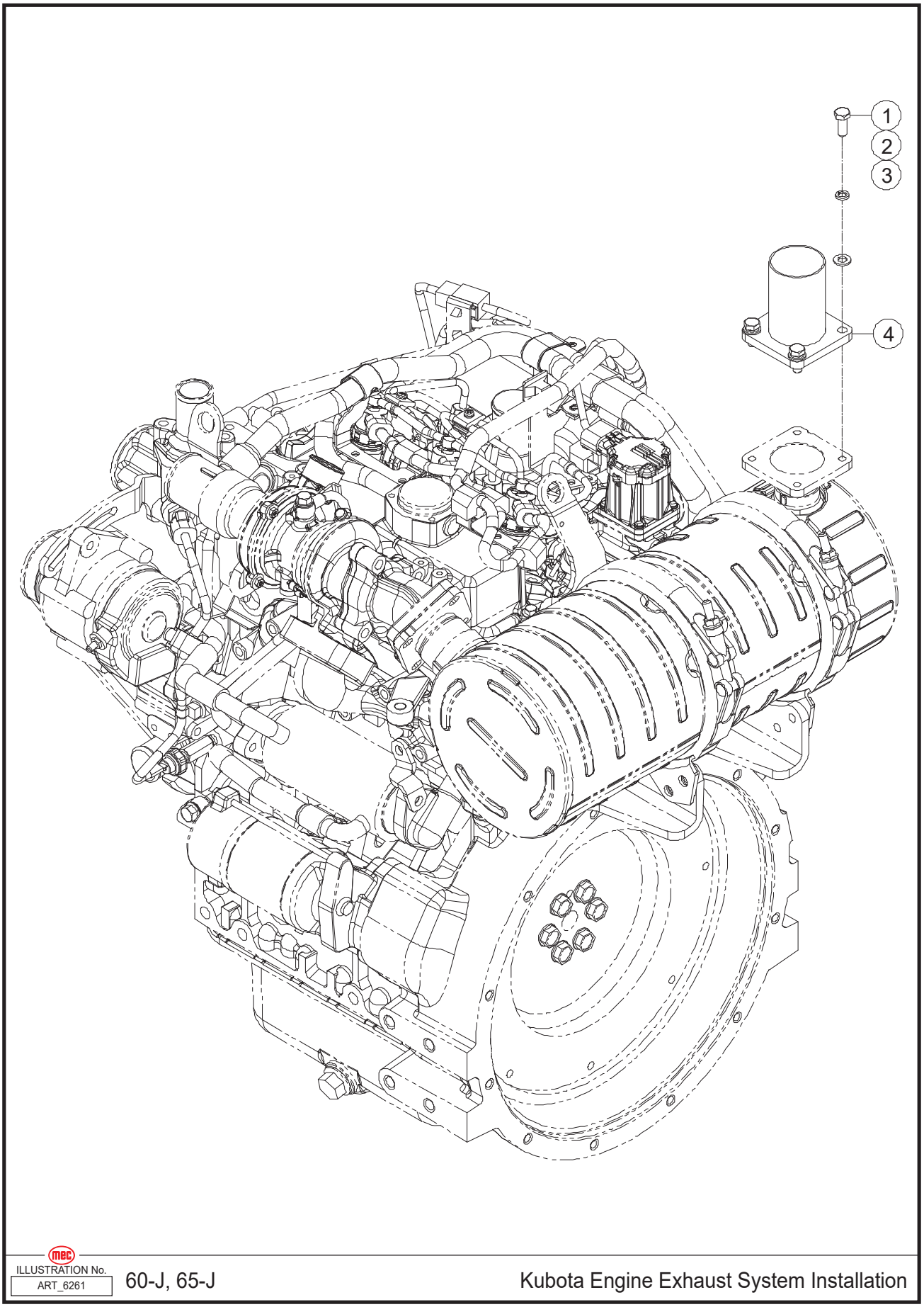

ILLUSTRATION No. ART_6261

60-J, 65-J

Kubota Engine Exhaust System Installation

Item	Part Number	Description	Qty.
1	50030	Screw HHCS M08-1.25 × 20 ZP	4
2	53055	WSHR M08 Spring Washer ZP	4
3	50001	WSHR M08 Standard Flat Washer ZP	4
4	48690	Exhaust Tube	1

Kubota Engine Fuse Installation 1

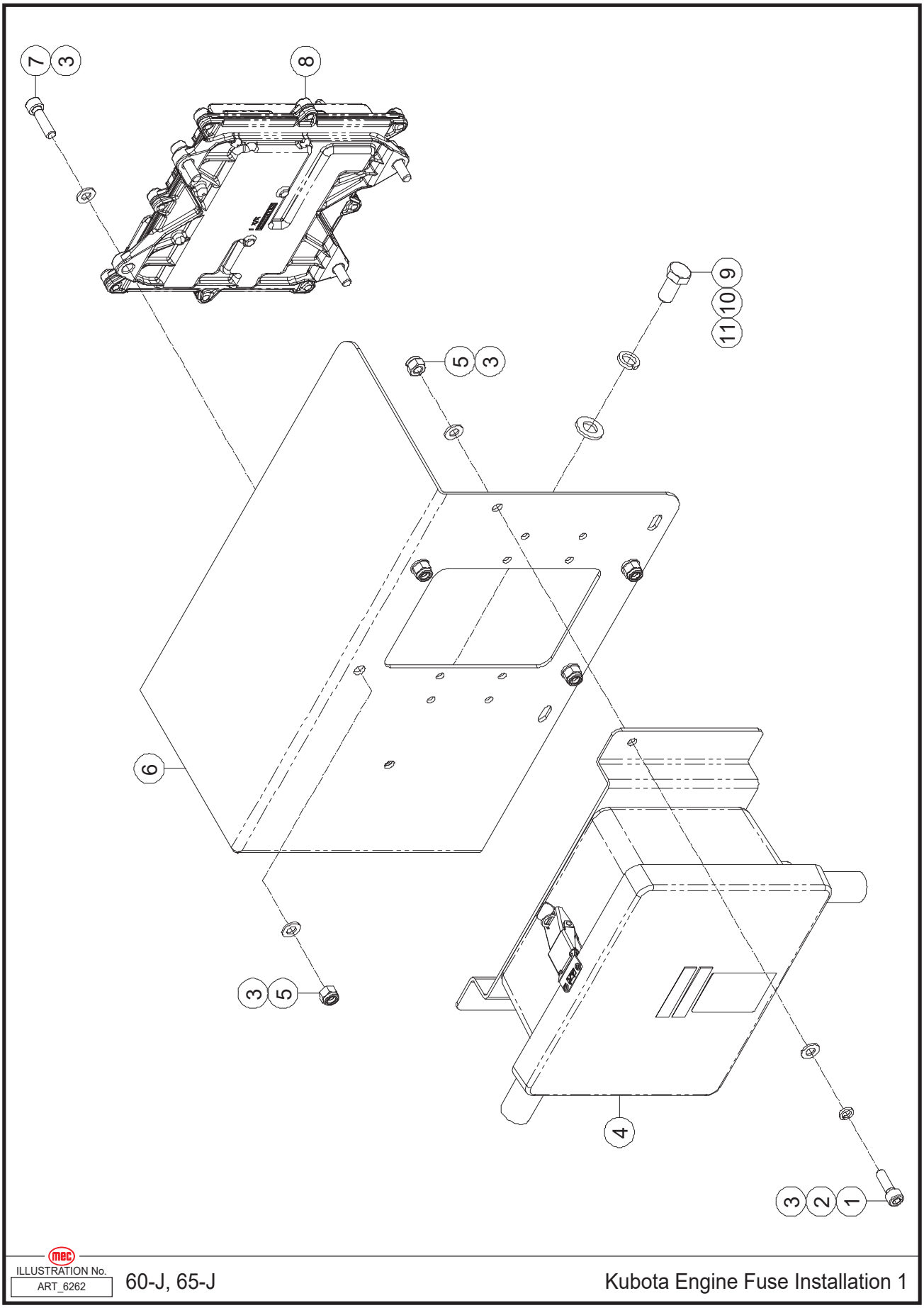

ILLUSTRATION No. ART_6262

60-J, 65-J

Kubota Engine Fuse Installation 1

Item	Part Number	Description	Qty.
1	53210	Screw SHCS M08-1.25 × 25 ZP	2
2	53055	WSHR M08 Spring Washer ZP	2
3	50001	WSHR M08 Standard Flat Washer ZP	12
4	48256	Breaker Box	1
5	50048	Nut NNYL M08-1.25 ZP	6
6	48691	Bracket	1
7	53385	Screw SHCS M08-1.25 × 30 ZP	4
8	48692	Engine ECU	1
9	50038	Screw HHCS M12-1.75 × 25 ZP	4
10	53148	WSHR M12 Spring Washer ZP	4
11	50003	WSHR M12 Standard Flat Washer ZP	4

Kubota Engine Fuse Installation 2

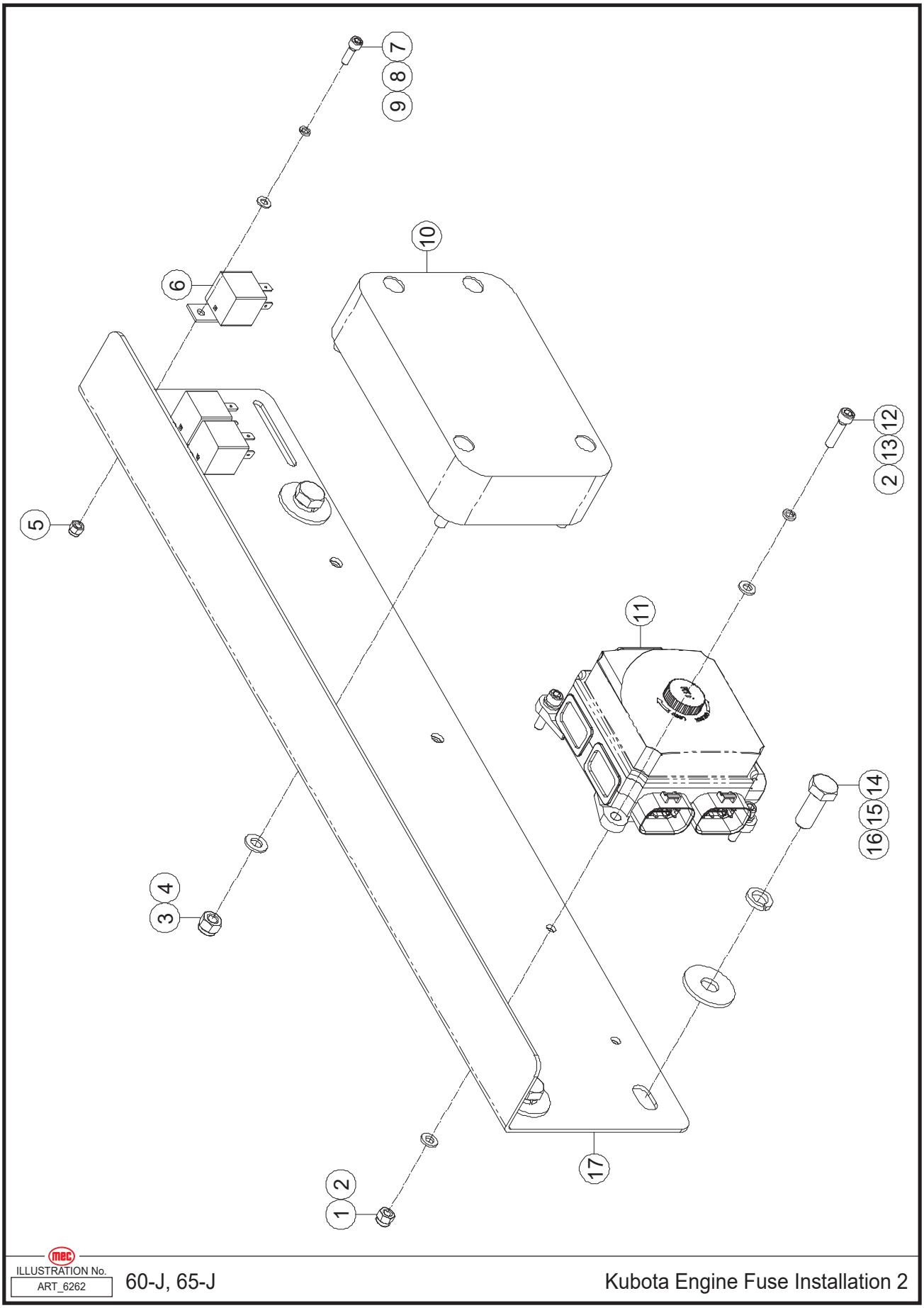

ILLUSTRATION No. ART_6262

60-J, 65-J

Kubota Engine Fuse Installation 2

Item	Part Number	Description	Qty.
1	50047	Nut NNYL M06-1.00 ZP	4
2	50000	WSHR M06 Standard Flat Washer ZP	8
3	50048	Nut NNYL M08-1.25 ZP	4
4	50001	WSHR M08 Standard Flat Washer ZP	4
5	50524	Nut NNYL M05-0.80 ZP	3
6	42342	Relay	3
7	50359	Screw SHCS M05-0.80 × 16 ZP	3
8	53043	WSHR M05 Spring Washer ZP	3
9	53038	WSHR M05 Standard Flat Washer ZP	3
10	48693	Fuse Box	1
--	47700	Fuse Kit	1
11	47701	Power Distribution Module (Refer to page 212)	1
12	53123	Screw SHCS M06-1.00 × 25 ZP	4
13	53046	WSHR M06 Spring Washer ZP	4
14	50039	Screw HHCS M12-1.75 × 30 ZP	4
15	53148	WSHR M12 Spring Washer ZP	4
16	53478	WSHR M12 Flat Fender Washer ZP	4
17	48694	Bracket	1

Kubota Engine Fuel Tank Installation

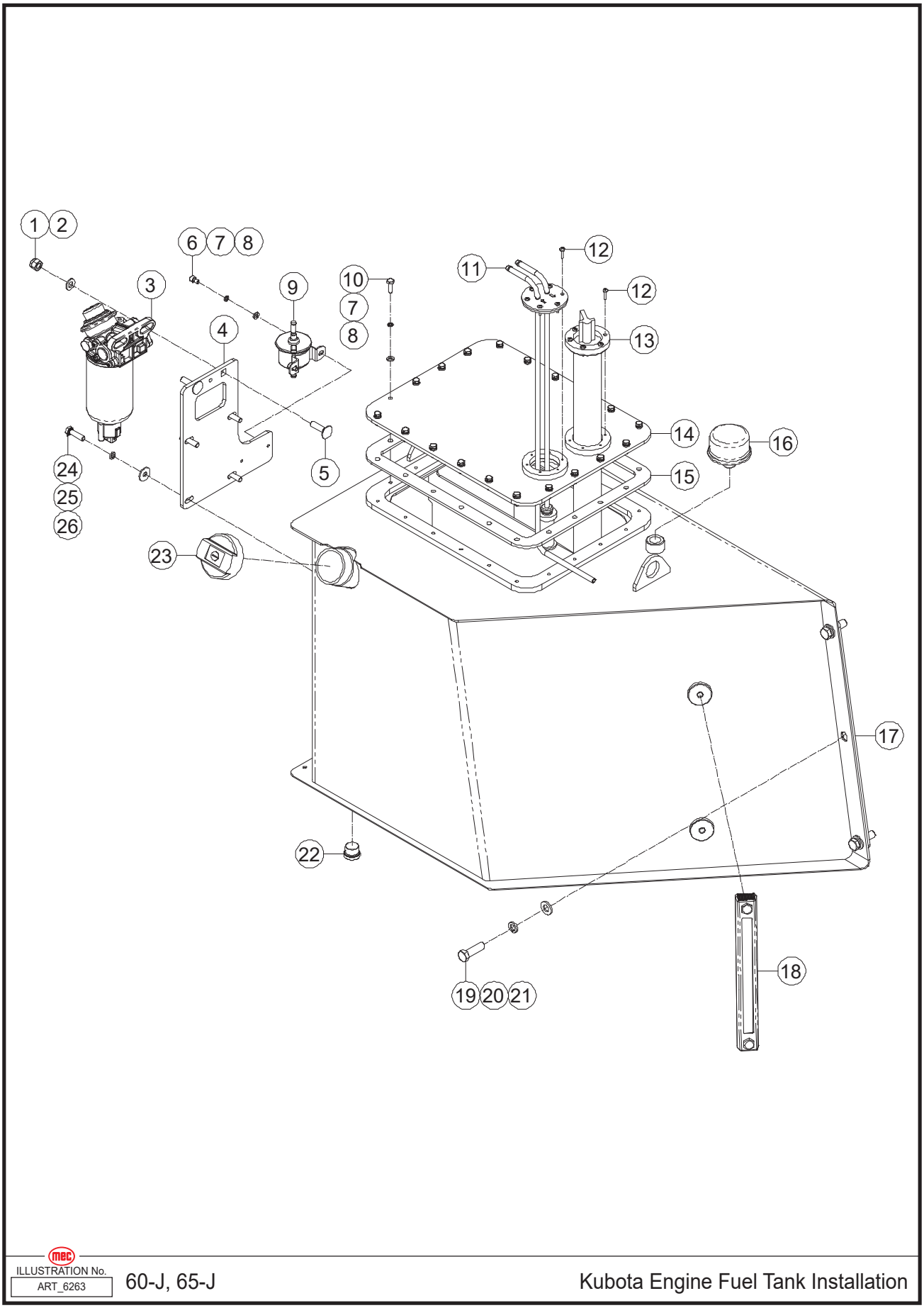

ILLUSTRATION No. ART_6263 60-J, 65-J Kubota Engine Fuel Tank Installation

Item	Part Number	Description	Qty.
1	50049	Nut NNYL M10-1.50 ZP	2
2	50002	WSHR M10 Standard Flat Washer ZP	2
3	95087	Fuel / Water Separator	1
--	95503	Fuel / Water Filter Element	1
--	95549	Fuel / Water Switch	1
4	48696	Bracket	1
5	53558	Square Neck Carriage Bolt M10-1.50 × 35 ZP	2
6	53484	Screw SHCS M06-1.00 × 10 ZP	2
7	53046	WSHR M06 Spring Washer ZP	22
8	50000	WSHR M06 Standard Flat Washer ZP	22
9	95088	Fuel Pump	1
10	50028	Screw HHCS M06-1.00 × 20 ZP	20
11	48697	Suction Pipe	1
12	53520	Screw PHMS M04-0.70 × 16 ZP	12
13	47685	Fuel Level Sensor	1
14	47683	Cover	1
15	47684	Seal	1
16	47687	Filter	1
17	48698	Fuel Tank	1
18	47688	Fuel Level Indicator	1
19	53247	Screw HHCS M12-1.75 × 40 ZP	6
20	53148	WSHR M12 Spring Washer ZP	6
21	50003	WSHR M12 Standard Flat Washer ZP	6
22	47693	Tank Plug	1
23	47692	Fuel Tank Cap	1
24	50032	Screw HHCS M08-1.25 × 30 ZP	4
25	53055	WSHR M08 Spring Washer ZP	4
26	50218	WSHR M08 Flat Fender Washer ZP	4

Perkins Engine Support Installation

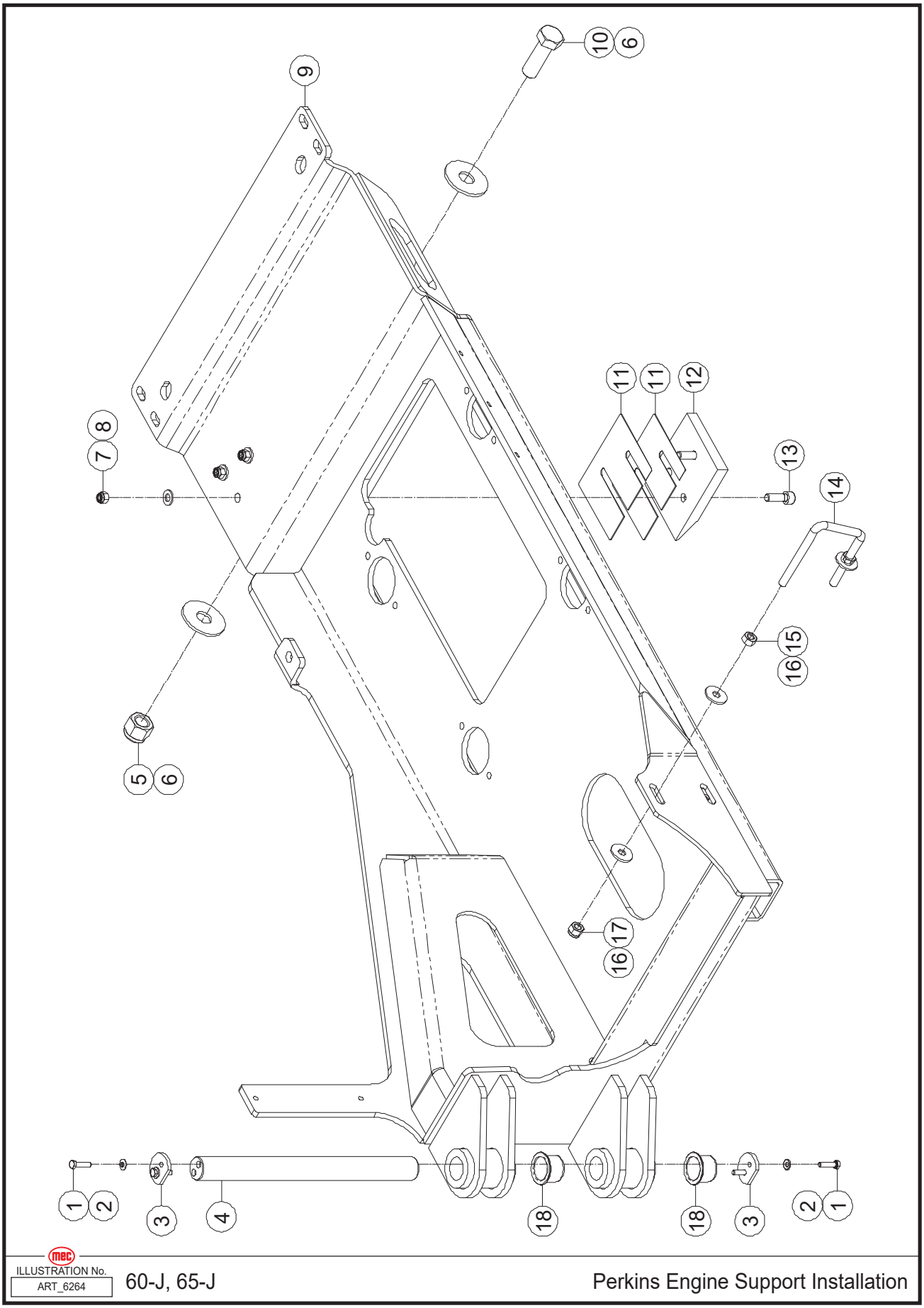

Item	Part Number	Description	Qty.
1	50117	Screw HHCS M06-1.00 × 25 ZP	4
2	48186	Spring Washer	4
3	48187	Cover	2
4	48188	Pin	1
5	50052	Nut NNYL M20-2.50 ZP	1
6	53598	WSHR M20 Flat Fender Washer ZP	2
7	50048	Nut NNYL M08-1.25 ZP	3
8	50002	WSHR M10 Standard Flat Washer ZP	3
9	48699	Support	1
10	50045	Screw HHCS M20-2.50 × 60 ZP	1
11	48184	Shim	2
12	48665	Sliding Block	1
13	50127	Screw SHCS M10-1.50 × 30 ZP	3
14	48666	U-Bolt	1
15	53373	Nut NHEX M10-1.50 ZP	2
16	53375	WSHR M10 Flat Fender Washer ZP	4
17	50049	Nut NNYL M10-1.50 ZP	2
18	48667	Sleeve Bearing	2

Perkins Engine Assembly

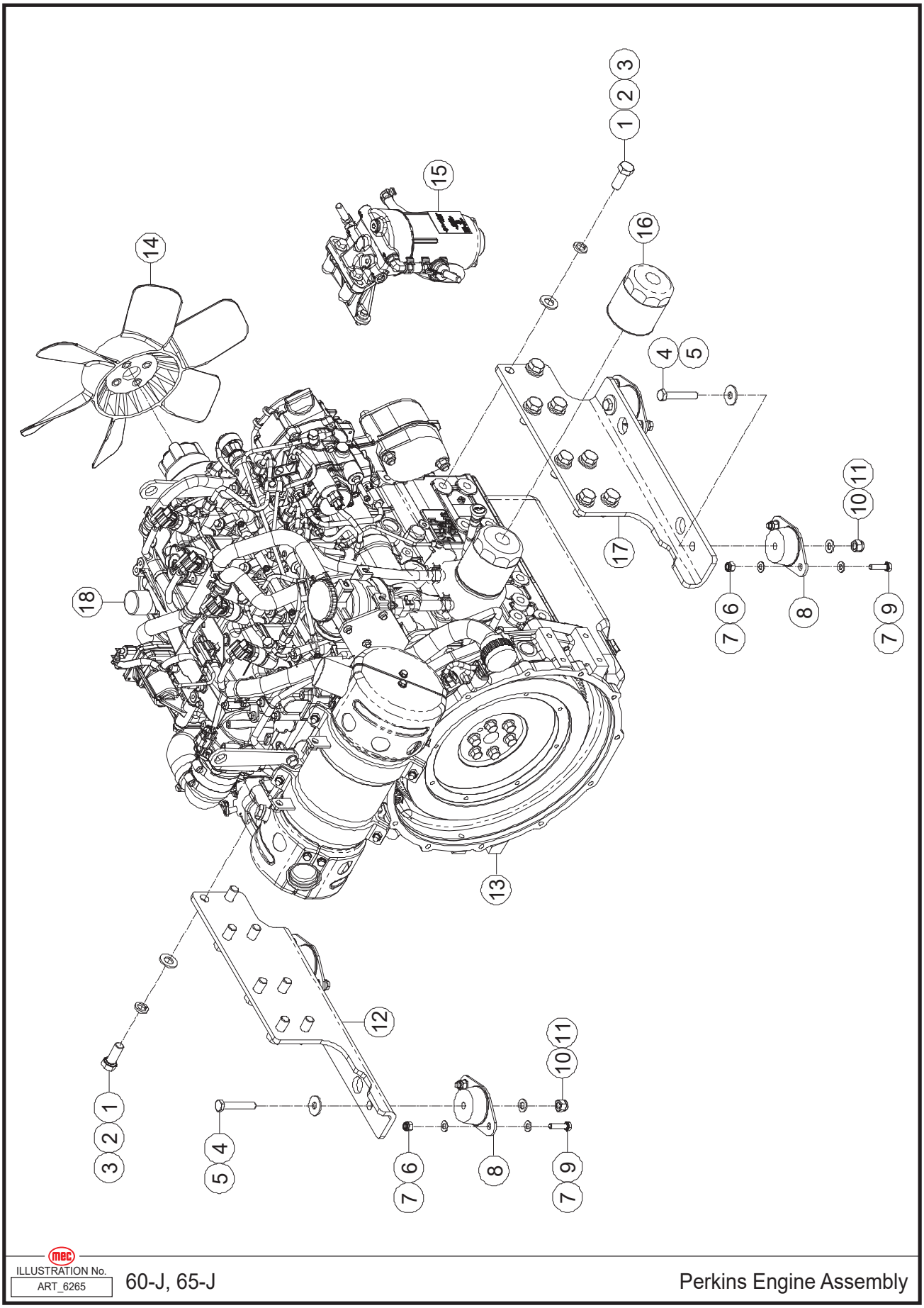

ILLUSTRATION No.
ART_6265

60-J, 65-J

Perkins Engine Assembly

Item	Part Number	Description	Qty.
1	53047	Screw HHCS M14-2.00 × 35 ZP	16
2	53048	WSHR M14 Spring Washer ZP	16
3	53049	WSHR M14 Standard Flat Washer ZP	16
4	50421	Screw HHCS M10-1.50 × 60 ZP	4
5	53375	WSHR M10 Flat Fender Washer ZP	4
6	50048	Nut NNYL M08-1.25 ZP	8
7	50001	WSHR M08 Standard Flat Washer ZP	16
8	48674	Rubber Mounting	4
9	50032	Screw HHCS M08-1.25 × 30 ZP	8
10	50049	Nut NNYL M10-1.50 ZP	4
11	50002	WSHR M10 Standard Flat Washer ZP	4
12	48700	Support	1
13	48701	Engine	1
14	48702	Fan	1
15	48703	Fuel / Water Separator Filter	1
--	96837	Fuel / Water Separator Filter Element	1
16	96836	Oil Filter Cartridge	1
17	48705	Support	1
18	96982	Alternator	1

Perkins Engine Cooling System Installation 1

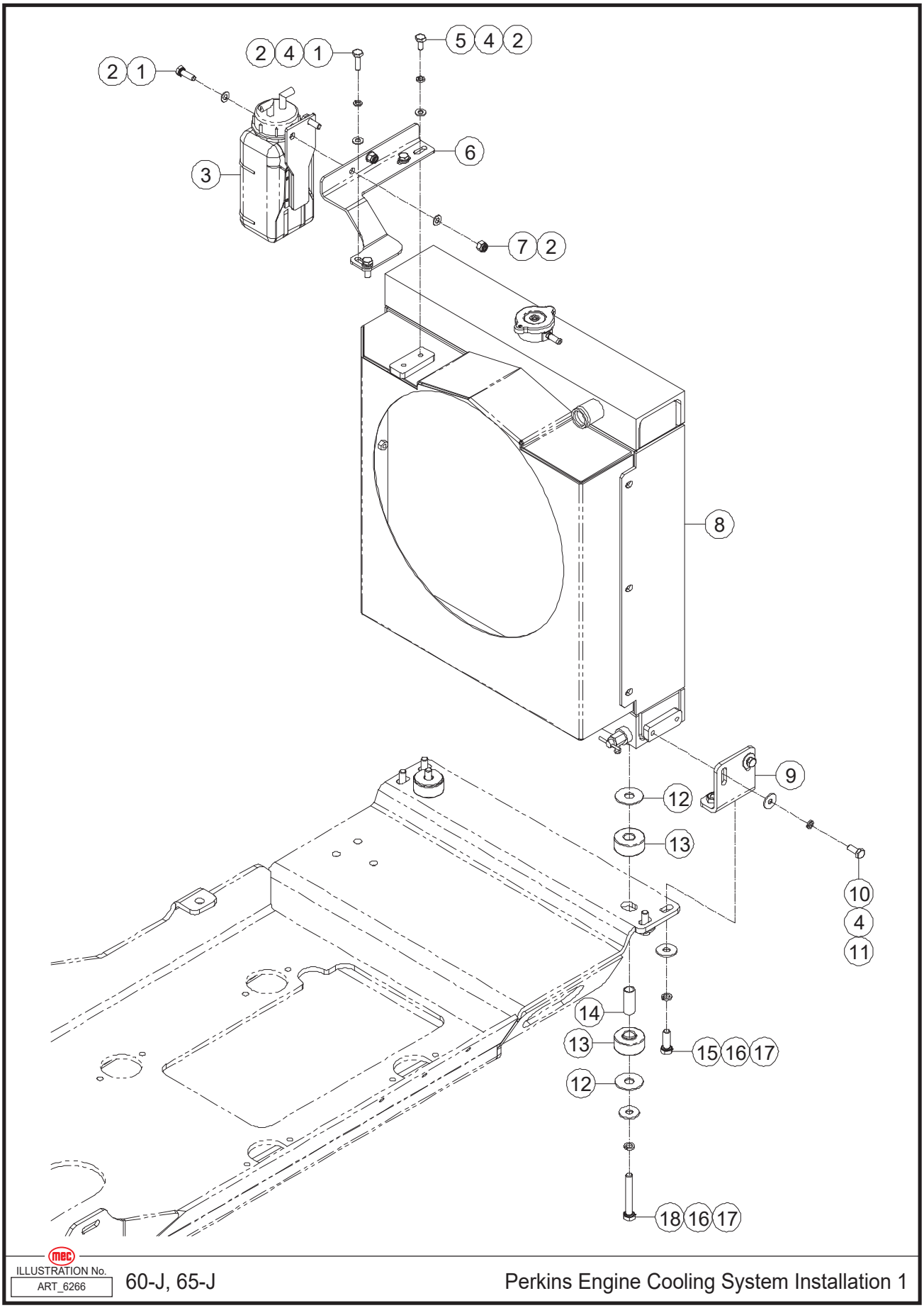

ILLUSTRATION No. ART_6266

60-J, 65-J

Perkins Engine Cooling System Installation 1

Item	Part Number	Description	Qty.
1	50031	Screw HHCS M08-1.25 × 25 ZP	4
2	50001	WSHR M08 Standard Flat Washer ZP	8
3	48677	Container-Coolant Overflow	1
4	53055	WSHR M08 Spring Washer ZP	8
5	53154	Screw HHCS M08-1.25 × 16 ZP	2
6	48706	Bracket	1
7	50048	Nut NNYL M08-1.25 ZP	2
8	48707	Radiator	1
9	48708	Bracket	2
10	50030	Screw HHCS M08-1.25 × 20 ZP	4
11	50218	WSHR M08 Flat Fender Washer ZP	4
12	48679	Washer	4
13	48680	Rubber Ring	4
14	48681	Spacer	2
15	50034	Screw HHCS M10-1.50 × 30 ZP	4
16	53054	WSHR M10 Spring Washer ZP	6
17	53375	WSHR M10 Flat Fender Washer ZP	6
18	50022	Screw HHCS M10-1.50 × 70 ZP	2

Perkins Engine Cooling System Installation 2

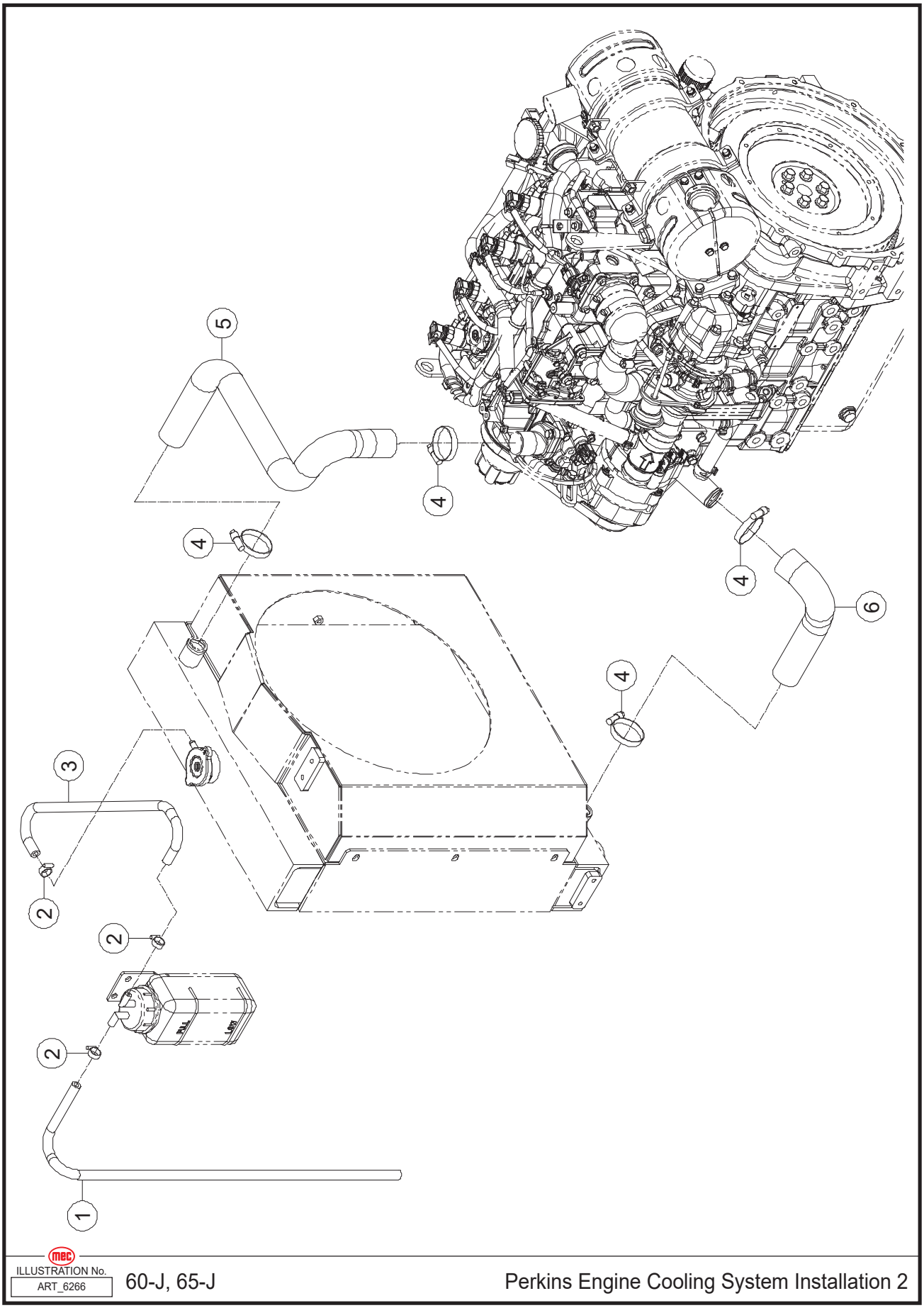

ILLUSTRATION No. ART_6266

60-J, 65-J

Perkins Engine Cooling System Installation 2

Item	Part Number	Description	Qty.
1	48811	Hose, Coolant Bottle Drain	1
2	47632	Clamp	3
3	48812	Hose, Radiator to Coolant Bottle	1
4	47629	Clamp	4
5	48813	Hose, Radiator to Engine	1
6	48814	Hose, Engine Elbow	1

Perkins Engine and Pump Installation

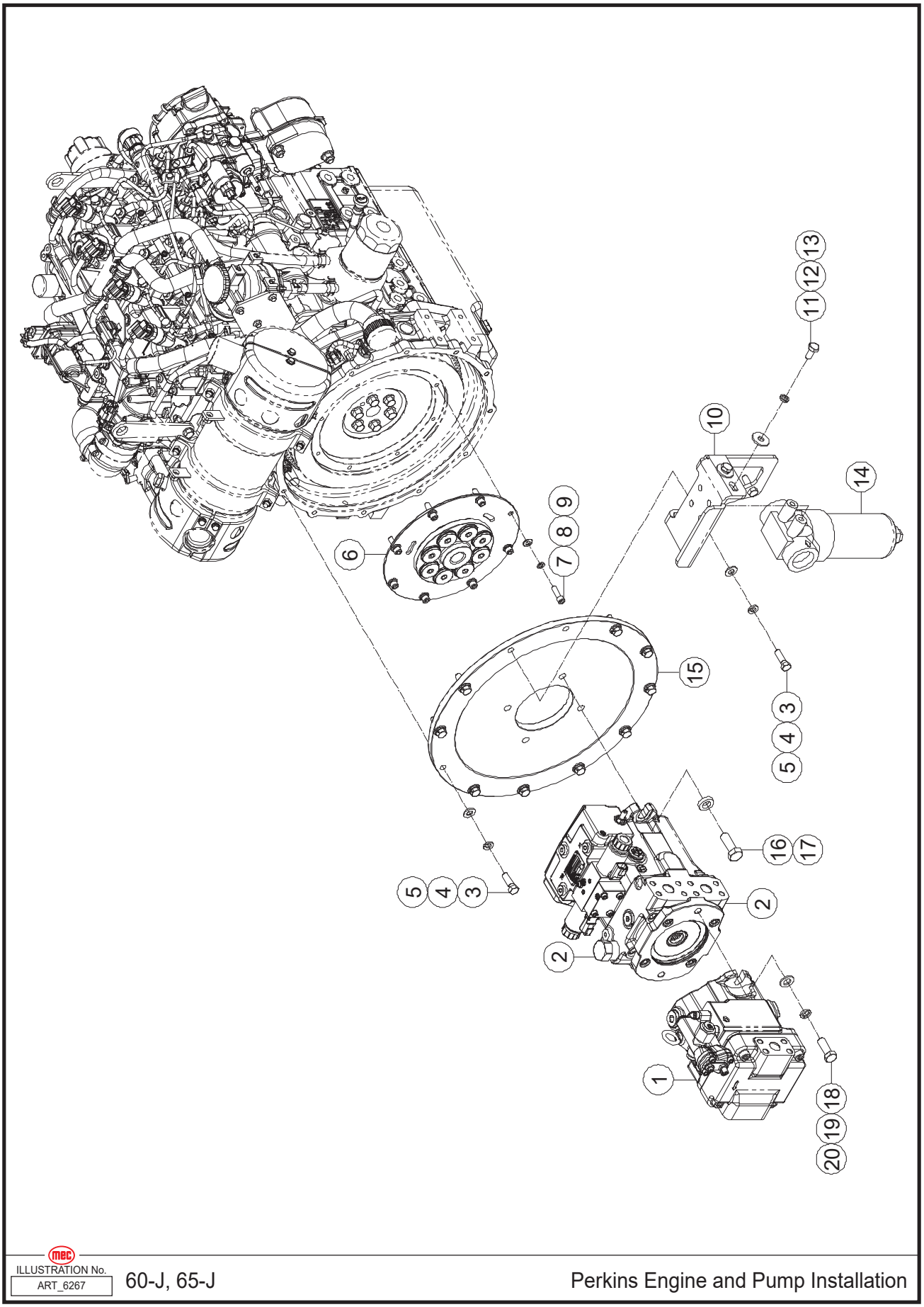

ILLUSTRATION No. ART_6267

60-J, 65-J

Perkins Engine and Pump Installation

Item	Part Number	Description	Qty.
1	48682	Function Pump Assembly	1
2	48709	Drive Pump Assembly	1
3	50556	Screw HHCS 3/8-16 × 1 1/4 ZP	12
4	53316	WSHR 3/8 Spring Washer ZP	12
5	53317	WSHR 3/8 Standard Flat Narrow Washer ZP	12
6	48710	Flange	1
7	53600	Screw SHCS 5/16-18 × 1 ZP	8
8	53055	WSHR M08 Spring Washer ZP	8
9	50001	WSHR M08 Standard Flat Washer ZP	8
10	48687	Bracket	1
11	50215	Screw HHCS M10-1.50 × 20 ZP	2
12	53054	WSHR M10 Spring Washer ZP	2
13	53375	WSHR M10 Flat Fender Washer ZP	2
14	48688	Charge Filter Assembly	1
15	48684	Protection	1
16	50333	Screw HHCS M14-2.00 × 40 ZP	2
17	48689	Washer	2
18	50040	Screw HHCS M12-1.75 × 35 ZP	2
19	53148	WSHR M12 Spring Washer ZP	2
20	50003	WSHR M12 Standard Flat Washer ZP	2

Perkins Engine Fuel System Installation

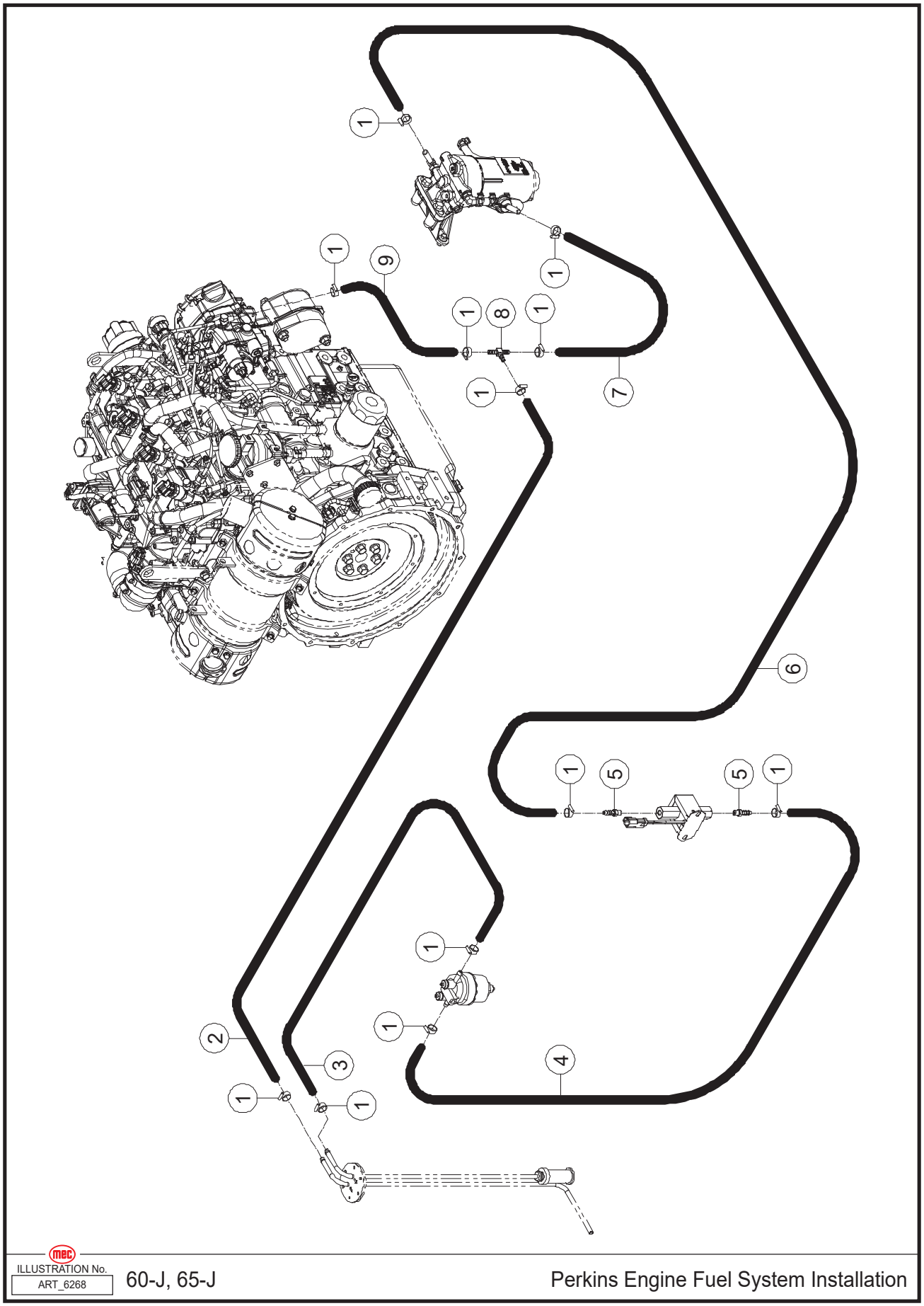

ILLUSTRATION No. ART_6268

60-J, 65-J

Perkins Engine Fuel System Installation

Item	Part Number	Description	Qty.
1	47632	Clamp	12
2	48815	Hose, Fuel Suction to Tee Fitting	1
3	48816	Hose, Fuel Suction to Separator Filter	1
4	48817	Hose, Separator Filter to Pipe Fitting	1
5	48818	Pipe Fitting	2
6	48819	Hose, Separator Filter to Pipe Fitting	1
7	48820	Hose, Tee Fitting to Separator Filter	1
8	48821	Fitting, Tee	1
9	48822	Hose, Engine to Tee Fitting	1

Perkins Engine Suction System Installation

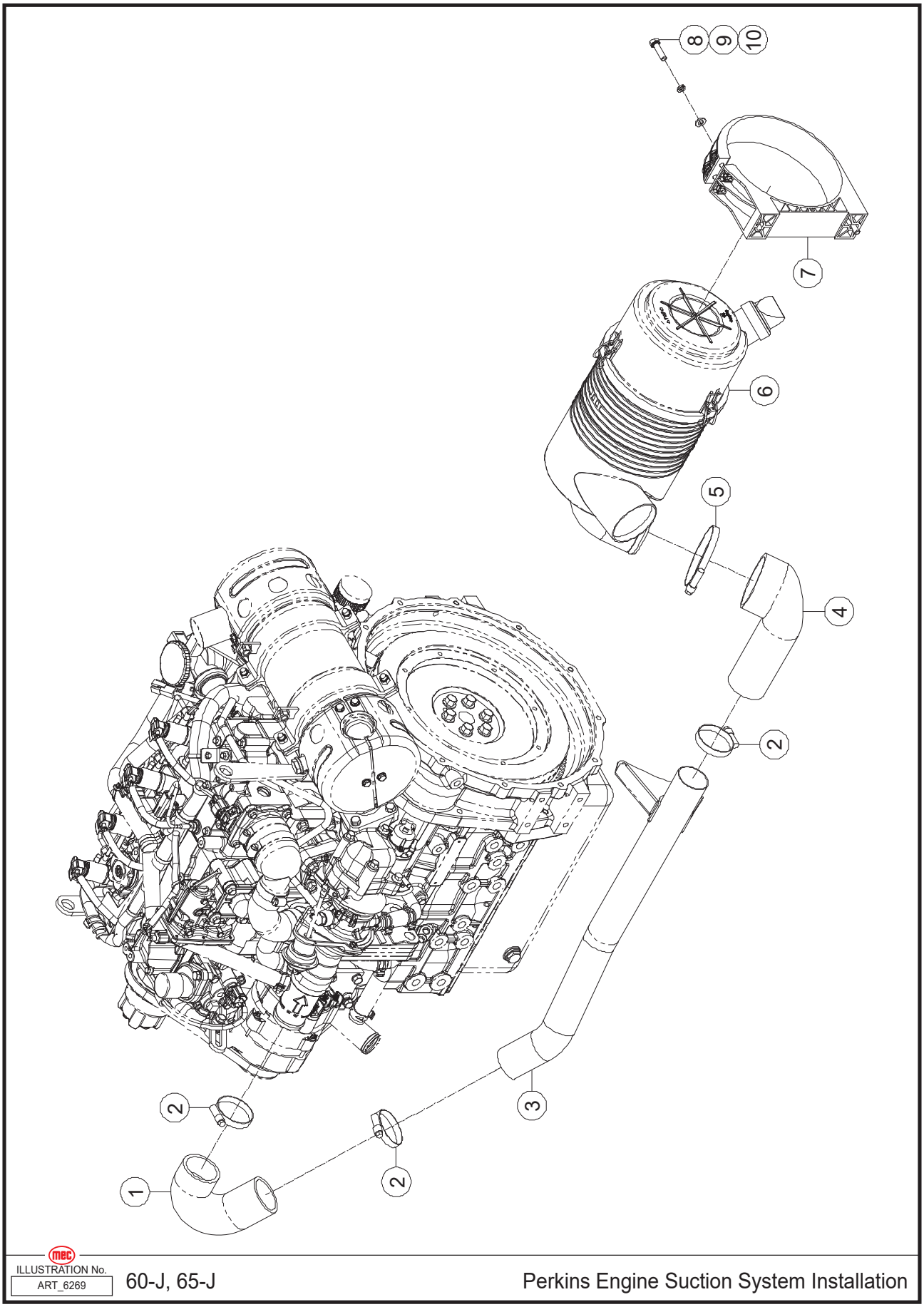

ILLUSTRATION No. ART_6269 60-J, 65-J Perkins Engine Suction System Installation

Item	Part Number	Description	Qty.
1	48757	Engine Connecting Pipe, Elbow	1
2	47630	Clamp	3
3	48760	Connecting Pipe	1
4	48823	Air Filter Connecting Pipe, Elbow	1
5	47671	Clamp	1
6	48824	Complete Air Filter	1
7	48825	Support	1
8	50032	Screw HHCS M08-1.25 × 30 ZP	2
9	53055	WSHR M08 Spring Washer ZP	2
10	50001	WSHR M08 Standard Flat Washer ZP	2

Perkins Engine Exhaust System Installation

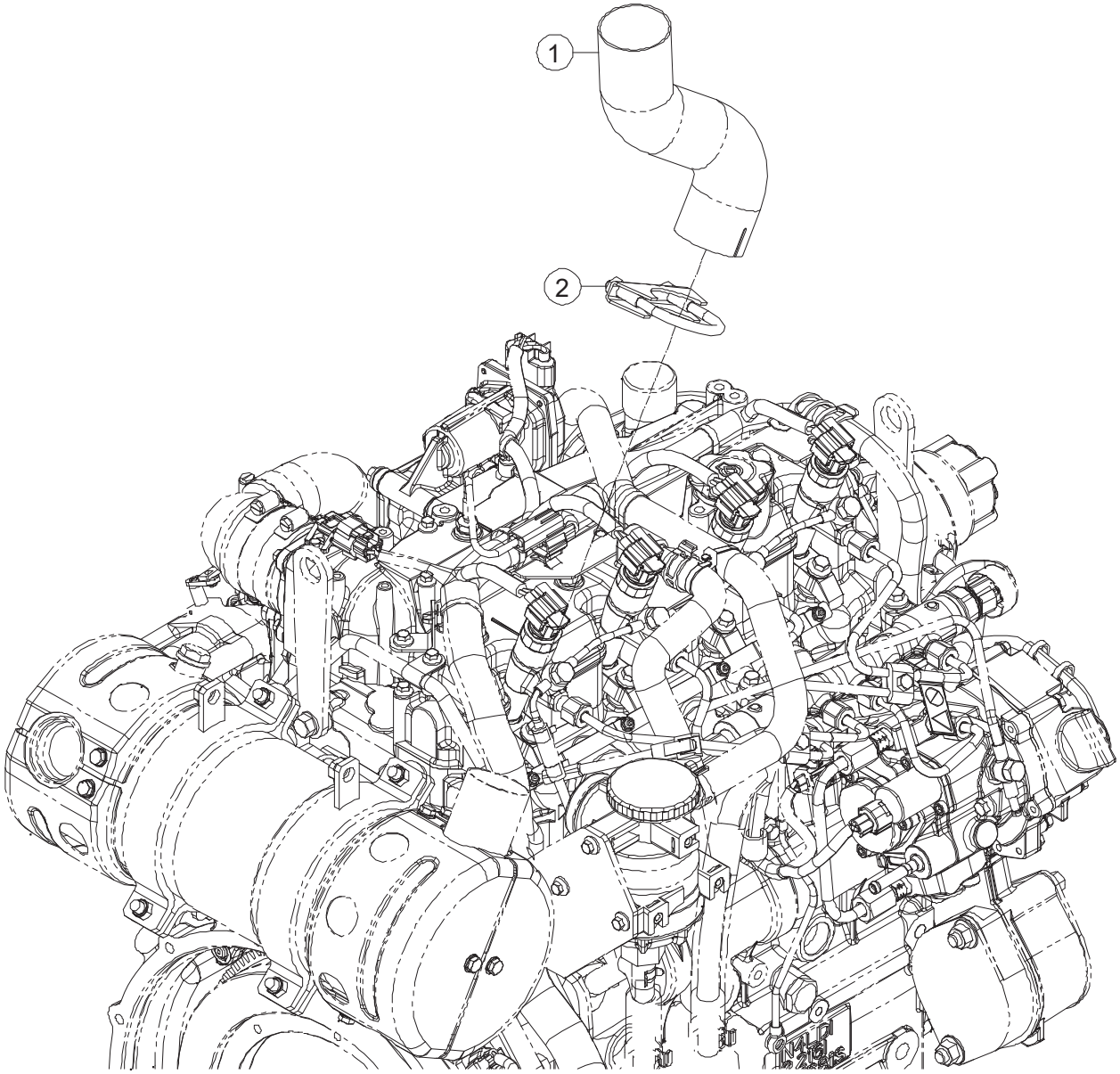

ILLUSTRATION No. ART_6270

60-J, 65-J

Perkins Engine Exhaust System Installation

Item	Part Number	Description	Qty.
1	48826	Exhaust Tube	1
2	48827	Clamp	1

Perkins Fuse Installation 1

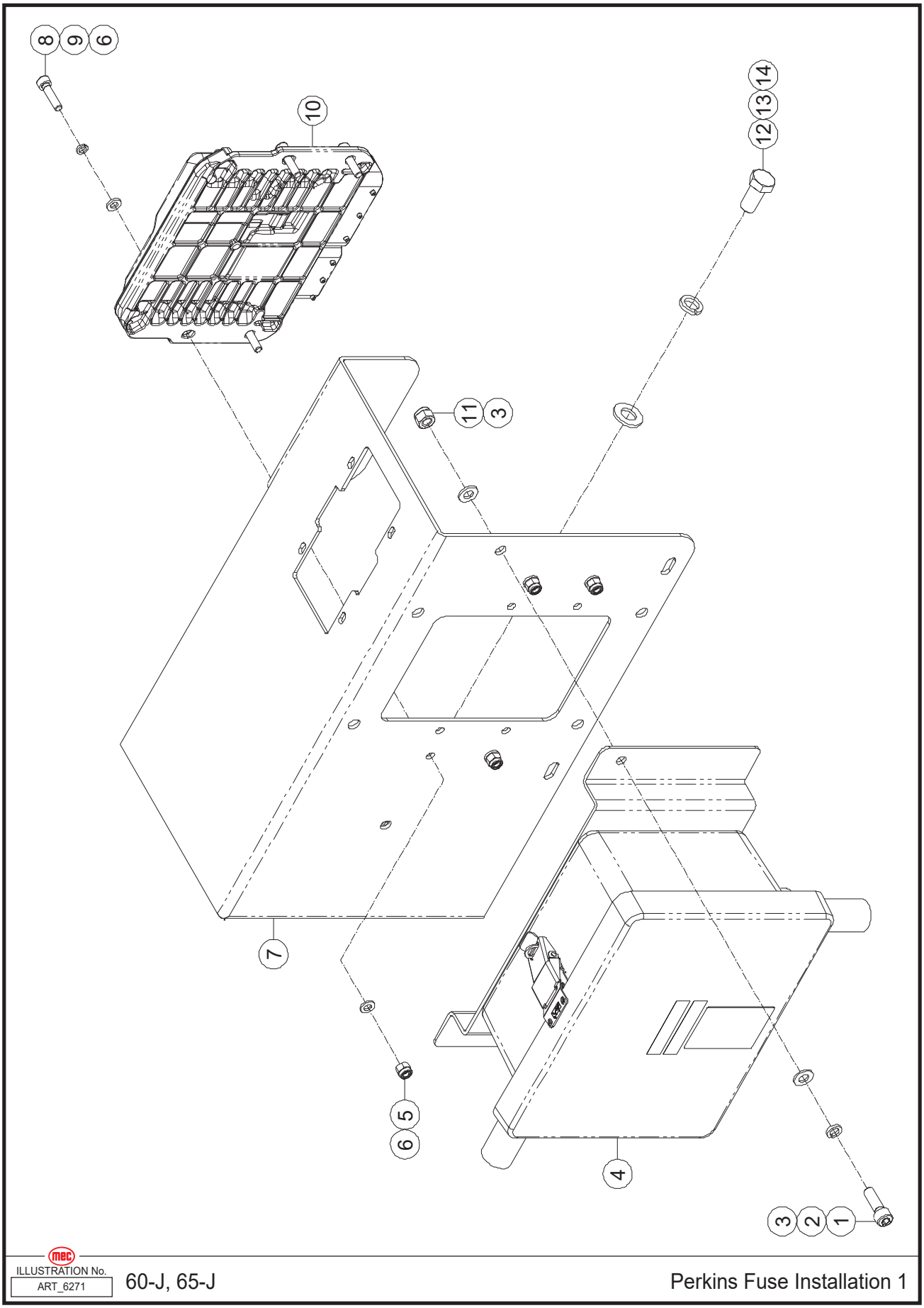

ILLUSTRATION No. ART_6271

60-J, 65-J

Perkins Fuse Installation 1

Item	Part Number	Description	Qty.
1	53210	Screw SHCS M08-1.25 × 25 ZP	2
2	53055	WSHR M08 Spring Washer ZP	2
3	50001	WSHR M08 Standard Flat Washer ZP	4
4	48256	Breaker Box	1
5	50047	Nut NNYL M06-1.00 ZP	4
6	50000	WSHR M06 Standard Flat Washer ZP	8
7	48711	Bracket	1
8	53123	Screw SHCS M06-1.00 × 25 ZP	4
9	53046	WSHR M06 Spring Washer ZP	4
10	48712	Engine ECU	1
11	50048	Nut NNYL M08-1.25 ZP	2
12	50038	Screw HHCS M12-1.75 × 25 ZP	4
13	53148	WSHR M12 Spring Washer ZP	4
14	50003	WSHR M12 Standard Flat Washer ZP	4

Perkins Fuse Installation 2

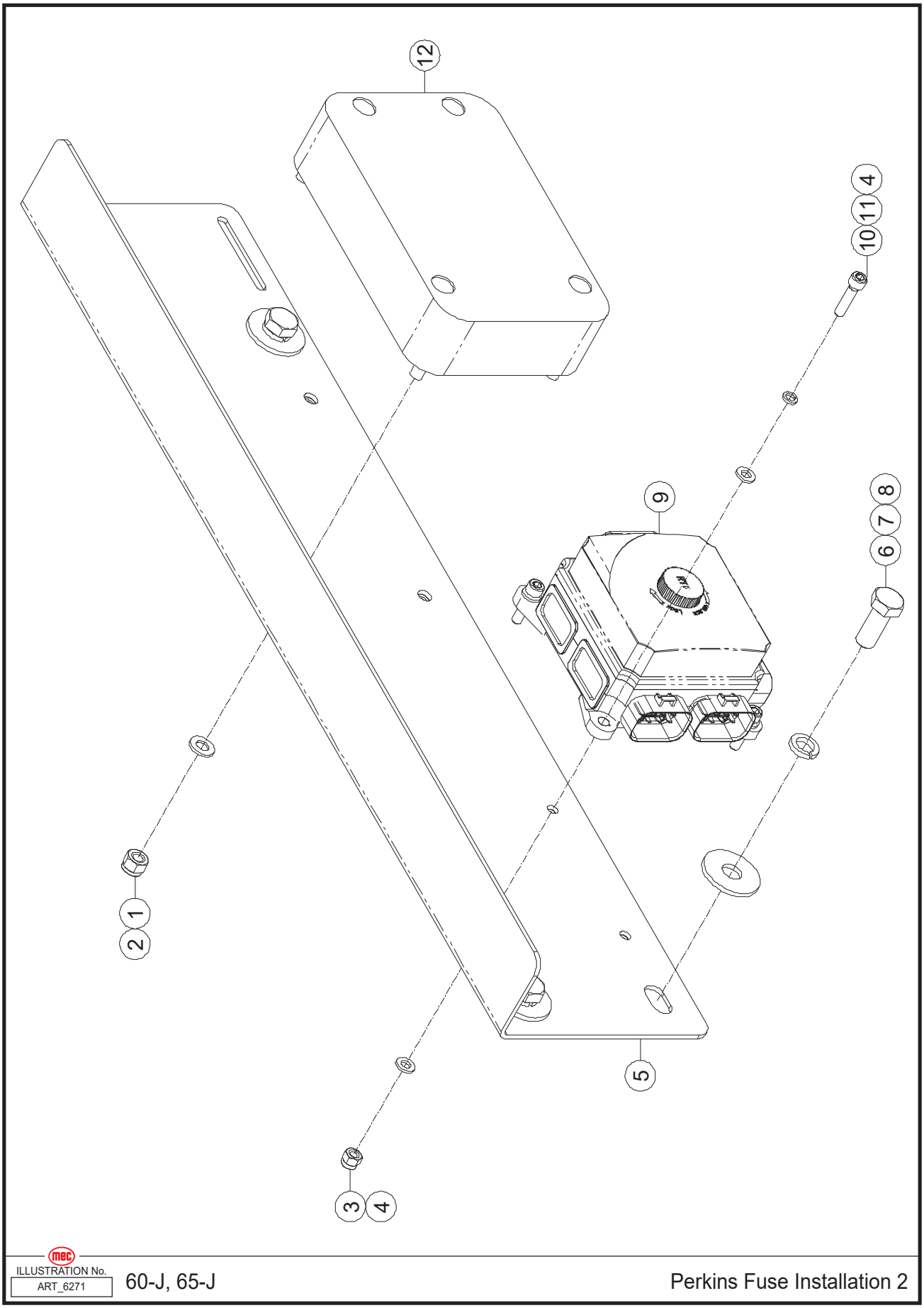

ILLUSTRATION No. ART_6271

60-J, 65-J

Perkins Fuse Installation 2

Item	Part Number	Description	Qty.
1	50048	Nut NNYL M08-1.25 ZP	4
2	50001	WSHR M08 Standard Flat Washer ZP	4
3	50047	Nut NNYL M06-1.00 ZP	4
4	50000	WSHR M06 Standard Flat Washer ZP	8
5	48694	Bracket	1
6	50039	Screw HHCS M12-1.75 × 30 ZP	4
7	53148	WSHR M12 Spring Washer ZP	4
8	53478	WSHR M12 Flat Fender Washer ZP	4
9	47701	Power Distribution Module (Refer to page 212)	1
10	53123	Screw SHCS M06-1.00 × 25 ZP	4
11	53046	WSHR M06 Spring Washer ZP	4
12	48693	Fuse Box	1
--	47700	Fuse Kit	1

Perkins Fuel Tank Installation

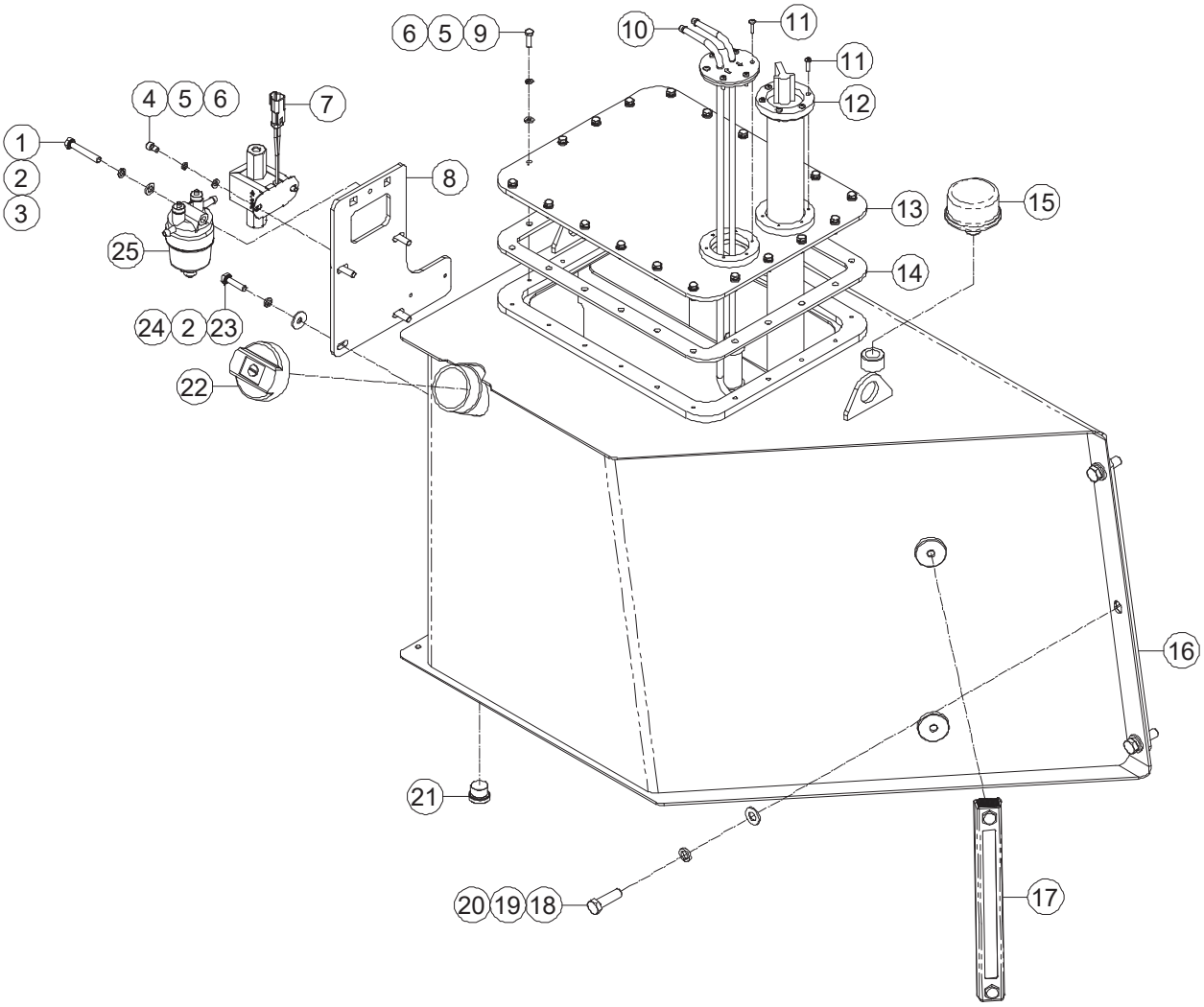

ILLUSTRATION No. ART_6272

60-J, 65-J

Perkins Fuel Tank Installation

Item	Part Number	Description	Qty.
1	50015	Screw HHCS M08-1.25 × 50 ZP	1
2	53055	WSHR M08 Spring Washer ZP	5
3	50001	WSHR M08 Standard Flat Washer ZP	1
4	53484	Screw SHCS M06-1.00 × 10 ZP	2
5	53046	WSHR M06 Spring Washer ZP	22
6	50000	WSHR M06 Standard Flat Washer ZP	22
7	48713	Fuel Pump	1
8	48696	Bracket	1
9	50028	Screw HHCS M06-1.00 × 20 ZP	20
10	48697	Suction Pipe	1
11	53520	Screw PHMS M04-0.70 × 16 ZP	12
12	47685	Fuel Level Sensor	1
13	47683	Cover	1
14	47684	Seal	1
15	47687	Filter	1
16	48698	Fuel Tank	1
17	47688	Fuel Level Indicator	1
18	53247	Screw HHCS M12-1.75 × 40 ZP	6
19	53148	WSHR M12 Spring Washer ZP	6
20	50003	WSHR M12 Standard Flat Washer ZP	6
21	47693	Tank Plug	1
22	47692	Fuel Tank Cap	1
23	50032	Screw HHCS M08-1.25 × 30 ZP	4
24	50218	WSHR M08 Flat Fender Washer ZP	4
25	48714	Fuel / Water Separator Filter	1

PVG Valve Block Installation

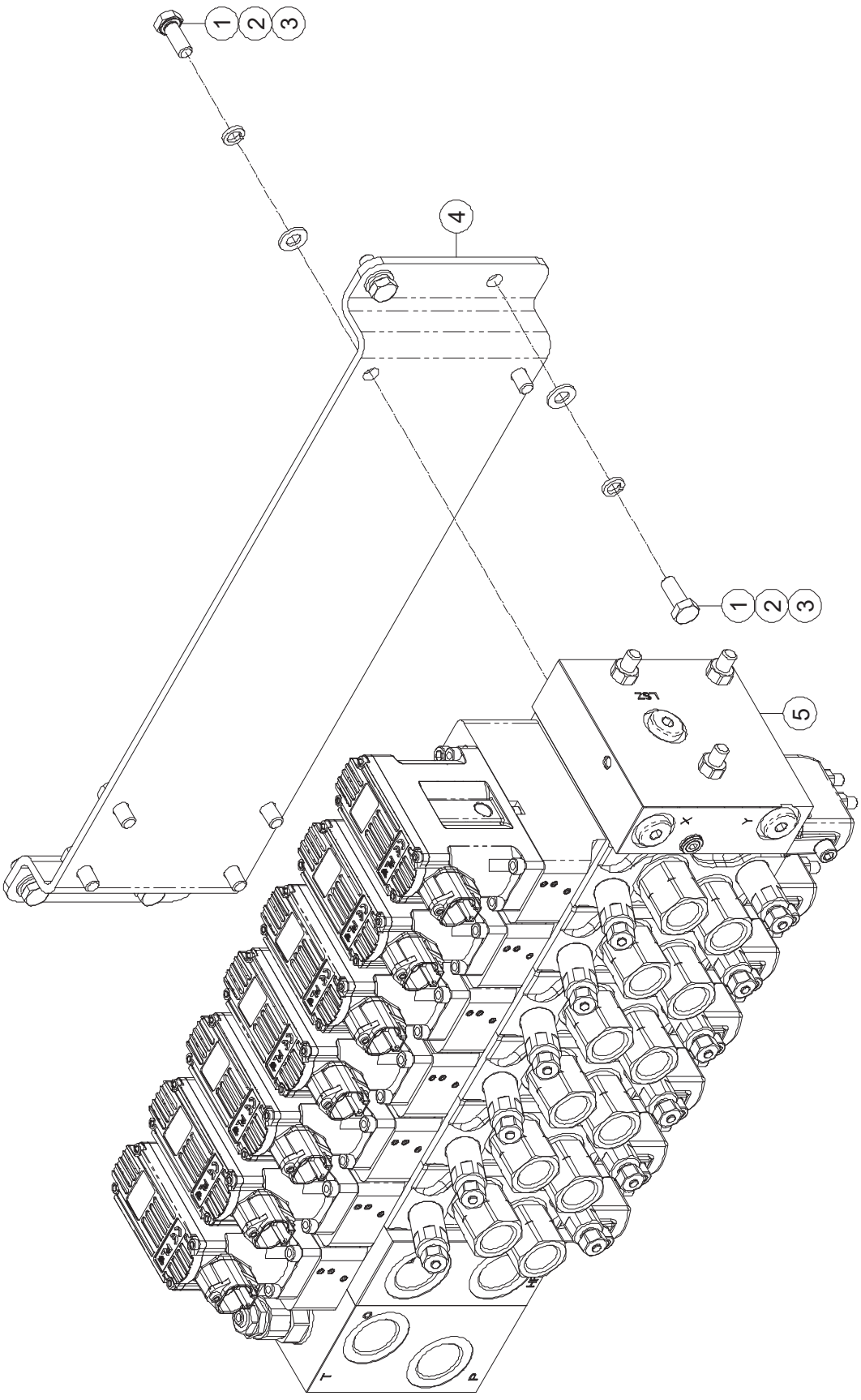

ILLUSTRATION No. ART_6273

60-J, 65-J

PVG Valve Block Installation

Item	Part Number	Description	Qty.
1	50030	Screw HHCS M08-1.25 × 20 ZP	10
2	53055	WSHR M08 Spring Washer ZP	10
3	50001	WSHR M08 Standard Flat Washer ZP	10
4	48715	Bracket	1
5	48716	PVG Valve Block Assembly (Refer to page 112)	1

PVG Valve Block Assembly

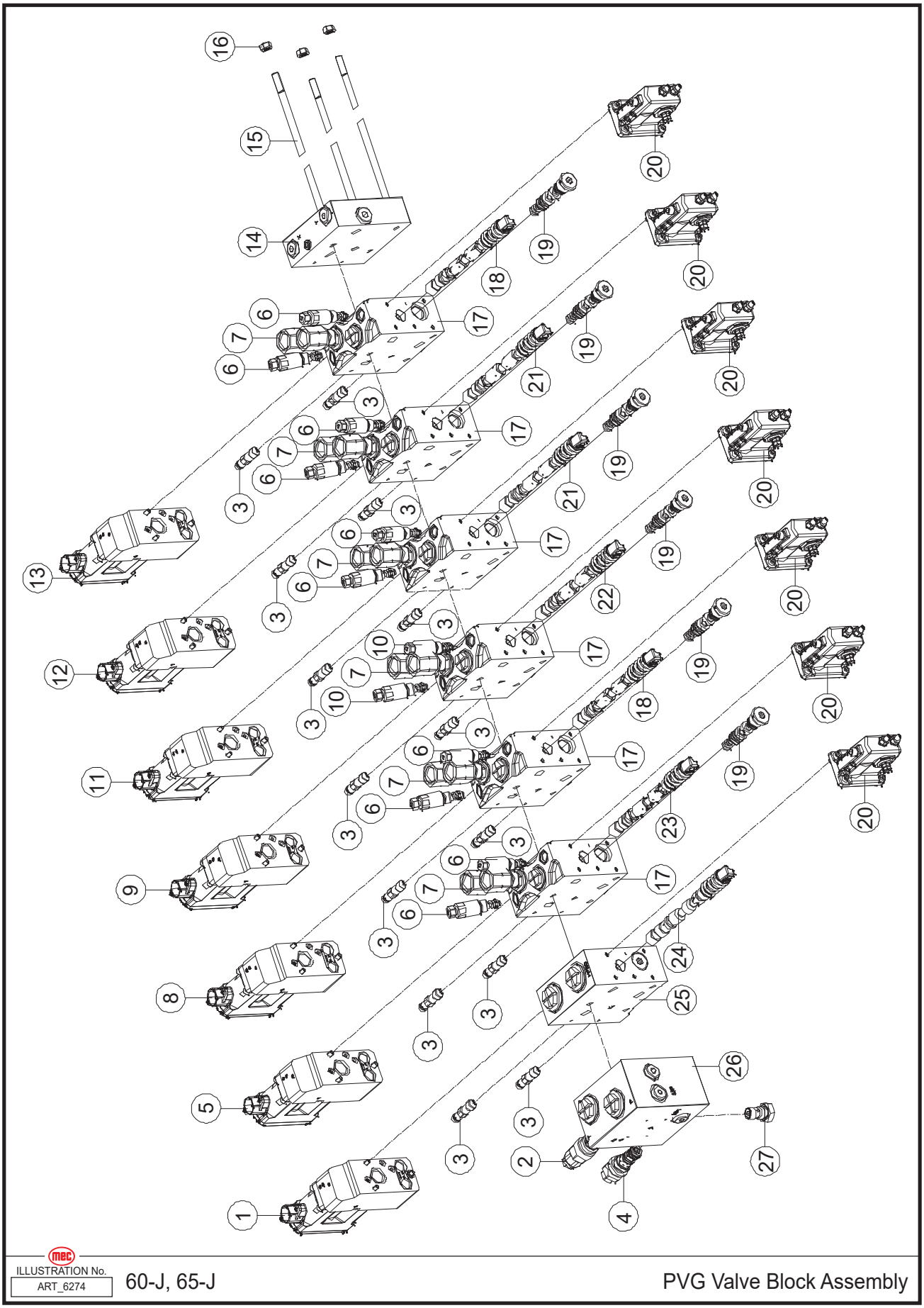

Item	Part Number	Description	Qty.
1	48717	Electric Control Unit	1
--	48718	Seal Kit	1
2	48719	Cartridge, Safe Valve	1
3	48720	Plug	14
4	48721	Cartridge, Relief Valve	1
5	48722	Electric Control Unit	1
--	48718	Seal Kit	1
6	48723	Cartridge, Relief Valve	10
7	48724	Fittings	12
8	48725	Electric Control Unit	1
--	48718	Seal Kit	1
9	48726	Electric Control Unit	1
--	48718	Seal Kit	1
10	48727	Cartridge, Relief Valve	2
11	48728	Electric Control Unit	1
--	48718	Seal Kit	1
12	48729	Electric Control Unit	1
--	48718	Seal Kit	1
13	48730	Electric Control Unit	1
--	48718	Seal Kit	1
14	48731	Cover	1
--	48732	Seal Kit	1
15	48733	Bolt	3
16	48734	Nut	3
17	48735	Work Unit	6
--	48736	Seal Kit	6
18	48737	Directional Cartridge	2
19	48738	Cartridge, Pressure-Compensated	6
20	48739	Manual Unit	7
--	48740	Seal Kit	7
21	48741	Directional Cartridge	2
22	48742	Directional Cartridge	1
23	48743	Directional Cartridge	1
24	48744	Directional Cartridge	1
25	48745	Work Unit	1
--	48746	Seal Kit	1
26	48747	Inlet Unit	1
--	48748	Seal Kit	1
27	48749	Filter assembly	1

Hydraulic Generator Assembly

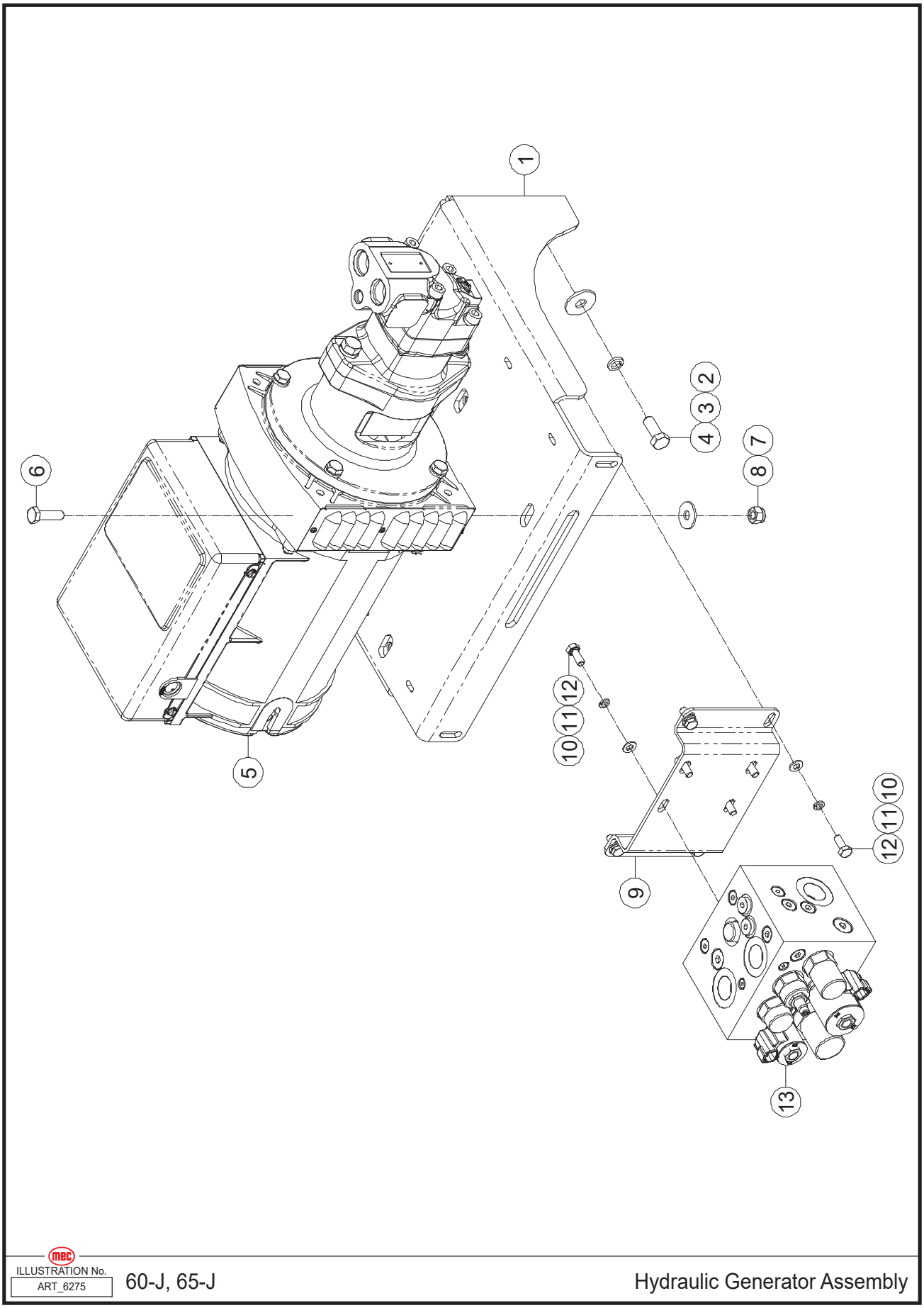

ILLUSTRATION No. ART_6275 60-J, 65-J Hydraulic Generator Assembly

Item	Part Number	Description	Qty.
1	48750	Bracket	1
2	53478	WSHR M12 Flat Fender Washer ZP	6
3	53148	WSHR M12 Spring Washer ZP	6
4	50039	Screw HHCS M12-1.75 × 30 ZP	6
5	47729	Hydraulic Generator	1
6	50332	Screw HHCS M10-1.50 × 35 ZP	3
7	53375	WSHR M10 Flat Fender Washer ZP	3
8	50049	Nut NNYL M10-1.50 ZP	3
9	47733	Bracket	1
10	50001	WSHR M08 Standard Flat Washer ZP	8
11	53055	WSHR M08 Spring Washer ZP	8
12	50030	Screw HHCS M08-1.25 × 20 ZP	8
13	47734	Hydraulic Generator Manifold Assembly (Refer to page 116)	1

Hydraulic Generator Manifold Assembly

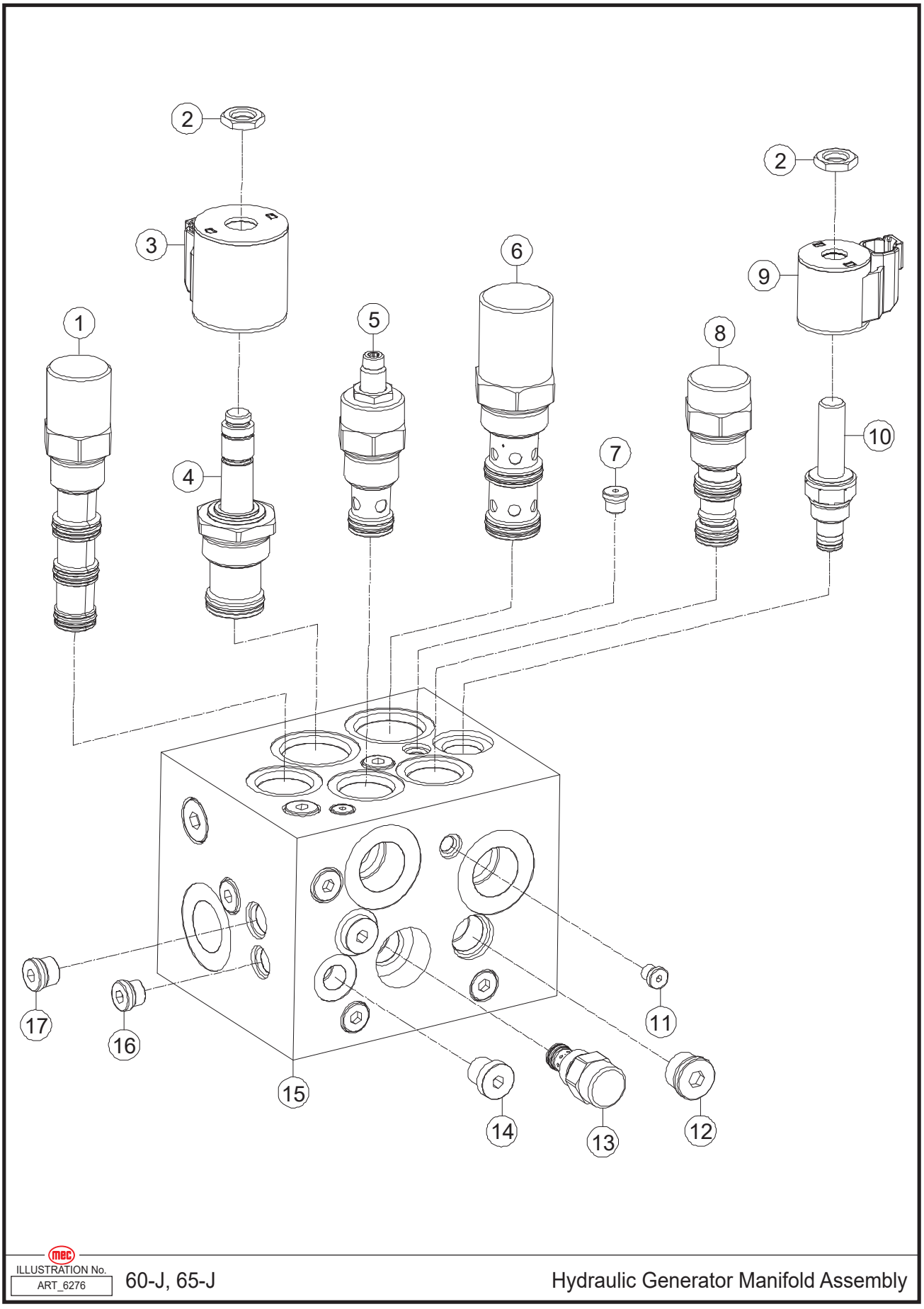

ILLUSTRATION No. ART_6276 60-J, 65-J Hydraulic Generator Manifold Assembly

Item	Part Number	Description	Qty.
1	47735	Cartridge, Flow Control Valve	1
2	42795	Nut	2
3	47736	Coil	1
4	47737	Cartridge, Proportional Solenoid Valve	1
5	47738	Cartridge, Flow Control Valve	1
6	47739	Cartridge, Flow Control Valve	1
7	43643	Plug	1
8	47740	Cartridge, Logic Valve	1
9	47741	Coil	1
10	43372	Cartridge, Solenoid Valve	1
11	43465	Plug	5
12	43417	Plug	4
13	47742	Cartridge, Flow Control Valve	1
14	46869	Plug	2
15	47743	Body	1
16	42802	Plug	5
17	43434	Plug	4

Hydraulic Support Installation 1

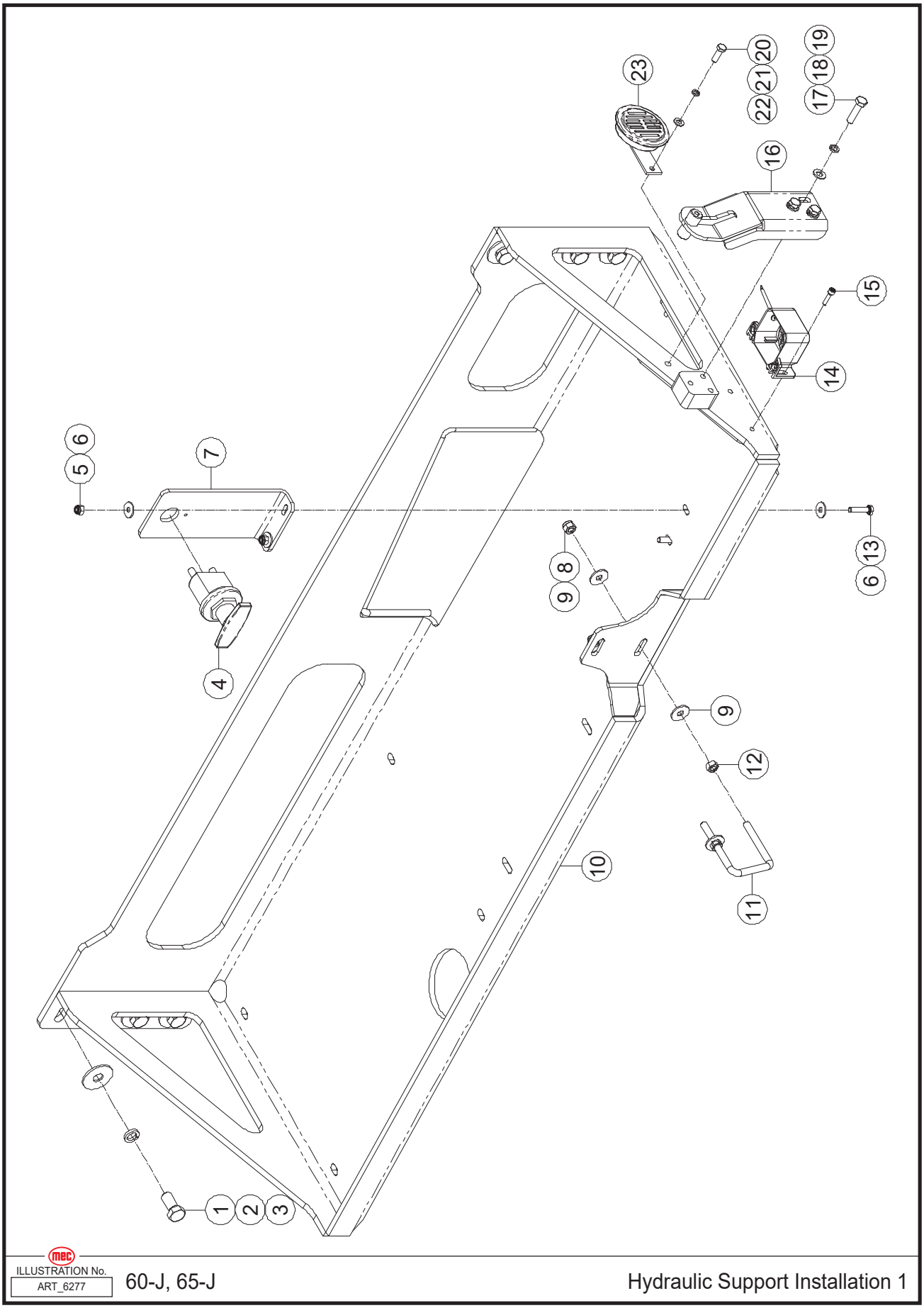

ILLUSTRATION No. ART_6277

60-J, 65-J

Hydraulic Support Installation 1

Item	Part Number	Description	Qty.
1	50374	Screw HHCS M16-2.00 × 35 ZP	8
2	53149	WSHR M16 Spring Washer ZP	8
3	53314	WSHR M16 Flat Fender Washer ZP	8
4	47758	Power Switch	1
5	50048	Nut NNYL M08-1.25 ZP	2
6	50218	WSHR M08 Flat Fender Washer ZP	4
7	48751	Bracket	1
8	50049	Nut NNYL M10-1.50 ZP	2
9	53375	WSHR M10 Flat Fender Washer ZP	4
10	48752	Support	1
11	48666	U-Bolt	1
12	53373	Nut NHEX M10-1.50 ZP	2
13	50282	Screw HHCS M08-1.25 × 35 ZP	2
14	47752	Alarm	1
15	53123	Screw SHCS M06-1.00 × 25 ZP	2
16	48753	Bracket	1
17	50237	Screw HHCS M10-1.50 × 40 ZP	3
18	53054	WSHR M10 Spring Washer ZP	3
19	50002	WSHR M10 Standard Flat Washer ZP	3
20	50031	Screw HHCS M08-1.25 × 25 ZP	1
21	53055	WSHR M08 Spring Washer ZP	1
22	50001	WSHR M08 Standard Flat Washer ZP	1
23	43243	Horn	1

Hydraulic Support Installation 2

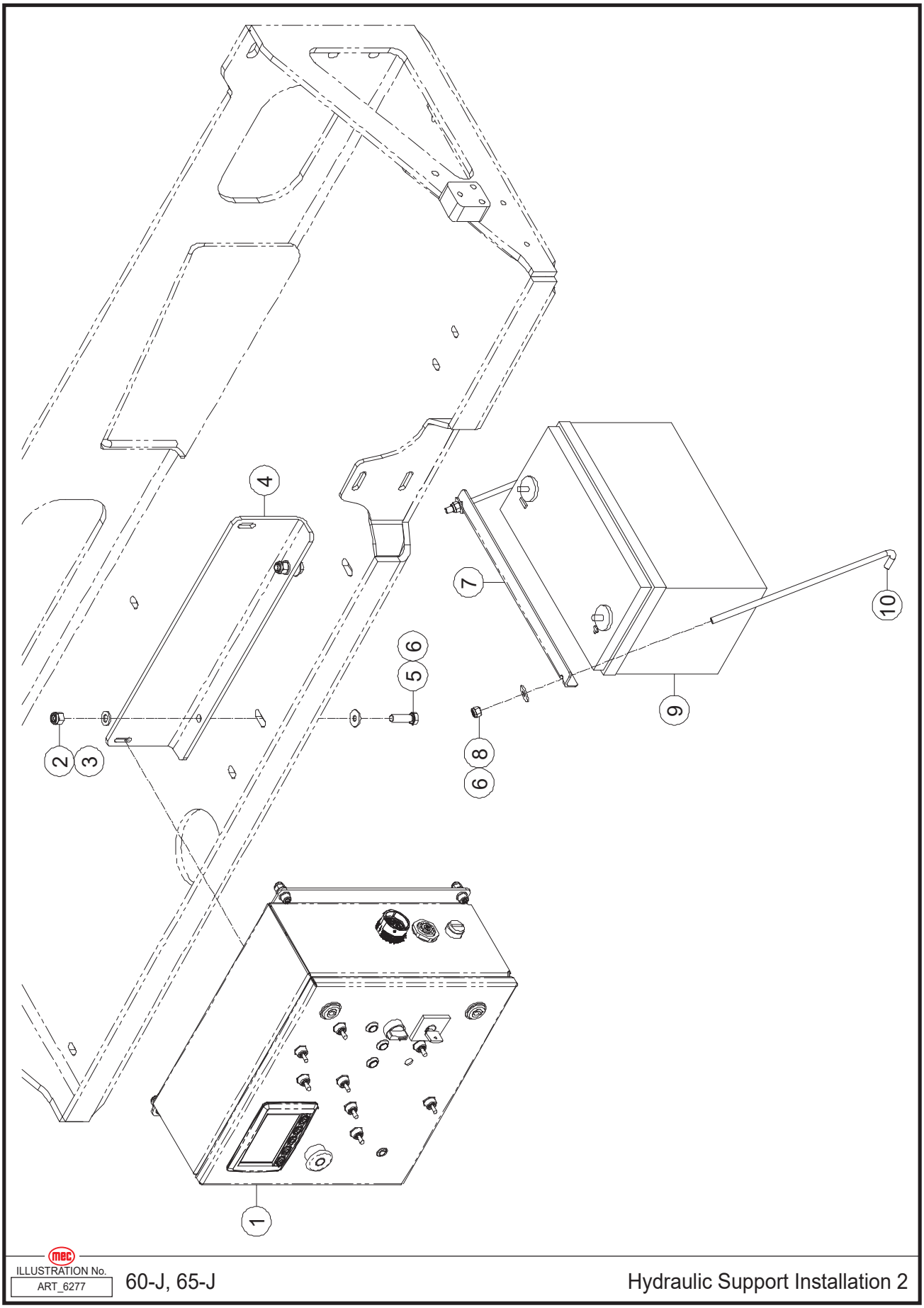

ILLUSTRATION No. ART_6277

60-J, 65-J

Hydraulic Support Installation 2

Item	Part Number	Description	Qty.
1	REF	Ground Control Box Assembly (Refer to page 214)	1
2	50049	Nut NNYL M10-1.50 ZP	2
3	50002	WSHR M10 Standard Flat Washer ZP	2
4	47746	Bracket	1
5	50332	Screw HHCS M10-1.50 × 35 ZP	2
6	50218	WSHR M08 Flat Fender Washer ZP	4
7	47747	Retainer	1
8	50048	Nut NNYL M08-1.25 ZP	2
9	43144	Battery	1
10	48754	Hook, Battery Hold Down	2

REF - Reference

Hydraulic Tank Installation

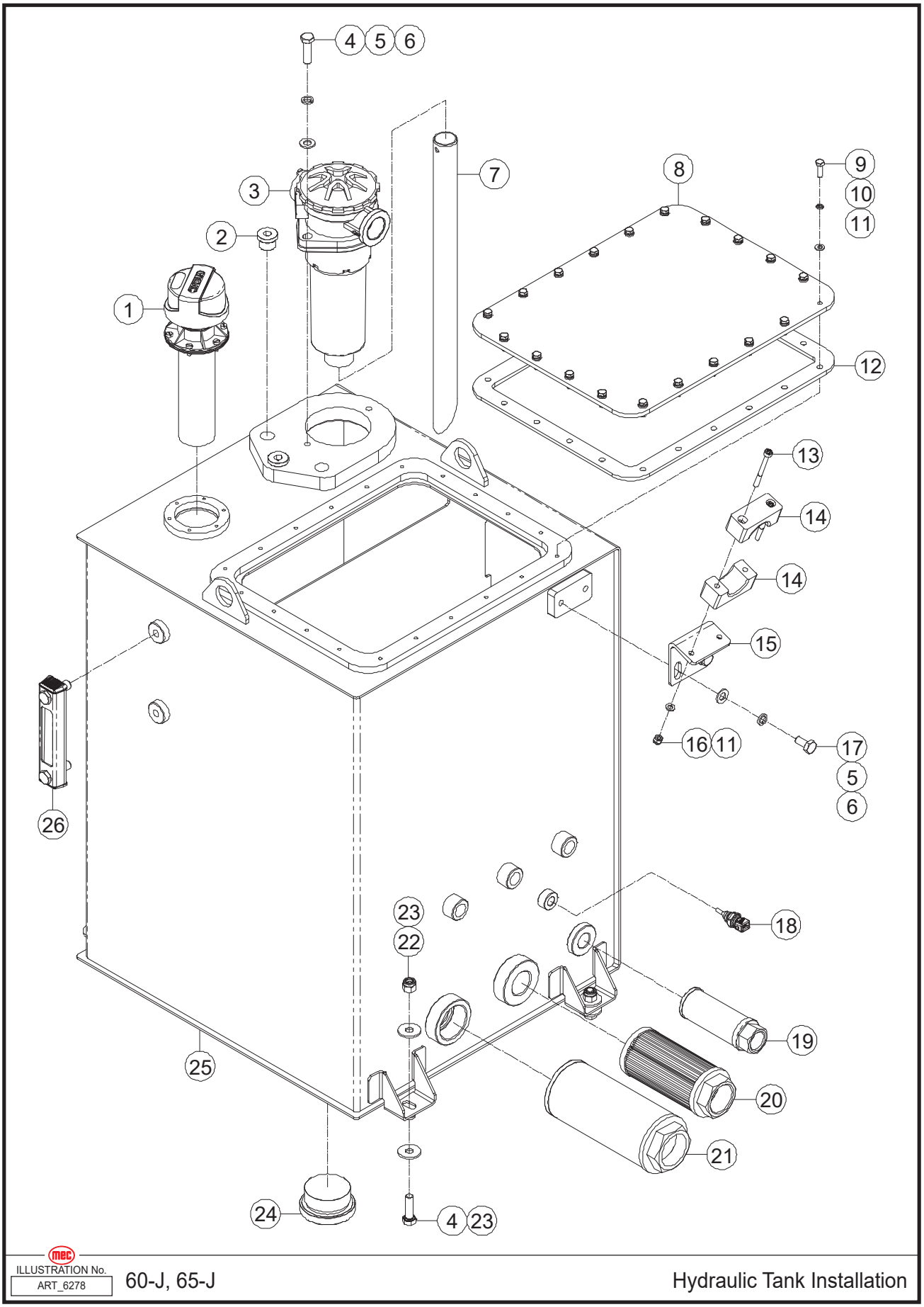

ILLUSTRATION No. ART_6278 60-J, 65-J Hydraulic Tank Installation

Item	Part Number	Description	Qty.
1	47764	Vent Plug	1
2	47693	Tank Plug	2
3	47762	Hydraulic Oil Return Filter	1
--	48180	Hydraulic Oil Return Filter Element	1
4	50332	Screw HHCS M10-1.50 × 35 ZP	6
5	53054	WSHR M10 Spring Washer ZP	8
6	50002	WSHR M10 Standard Flat Washer ZP	4
7	47763	Pipe	1
8	48755	Cover	1
9	50028	Screw HHCS M06-1.00 × 20 ZP	20
10	53046	WSHR M06 Spring Washer ZP	20
11	50000	WSHR M06 Standard Flat Washer ZP	22
12	47684	Seal	1
13	53142	Screw SHCS M06-1.00 × 65 ZP	2
14	47774	Clamp	2
15	47773	Bracket	1
16	50047	Nut NNYL M06-1.00 ZP	2
17	50215	Screw HHCS M10-1.50 × 20 ZP	2
18	47772	Temperature Sensor	1
19	47768	Filter Cartridge	1
20	43123	Filter Cartridge	1
21	47767	Filter Cartridge	1
22	50049	Nut NNYL M10-1.50 ZP	4
23	53375	WSHR M10 Flat Fender Washer ZP	8
24	47766	Plug	1
25	48756	Hydraulic Tank	1
26	47765	Hydraulic Level Indicator	1

Turntable Accessories Installations 1

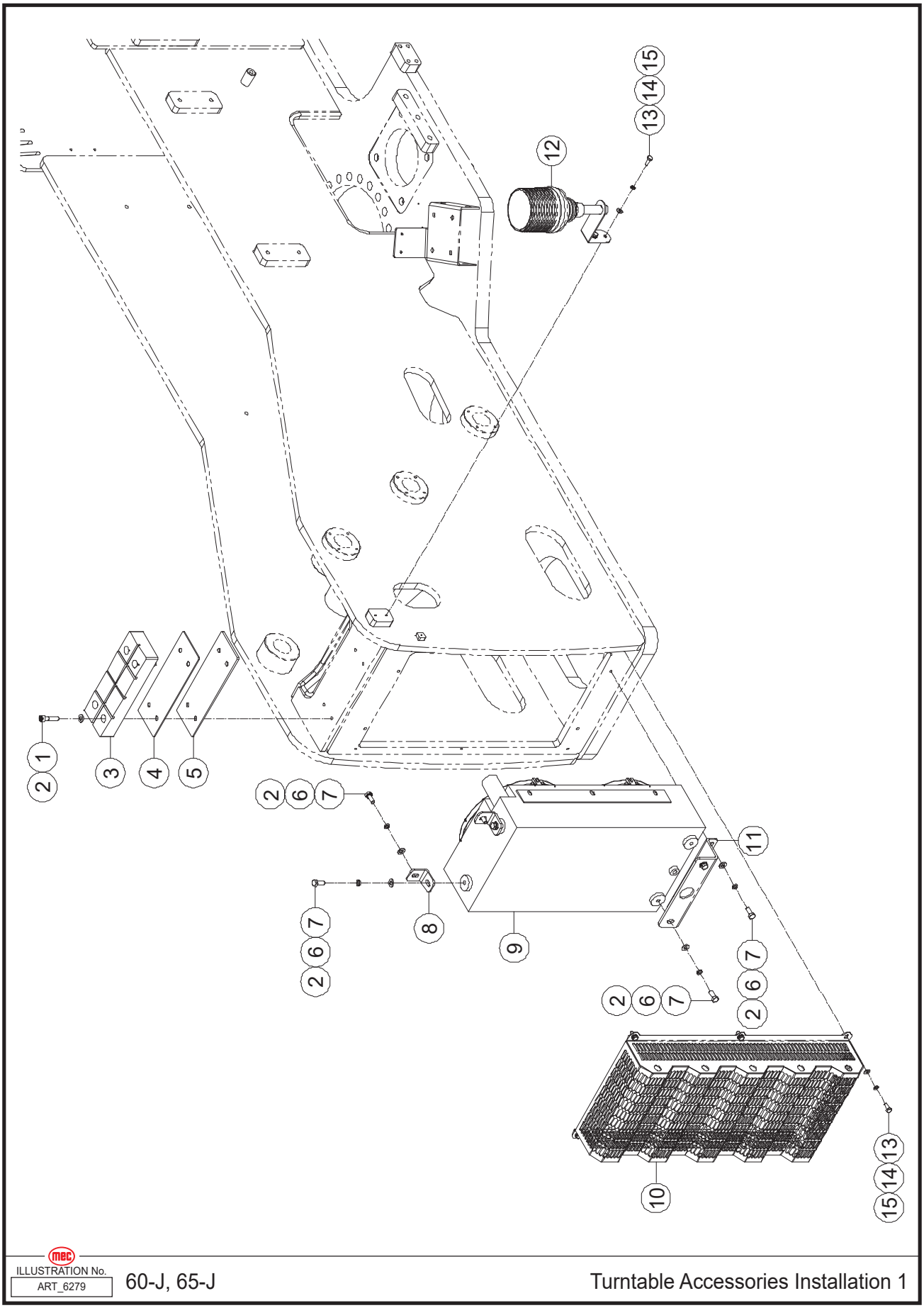

ILLUSTRATION No. ART_6279

60-J, 65-J

Turntable Accessories Installation 1

Item	Part Number	Description	Qty.
1	50515	Screw SHCS M10-1.50 × 45 ZP	4
2	50002	WSHR M10 Standard Flat Washer ZP	12
3	47775	Boom Pad	1
4	47865	Shim	1
5	47866	Shim	1
6	53054	WSHR M10 Spring Washer ZP	8
7	50033	Screw HHCS M10-1.50 × 25 ZP	8
8	47873	Plate	2
9	47872	Radiator	1
10	48758	Housing	1
11	48759	Bracket	1
12	47867	Beacon	1
13	50030	Screw HHCS M08-1.25 × 20 ZP	8
14	53055	WSHR M08 Spring Washer ZP	8
15	50001	WSHR M08 Standard Flat Washer ZP	8

Turntable Accessories Installations 2

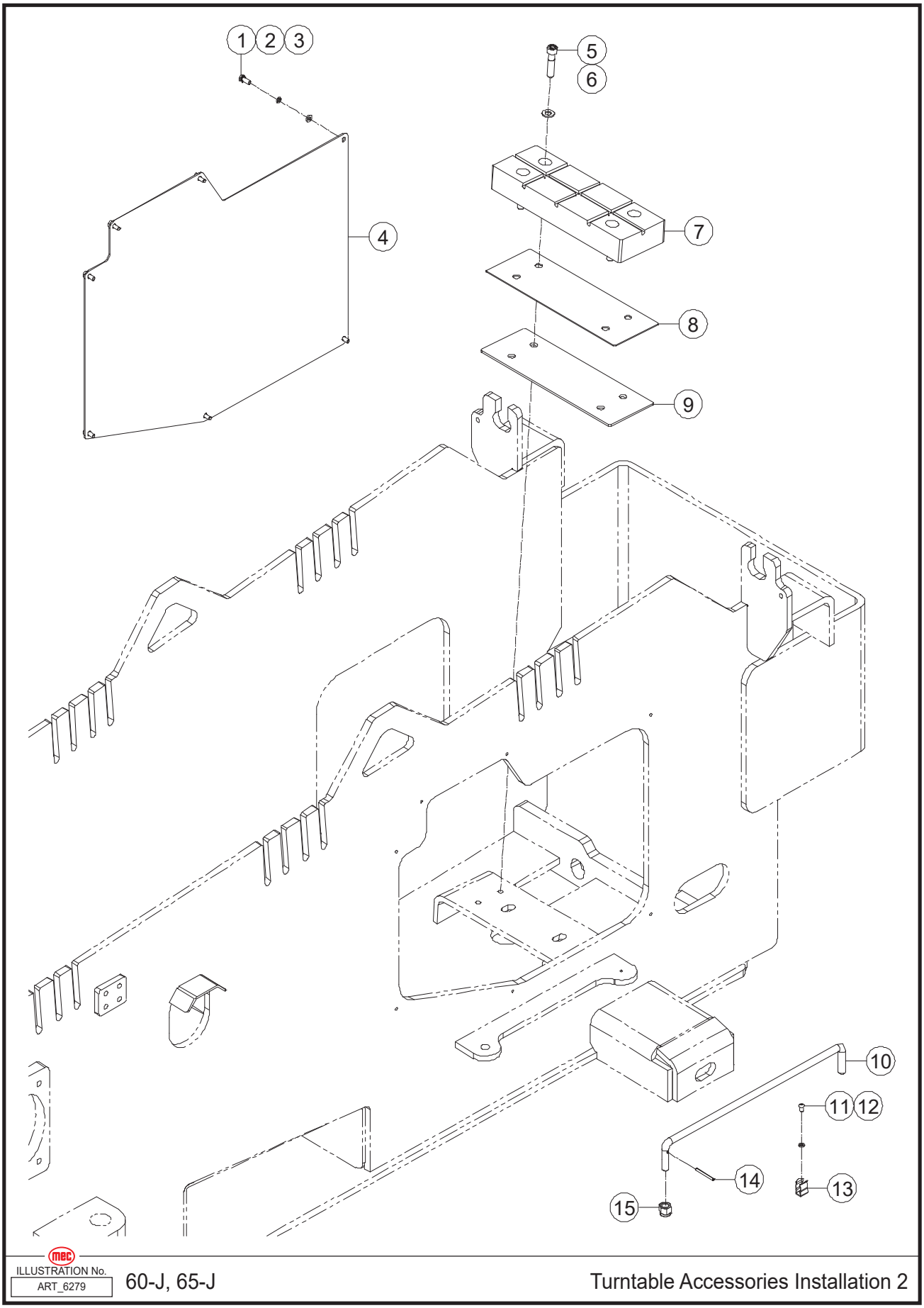

ILLUSTRATION No. ART_6279

60-J, 65-J

Turntable Accessories Installation 2

Item	Part Number	Description	Qty.
1	50445	Screw HHCS M06-1.00 × 16 ZP	7
2	53046	WSHR M06 Spring Washer ZP	7
3	50000	WSHR M06 Standard Flat Washer ZP	7
4	48761	Cover	1
5	50515	Screw SHCS M10-1.50 × 45 ZP	4
6	50002	WSHR M10 Standard Flat Washer ZP	4
7	47775	Boom Pad	1
8	47865	Shim	1
9	47866	Shim	1
10	48762	Stay Bar	1
11	53175	Screw BHCS M05-0.80 × 10 ZP	1
12	53038	WSHR M05 Standard Flat Washer ZP	1
13	48763	Clamp	1
14	48764	Pin	1
15	50050	Nut NNYL M12-1.75 ZP	1

Counterweight Installation

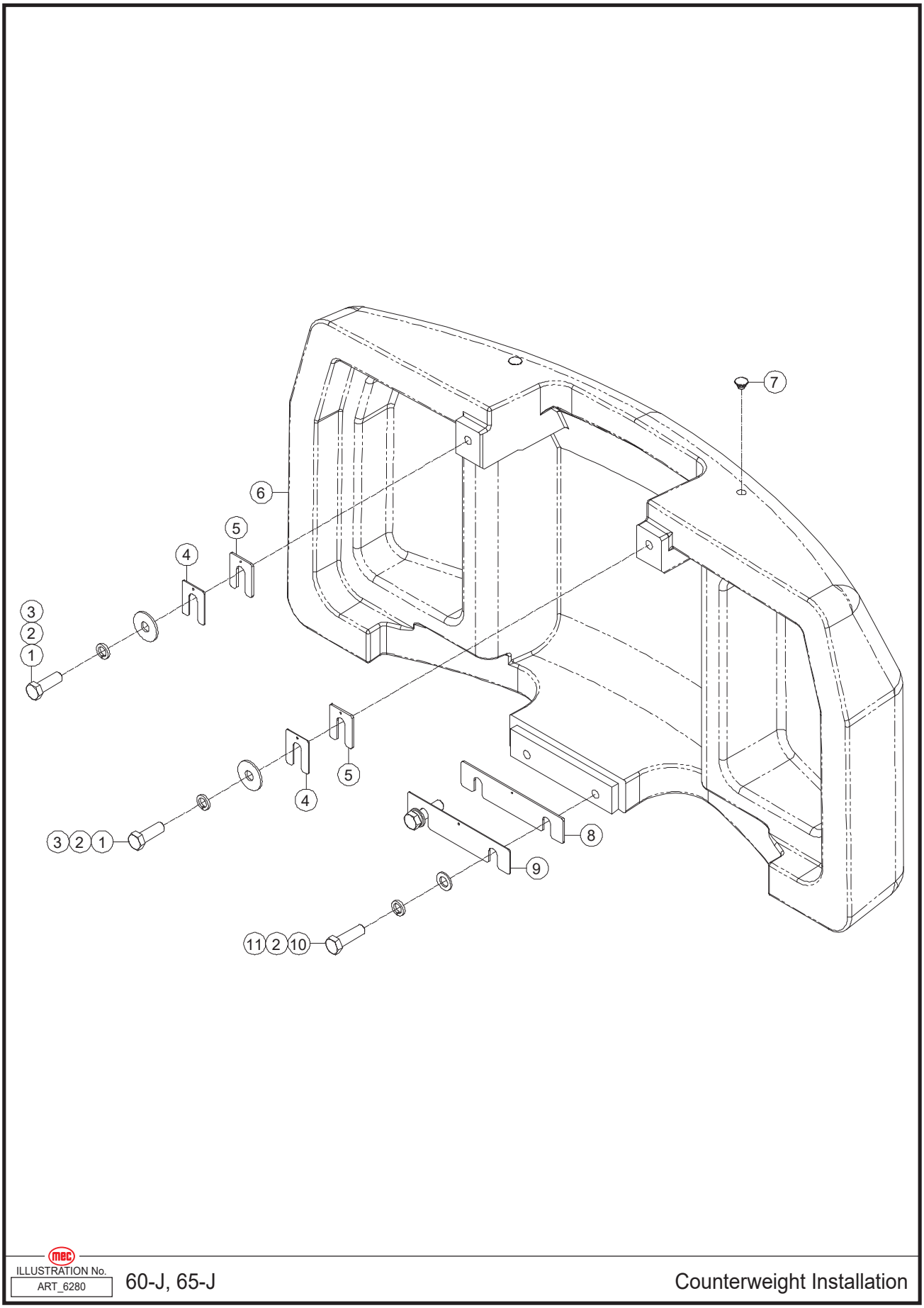

ILLUSTRATION No. ART_6280 60-J, 65-J Counterweight Installation

Item	Part Number	Description	Qty.
1	50464	Screw HHCS M24-3.00 × 70 ZP	2
2	53601	WSHR M24 Spring Washer ZP	4
3	53158	WSHR M24 Flat Fender Washer ZP	2
4	48765	Shim	2
5	48766	Shim	2
6	48768	Counterweight	1
7	48769	Plug	2
8	48770	Shim	1
9	48771	Shim	1
10	50465	Screw HHCS M24-3.00 × 80 ZP	2
11	53158	WSHR M24 Standard Flat Washer ZP	2

Turntable Hood Installations

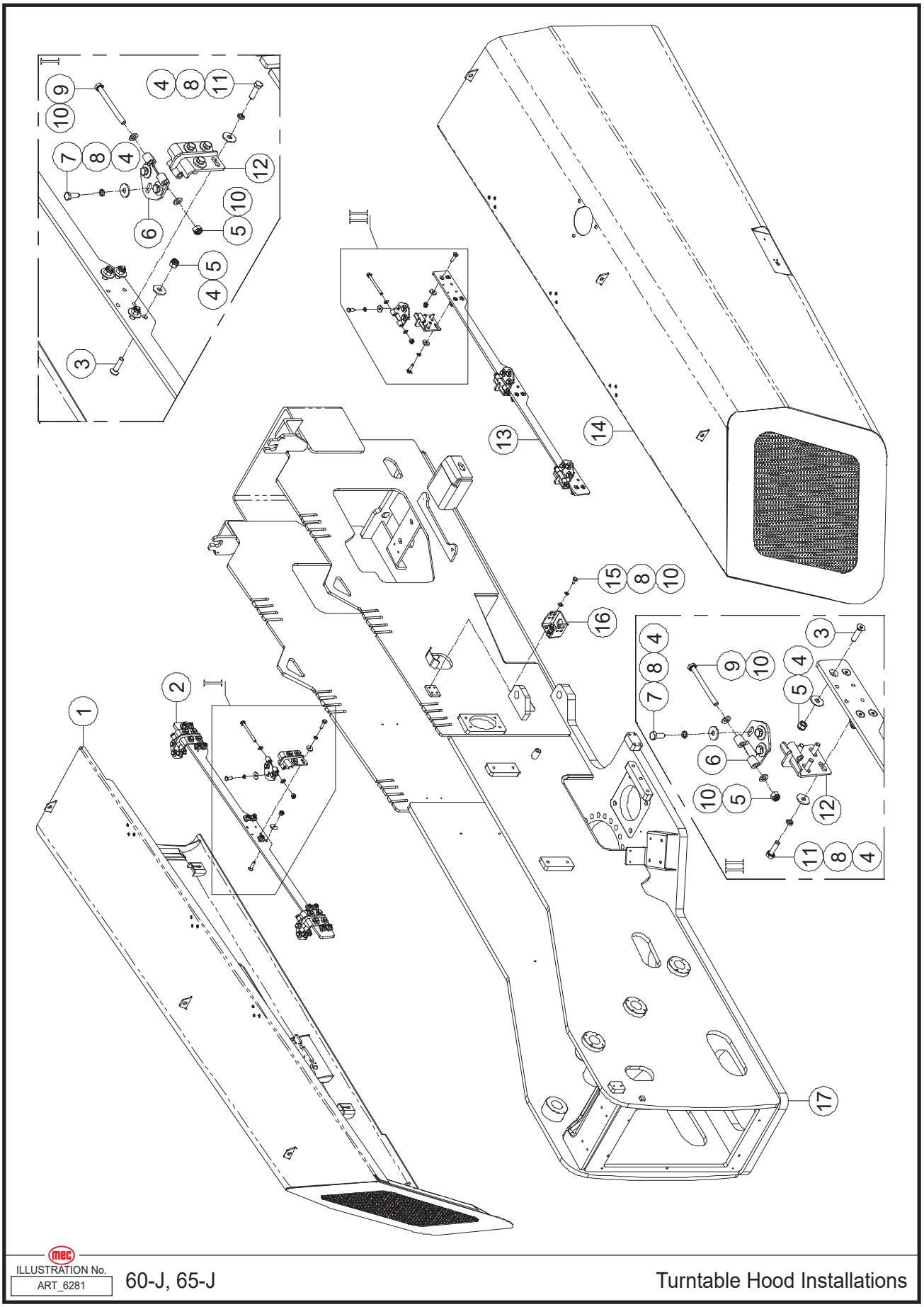

Item	Part Number	Description	Qty.
1	48772	Control Turntable Hood (Left Side)	1
2	48773	Plate	1
3	53230	Screw CSCS M10-1.50 × 40 ZP	24
4	53375	WSHR M10 Flat Fender Washer ZP	66
5	50049	Nut NNYL M10-1.50 ZP	30
6	48774	Hinge	6
7	50033	Screw HHCS M10-1.50 × 25 ZP	18
8	53054	WSHR M10 Spring Washer ZP	46
9	50257	Screw HHCS M10-1.50 × 110 ZP	6
10	50002	WSHR M10 Standard Flat Washer ZP	16
11	50332	Screw HHCS M10-1.50 × 35 ZP	24
12	48775	Hinge	6
13	48776	Plate	1
14	48777	Engine Turntable Hood (Right Side)	1
15	50215	Screw HHCS M10-1.50 × 20 ZP	4
16	48778	Bracket	1
17	48779	Turntable	1

Turntable Control Hood Accessories

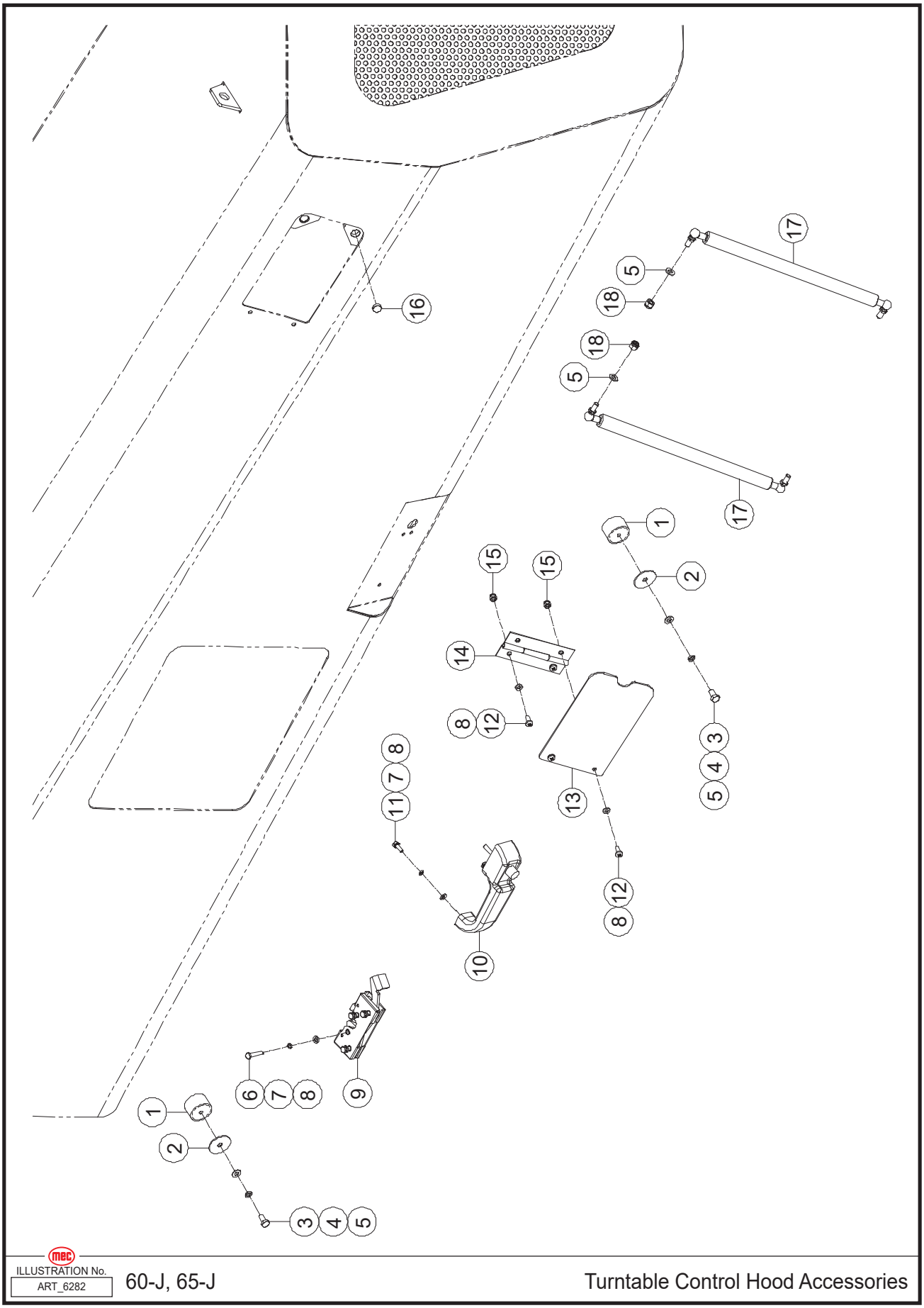

ILLUSTRATION No. ART_6282 60-J, 65-J Turntable Control Hood Accessories

Item	Part Number	Description	Qty.
1	47614	Rubber Mounting	2
2	48189	Shim	2
3	53154	Screw HHCS M08-1.25 × 16 ZP	2
4	53055	WSHR M08 Spring Washer ZP	2
5	50001	WSHR M08 Standard Flat Washer ZP	4
6	50214	Screw HHCS M06-1.00 × 30 ZP	4
7	53046	WSHR M06 Spring Washer ZP	7
8	50000	WSHR M06 Standard Flat Washer ZP	11
9	41067	Lock	1
10	42353	Doorknob	1
11	50445	Screw HHCS M06-1.00 × 16 ZP	3
12	53231	Screw PHMS M06-1.00 × 16 ZP	4
13	47901	Door	1
14	47899	Hinge	1
15	50047	Nut NNYL M06-1.00 ZP	4
16	43053	Magnet	2
17	48780	Control Turntable Hood Gas Spring	2
18	50048	Nut NNYL M08-1.25 ZP	2

Turntable Engine Hood Accessories

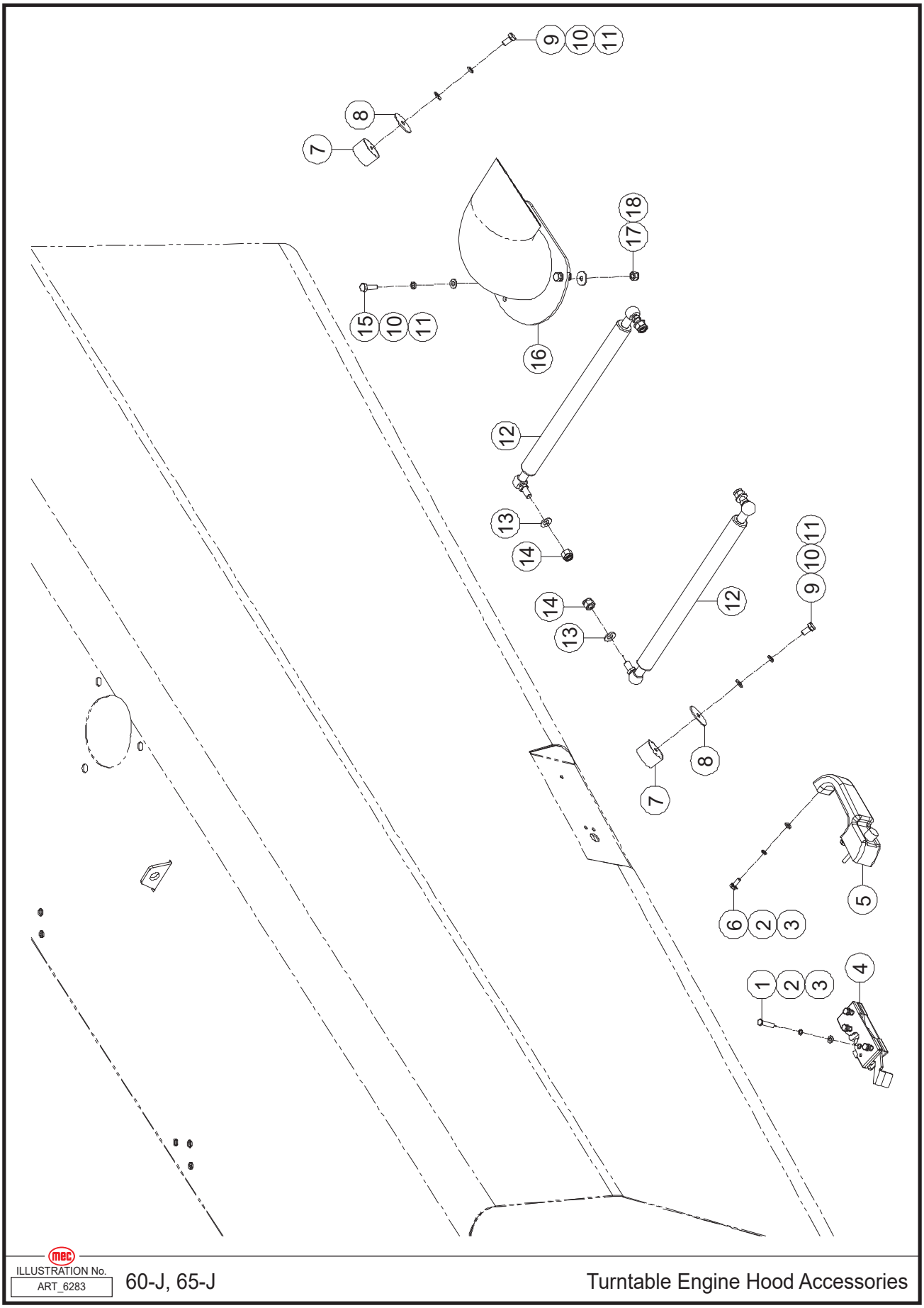

ILLUSTRATION No. ART_6283 60-J, 65-J Turntable Engine Hood Accessories

Item	Part Number	Description	Qty.
1	50214	Screw HHCS M06-1.00 × 30 ZP	4
2	53046	WSHR M06 Spring Washer ZP	7
3	50000	WSHR M06 Standard Flat Washer ZP	7
4	42896	Lock	1
5	42353	Doorknob	1
6	50445	Screw HHCS M06-1.00 × 16 ZP	3
7	47614	Rubber Mounting	2
8	48189	Shim	2
9	53154	Screw HHCS M08-1.25 × 16 ZP	2
10	53055	WSHR M08 Spring Washer ZP	5
11	50001	WSHR M08 Standard Flat Washer ZP	5
12	48781	Engine Turntable Hood Gas Spring	2
13	50002	WSHR M10 Standard Flat Washer ZP	4
14	50049	Nut NNYL M10-1.50 ZP	4
15	50031	Screw HHCS M08-1.25 × 25 ZP	3
16	47895	Exhaust Tube	1
17	50048	Nut NNYL M08-1.25 ZP	3
18	50218	WSHR M08 Flat Fender Washer ZP	3

Slewing Ring Gear Lubrication System

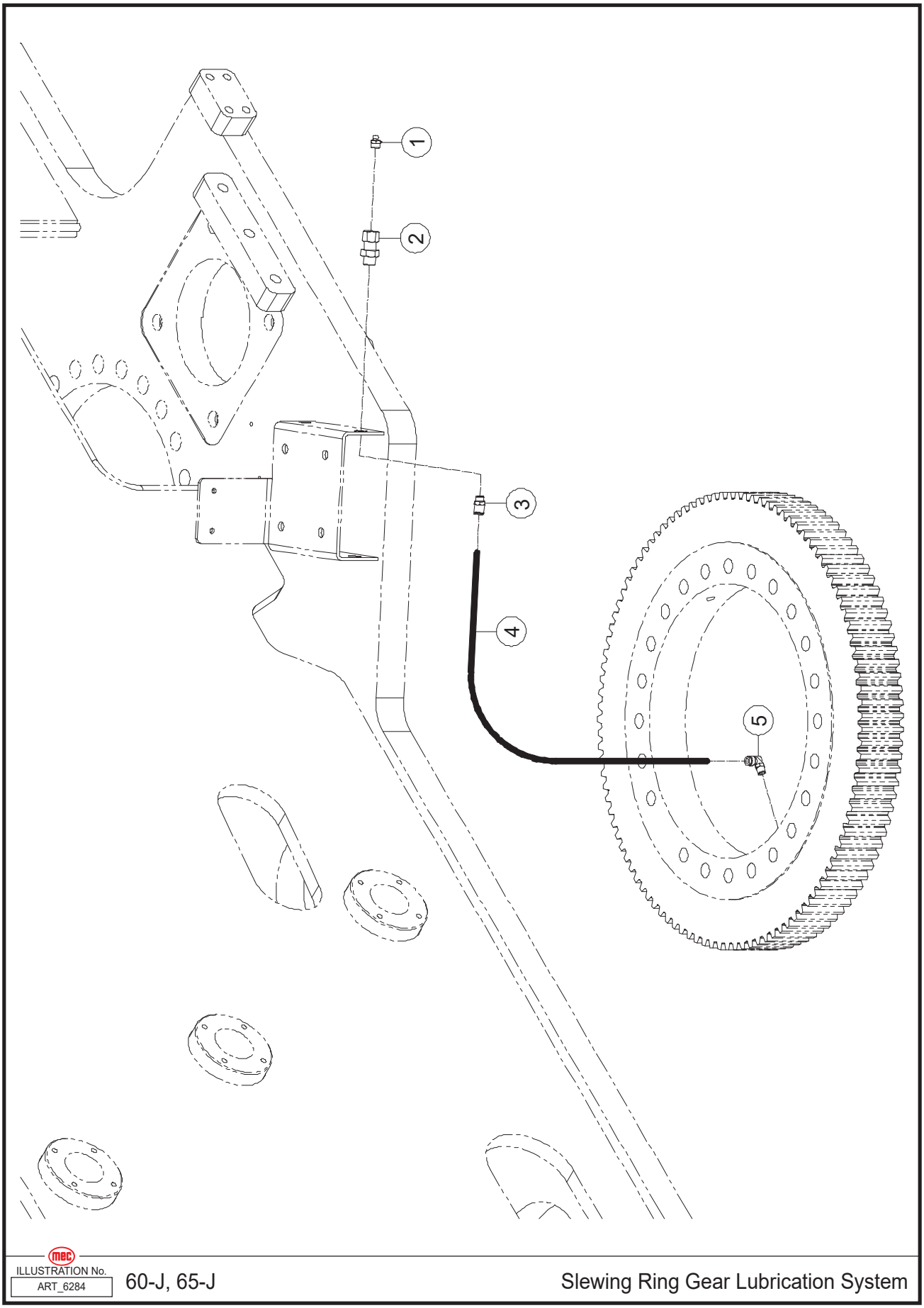

ILLUSTRATION No. ART_6284

60-J, 65-J

Slewing Ring Gear Lubrication System

Item	Part Number	Description	Qty.
1	48828	Grease Nipple	1
2	48829	Fitting	1
3	48830	Fitting	1
4	48831	Hose	1
5	48832	Fitting	1

Linkage Installation 1

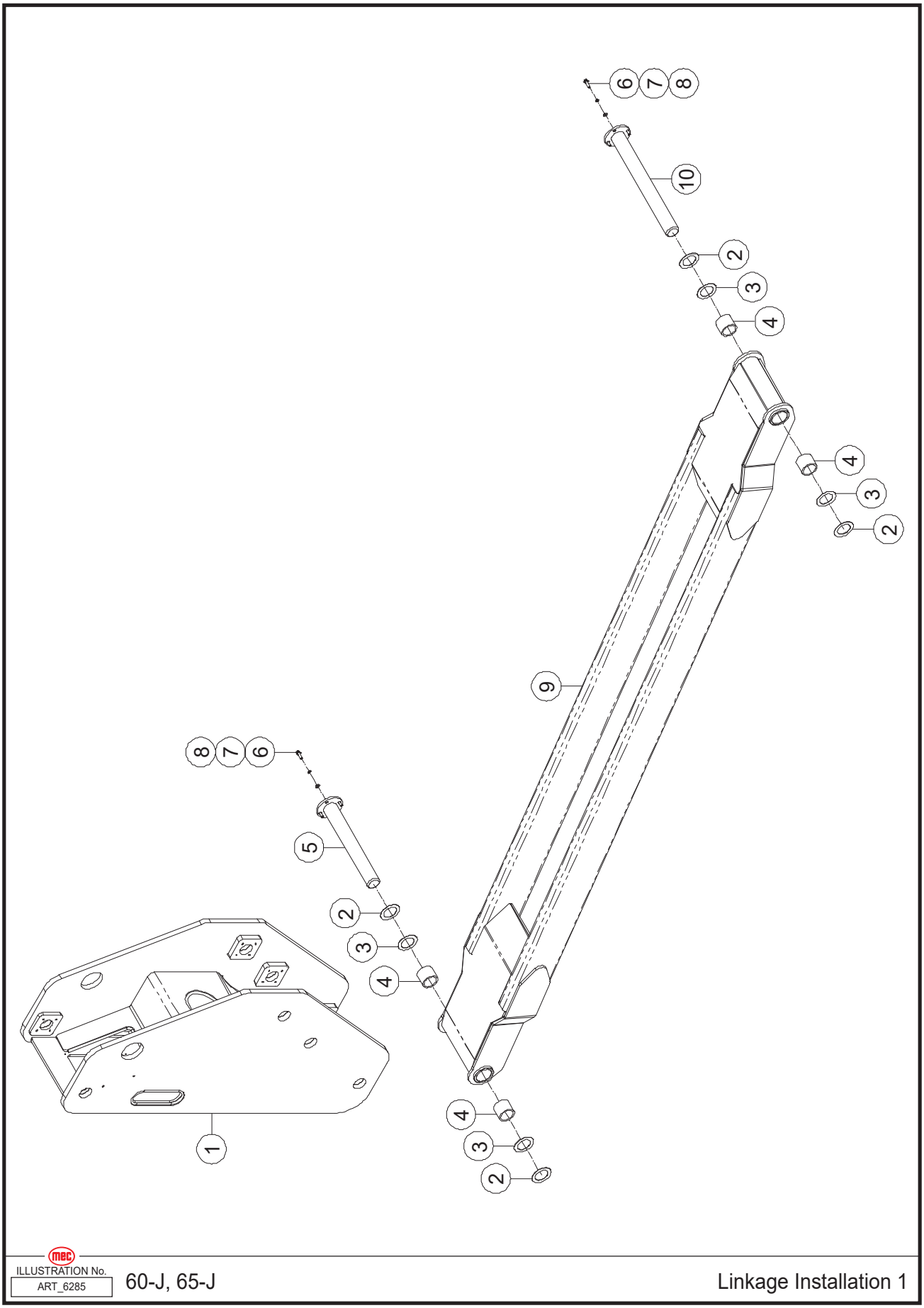

ILLUSTRATION No. ART_6285

60-J, 65-J

Linkage Installation 1

Item	Part Number	Description	Qty.
1	48833	Linkage	1
2	48834	Shim	4
3	48835	Shim	4
4	42091	Sleeve Bearing	4
5	48836	Pin, Pivot	1
6	50032	Screw HHCS M08-1.25 × 30 ZP	8
7	53055	WSHR M08 Spring Washer ZP	8
8	50001	WSHR M08 Standard Flat Washer ZP	8
9	48837	Linkage	1
10	48838	Pin, Pivot	1

Linkage Accessory Installation 1

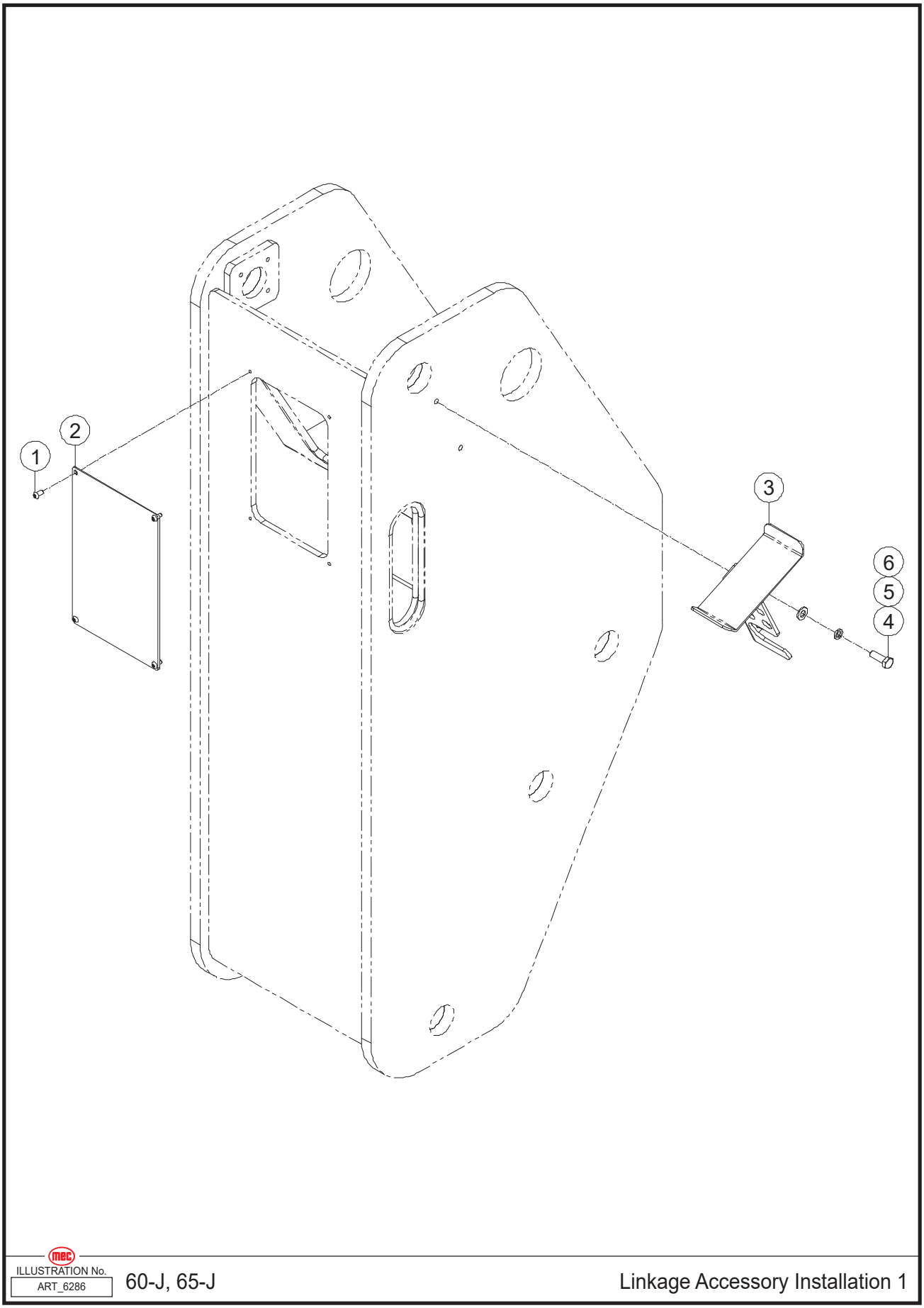

ILLUSTRATION No. ART_6286 60-J, 65-J Linkage Accessory Installation 1

Item	Part Number	Description	Qty.
1	53026	Screw BHCS M06-1.00 × 12 ZP	4
2	48839	Cover	1
3	48840	Support	1
4	50034	Screw HHCS M10-1.50 × 30 ZP	2
5	53054	WSHR M10 Spring Washer ZP	2
6	50002	WSHR M10 Standard Flat Washer ZP	2

Linkage Installations 2

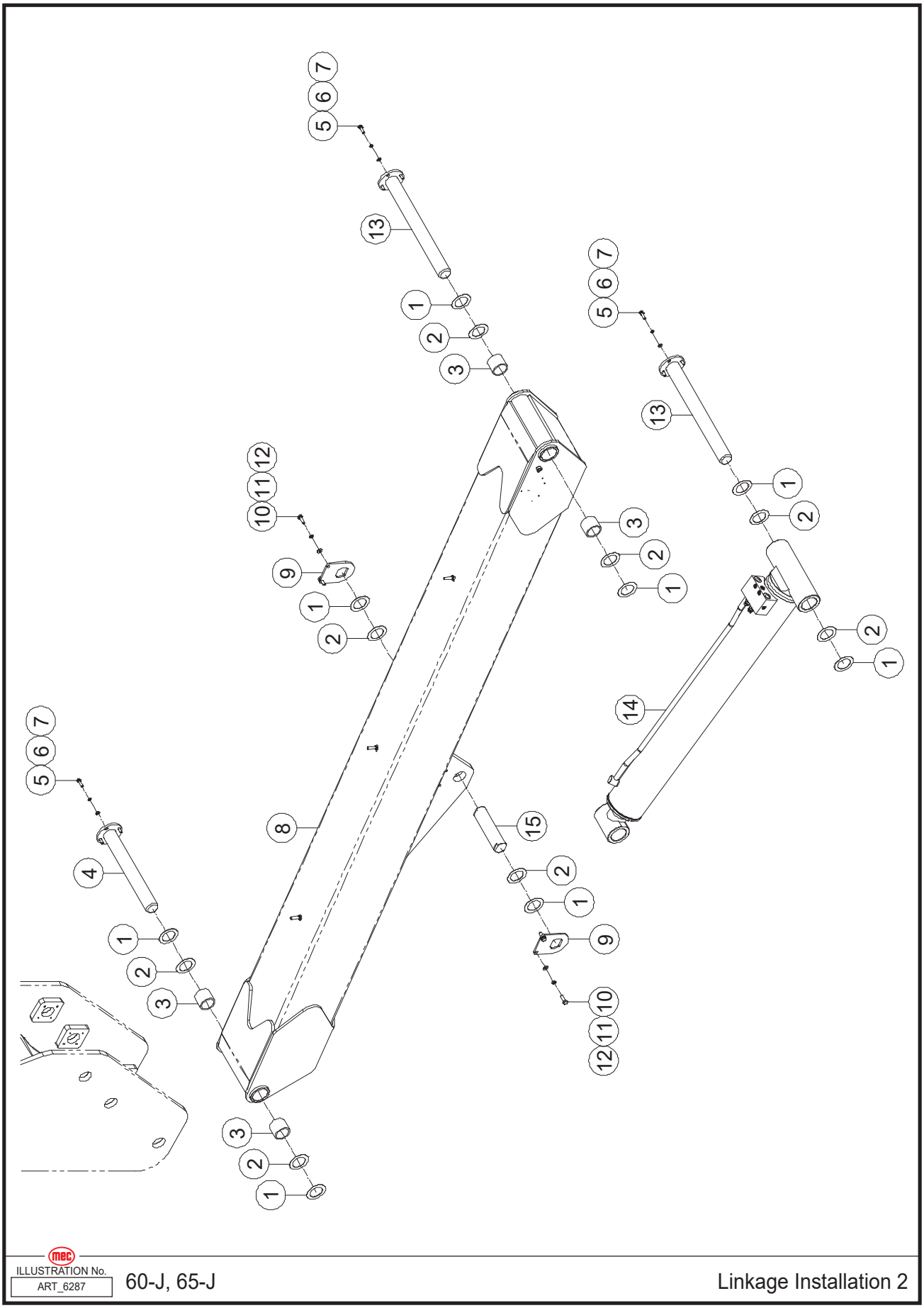

Item	Part Number	Description	Qty.
1	48834	Shim	8
2	48835	Shim	8
3	42091	Sleeve Bearing	4
4	48836	Pin, Pivot	1
5	50032	Screw HHCS M08-1.25 × 30 ZP	12
6	53055	WSHR M08 Spring Washer ZP	12
7	50001	WSHR M08 Standard Flat Washer ZP	12
8	48841	Linkage	1
9	48842	Cover	2
10	50034	Screw HHCS M10-1.50 × 30 ZP	4
11	53054	WSHR M10 Spring Washer ZP	4
12	50002	WSHR M10 Standard Flat Washer ZP	4
13	48838	Pin, Pivot	2
14	REF	Lower Lifting Cylinder Assembly (Refer to page 184)	1
15	48843	Pin, Pivot	1

REF - Reference

Linkage Accessory Installation 2

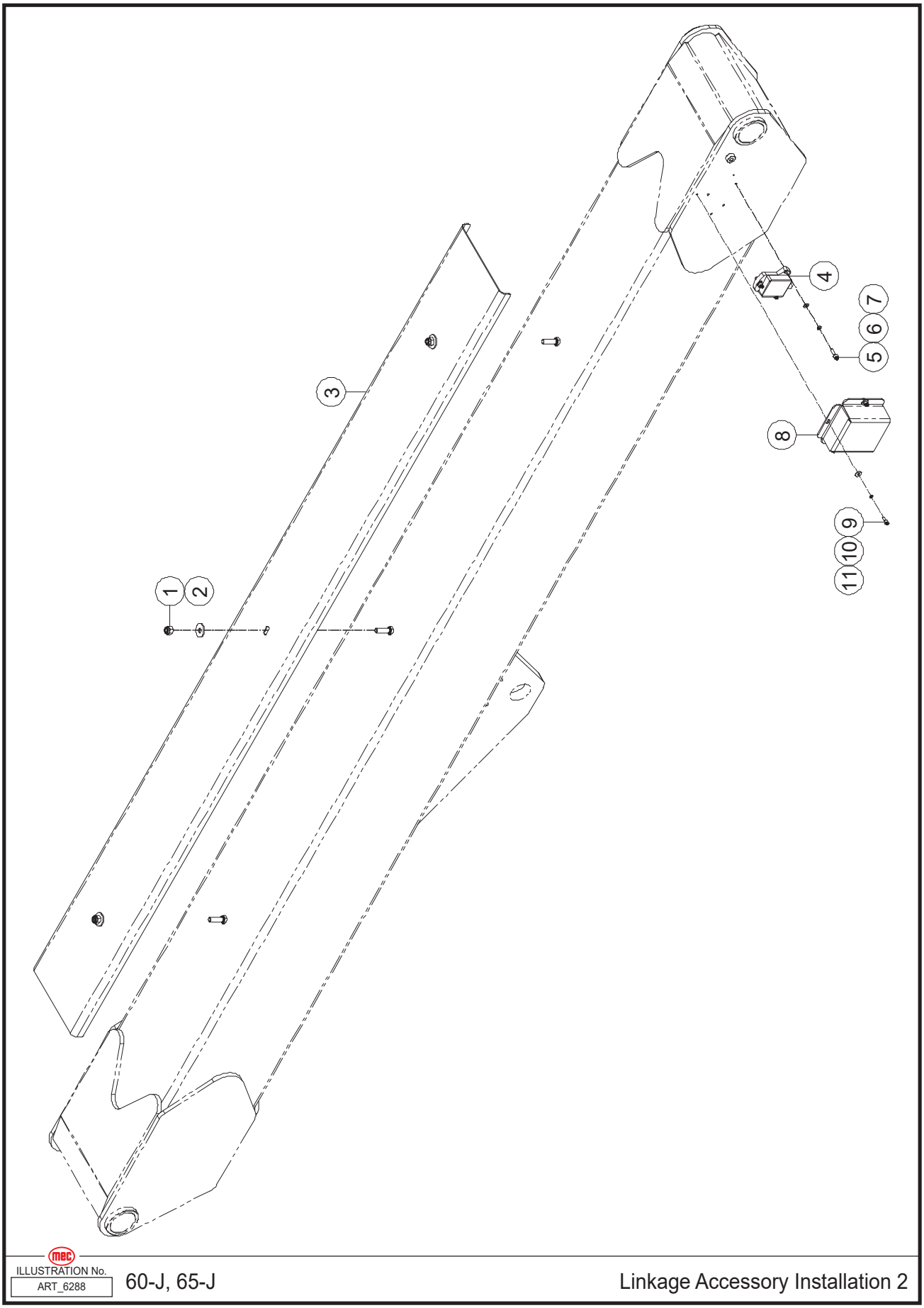

ILLUSTRATION No. ART_6288

60-J, 65-J

Linkage Accessory Installation 2

Item	Part Number	Description	Qty.
1	50049	Nut NNYL M10-1.50 ZP	3
2	53375	WSHR M10 Flat Fender Washer ZP	3
3	48844	Housing	1
4	47922	Sensor, Angle	1
5	53124	Screw SHCS M06-1.00 × 20 ZP	3
6	53046	WSHR M06 Spring Washer ZP	3
7	50000	WSHR M06 Standard Flat Washer ZP	3
8	47923	Cover, Sensor	1
9	53116	Screw SHCS M05-0.80 × 12 ZP	3
10	53043	WSHR M05 Spring Washer ZP	3
11	50525	WSHR M05 Flat Fender Washer ZP	3

Lifting Cylinder Assembly Installation

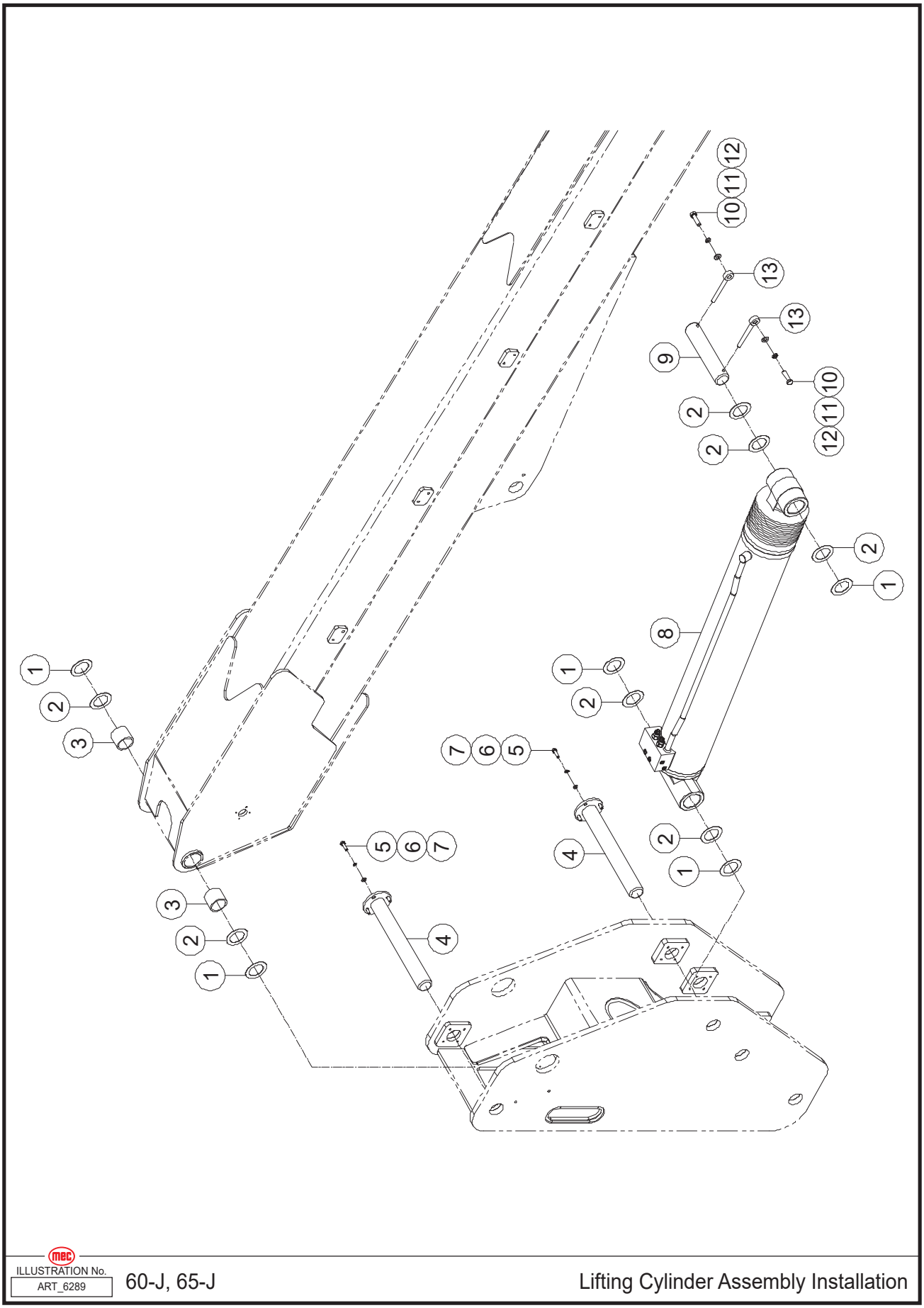

Item	Part Number	Description	Qty.
1	48834	Shim	5
2	48835	Shim	7
3	42091	Sleeve Bearing	2
4	48836	Pin, Pivot	2
5	50032	Screw HHCS M08-1.25 × 30 ZP	8
6	53055	WSHR M08 Spring Washer ZP	8
7	50001	WSHR M08 Standard Flat Washer ZP	8
8	REF	Lifting Cylinder Assembly (Refer to page 186)	1
9	48845	Pin, Pivot	1
10	53103	Screw HHCS M12-1.75 × 45 ZP	2
11	53148	WSHR M12 Spring Washer ZP	2
12	50003	WSHR M12 Standard Flat Washer ZP	2
13	45441	Pin, Lock	2

REF - Reference

Telescopic Boom

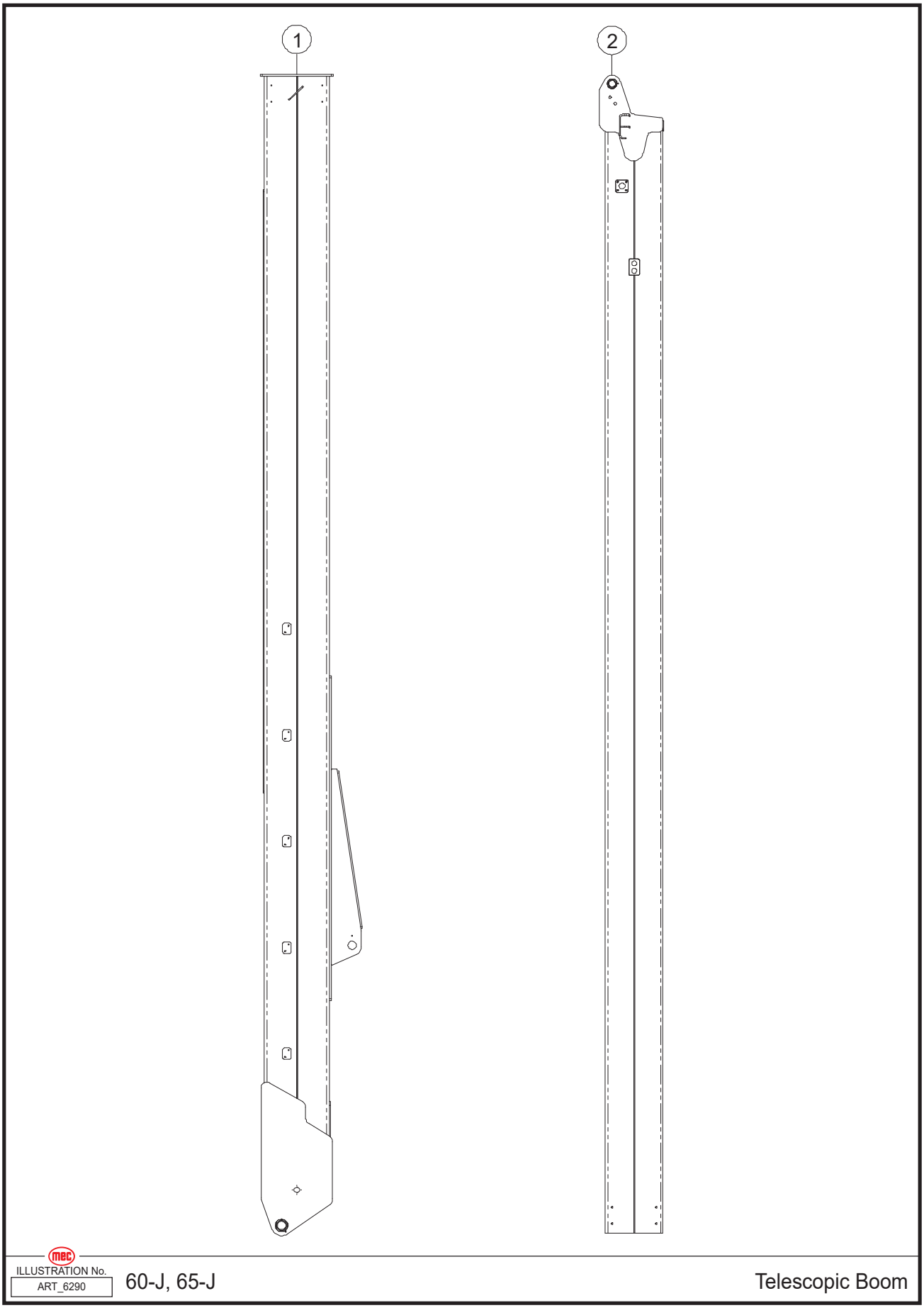

ILLUSTRATION No.
ART_6290

60-J, 65-J

Telescopic Boom

Item	Part Number	Description	Qty.
1	48847	Base Boom	1
2	48849	Second Boom	1

Base Boom Sliding Block Installation

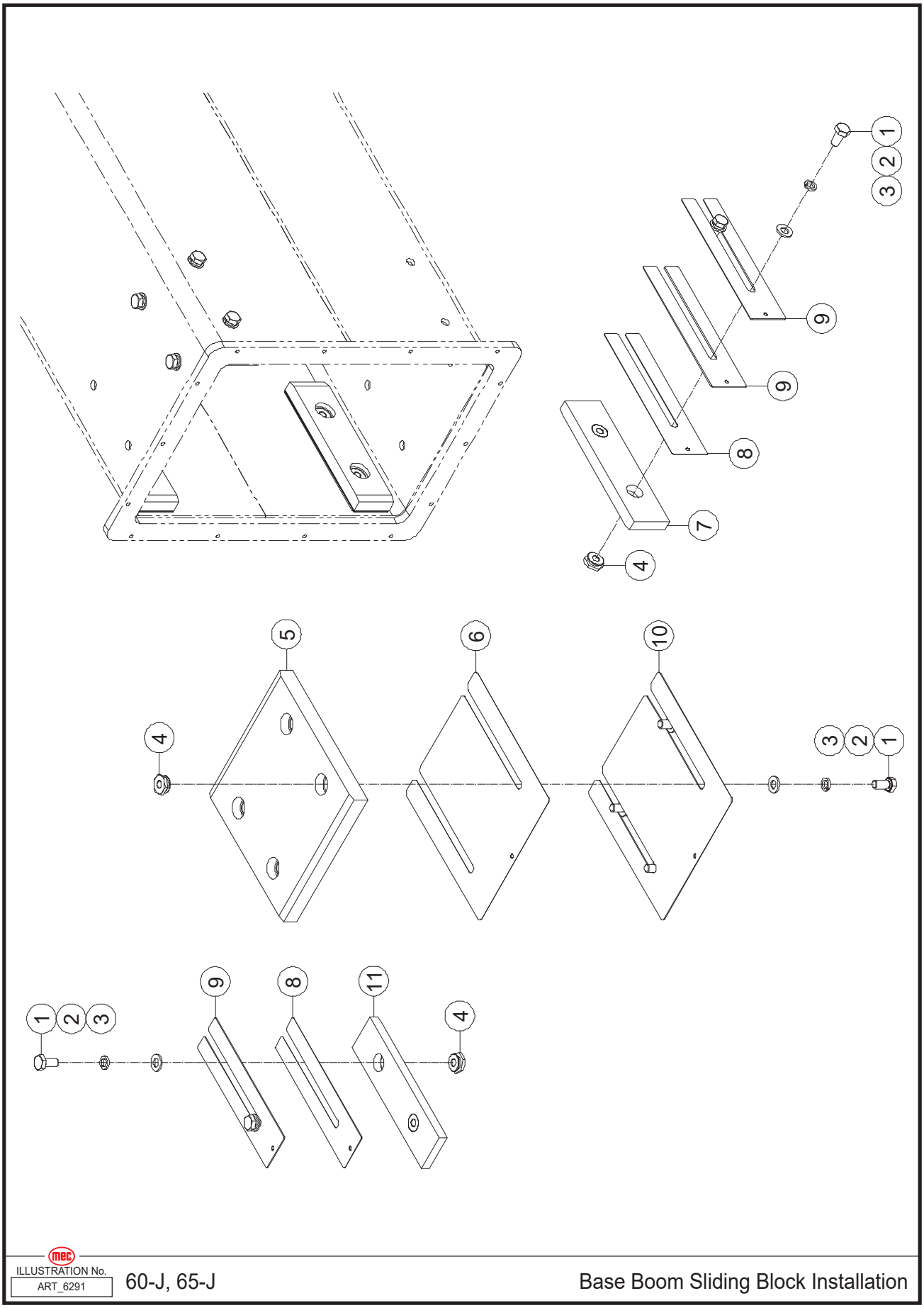

ILLUSTRATION No. ART_6291

60-J, 65-J

Base Boom Sliding Block Installation

Item	Part Number	Description	Qty.
1	50215	Screw HHCS M10-1.50 × 20 ZP	16
2	53054	WSHR M10 Spring Washer ZP	16
3	50002	WSHR M10 Standard Flat Washer ZP	16
4	47943	Insert	16
5	48850	Sliding Block	1
6	48851	Shim	1
7	48852	Sliding Block	4
8	48853	Shim	6
9	48854	Shim	10
10	48855	Shim	1
11	48856	Sliding Block	2

Second Boom Sliding Block Installation

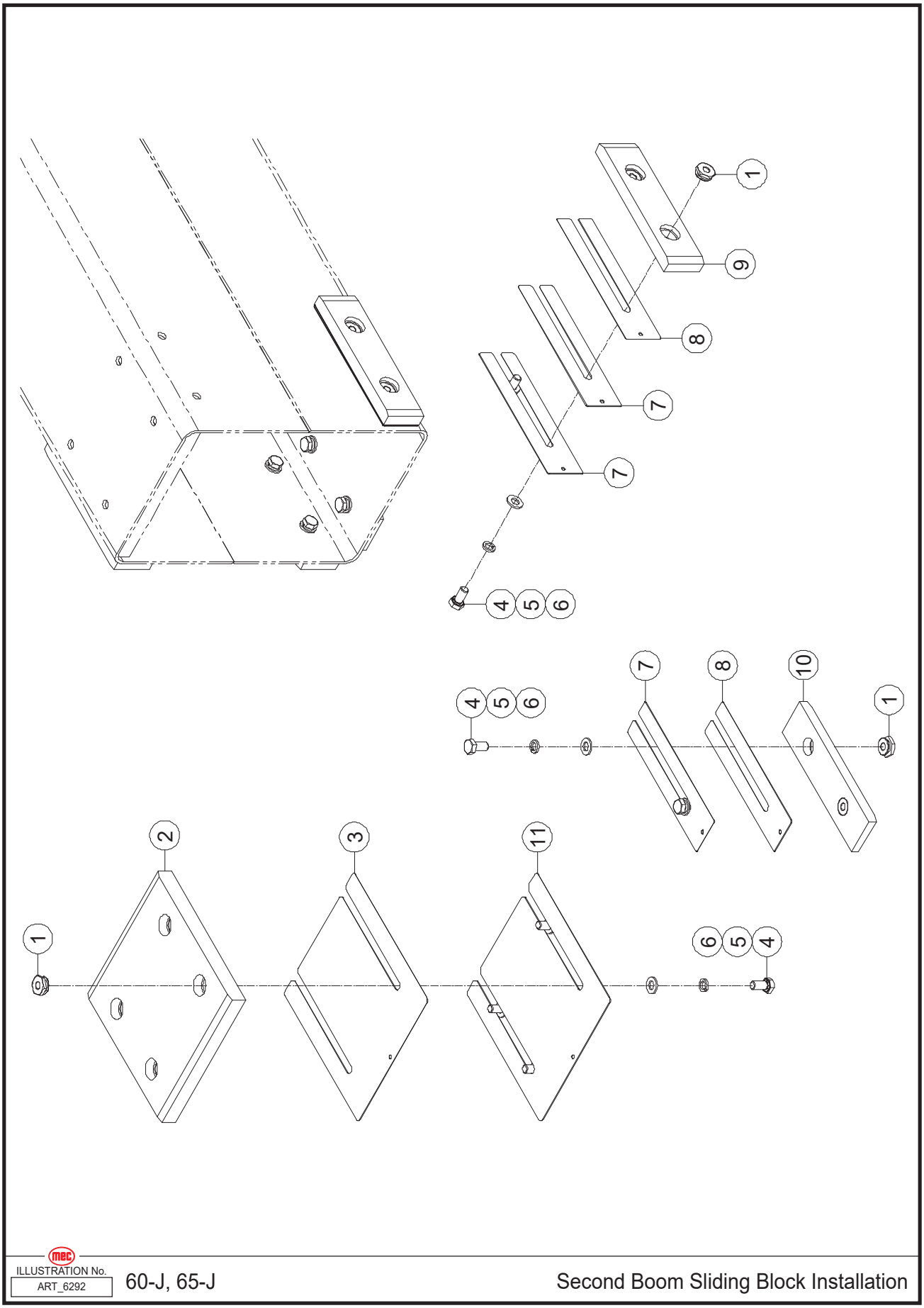

ILLUSTRATION No. ART_6292 60-J, 65-J Second Boom Sliding Block Installation

Item	Part Number	Description	Qty.
1	47943	Insert	16
2	48850	Sliding Block	1
3	48851	Shim	1
4	50215	Screw HHCS M10-1.50 × 20 ZP	16
5	53054	WSHR M10 Spring Washer ZP	16
6	50002	WSHR M10 Standard Flat Washer ZP	16
7	48854	Shim	10
8	48853	Shim	6
9	48852	Sliding Block	4
10	48856	Sliding Block	2
11	48855	Shim	1

Boom Shield Installation

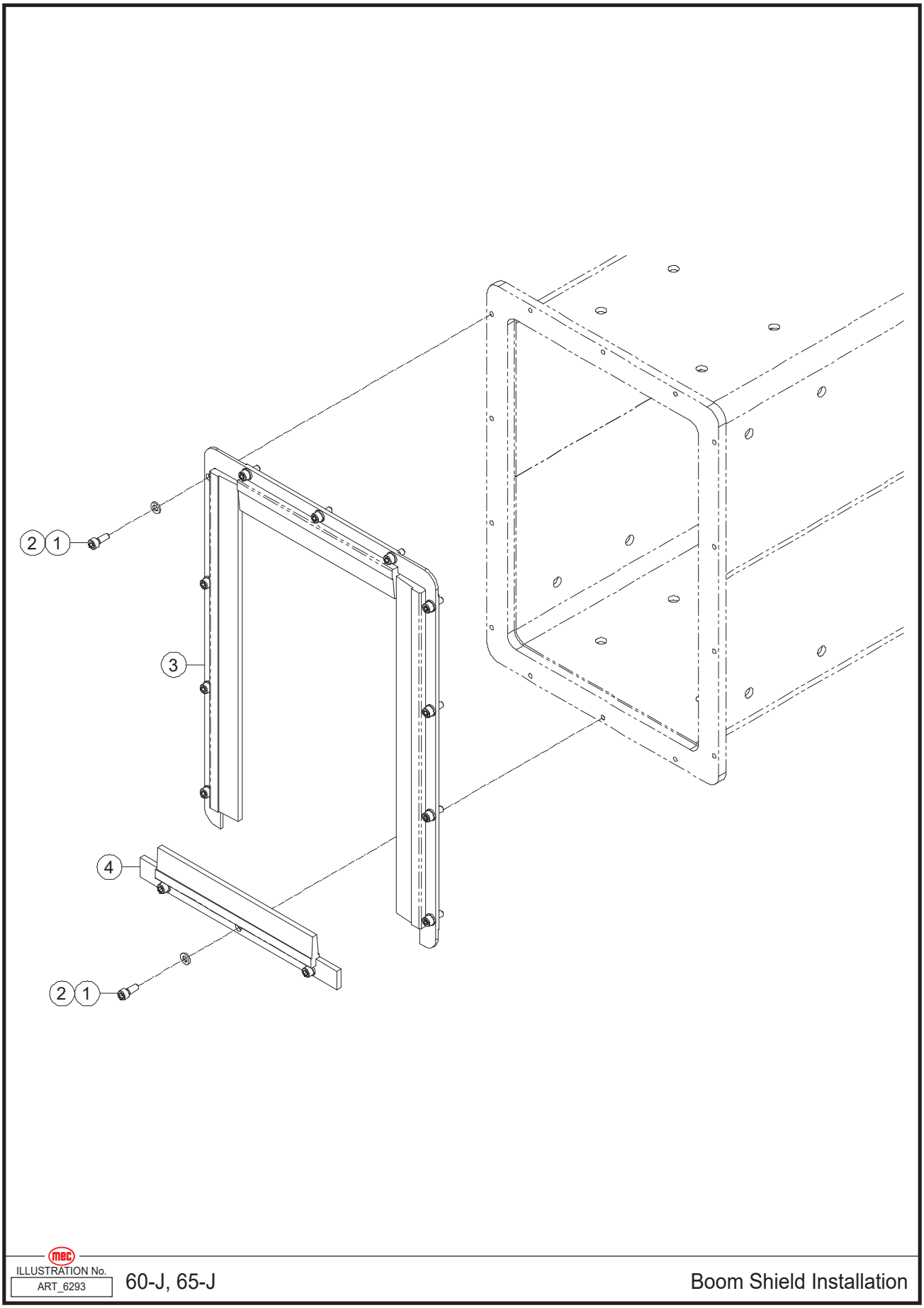

ILLUSTRATION No. ART_6293 60-J, 65-J Boom Shield Installation

Item	Part Number	Description	Qty.
1	53138	Screw SHCS M06-1.00 × 16 ZP	14
2	50000	WSHR M06 Standard Flat Washer ZP	14
3	48857	Guard	1
4	48858	Guard	1

Telescopic System Installation

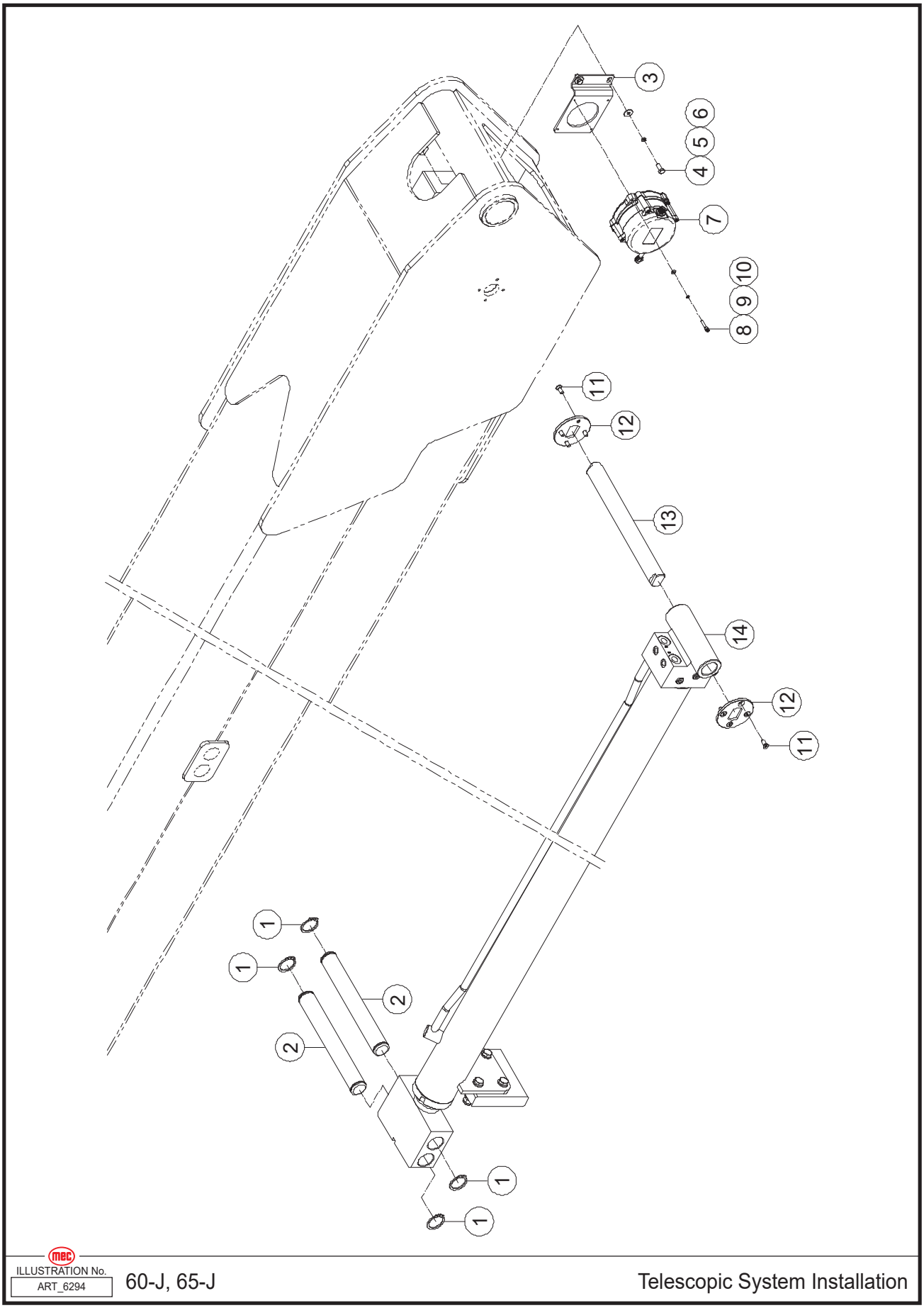

ILLUSTRATION No.
ART_6294

60-J, 65-J

Telescopic System Installation

Item	Part Number	Description	Qty.
1	48859	Washer	4
2	48860	Pin, Pivot	2
3	48861	Support	1
4	50445	Screw HHCS M06-1.00 × 16 ZP	2
5	53046	WSHR M06 Spring Washer ZP	2
6	50068	WSHR M06 Flat Fender Washer ZP	2
7	48862	Length Angle Sensor	1
8	53278	Screw SHCS M04-0.70 × 20 ZP	3
9	53062	WSHR M04 Spring Washer ZP	3
10	50284	WSHR M04 Standard Flat Washer ZP	3
11	53226	Screw CSCS M06-1.00 × 16 ZP	8
12	48863	Cover	2
13	48864	Pin, Pivot	1
14	REF	Telescopic Cylinder Assembly (Refer to page 188)	1

REF - Reference

Carrier System Installation 1

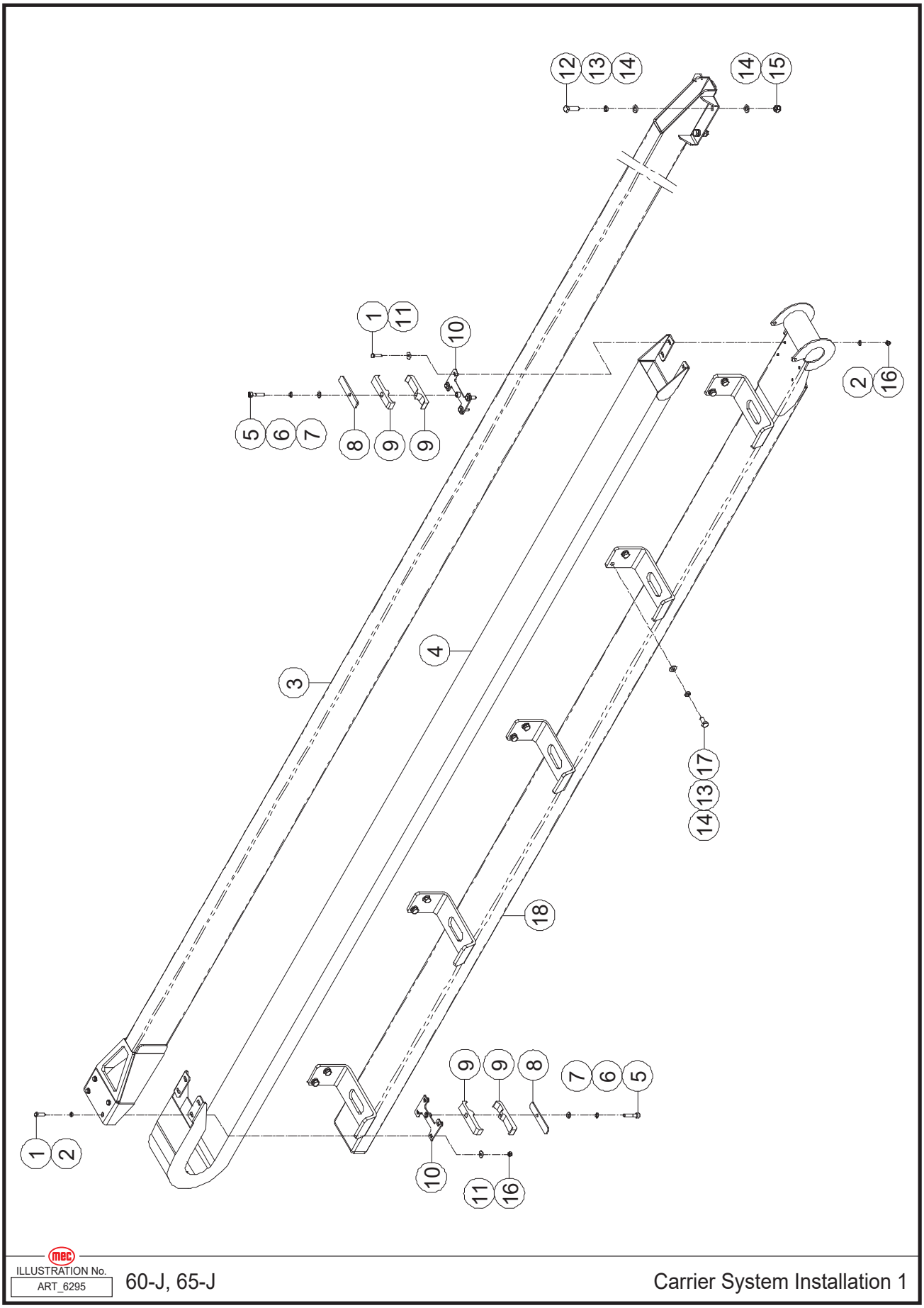

ILLUSTRATION No. ART_6295

60-J, 65-J

Carrier System Installation 1

Item	Part Number	Description	Qty.
1	50117	Screw HHCS M06-1.00 × 25 ZP	8
2	50000	WSHR M06 Standard Flat Washer ZP	8
3	48866	Support	1
4	48868	Chain	1
5	53127	Screw SHCS M08-1.25 × 40 ZP	2
6	53055	WSHR M08 Spring Washer ZP	2
7	50001	WSHR M08 Standard Flat Washer ZP	2
8	42267	Plate	2
9	42266	Clamp	4
10	42265	Support	2
11	50068	WSHR M06 Flat Fender Washer ZP	8
12	50332	Screw HHCS M10-1.50 × 35 ZP	4
13	53054	WSHR M10 Spring Washer ZP	12
14	50002	WSHR M10 Standard Flat Washer ZP	16
15	50049	Nut NNYL M10-1.50 ZP	4
16	50047	Nut NNYL M06-1.00 ZP	8
17	50215	Screw HHCS M10-1.50 × 20 ZP	8
18	48870	Support	1

Carrier System Installation 2

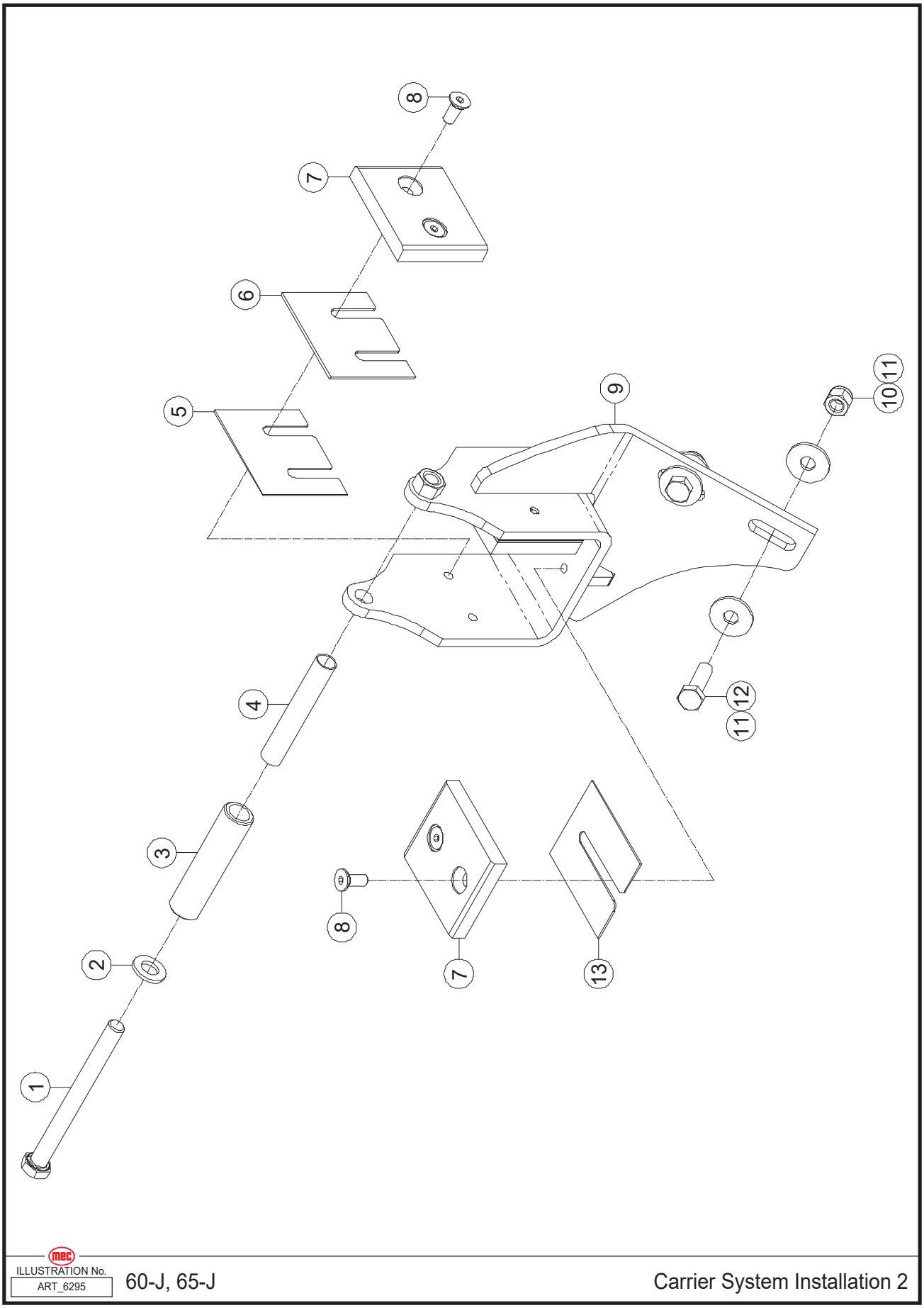

ILLUSTRATION No. ART_6295

60-J, 65-J

Carrier System Installation 2

Item	Part Number	Description	Qty.
1	53320	Screw HHCS M12-1.75 × 130 ZP	1
2	50003	WSHR M12 Standard Flat Washer ZP	1
3	48871	Roller	1
4	48872	Roller	1
5	47988	Shim	2
6	47989	Shim	2
7	47990	Sliding Block	3
8	53282	Screw CSCS M08-1.25 × 20 ZP	6
9	48873	Support	1
10	50049	Nut NNYL M10-1.50 ZP	2
11	53375	WSHR M10 Flat Fender Washer ZP	4
12	50332	Screw HHCS M10-1.50 × 35 ZP	2
13	47992	Shim	1

Jib Leveling Cylinder Installation

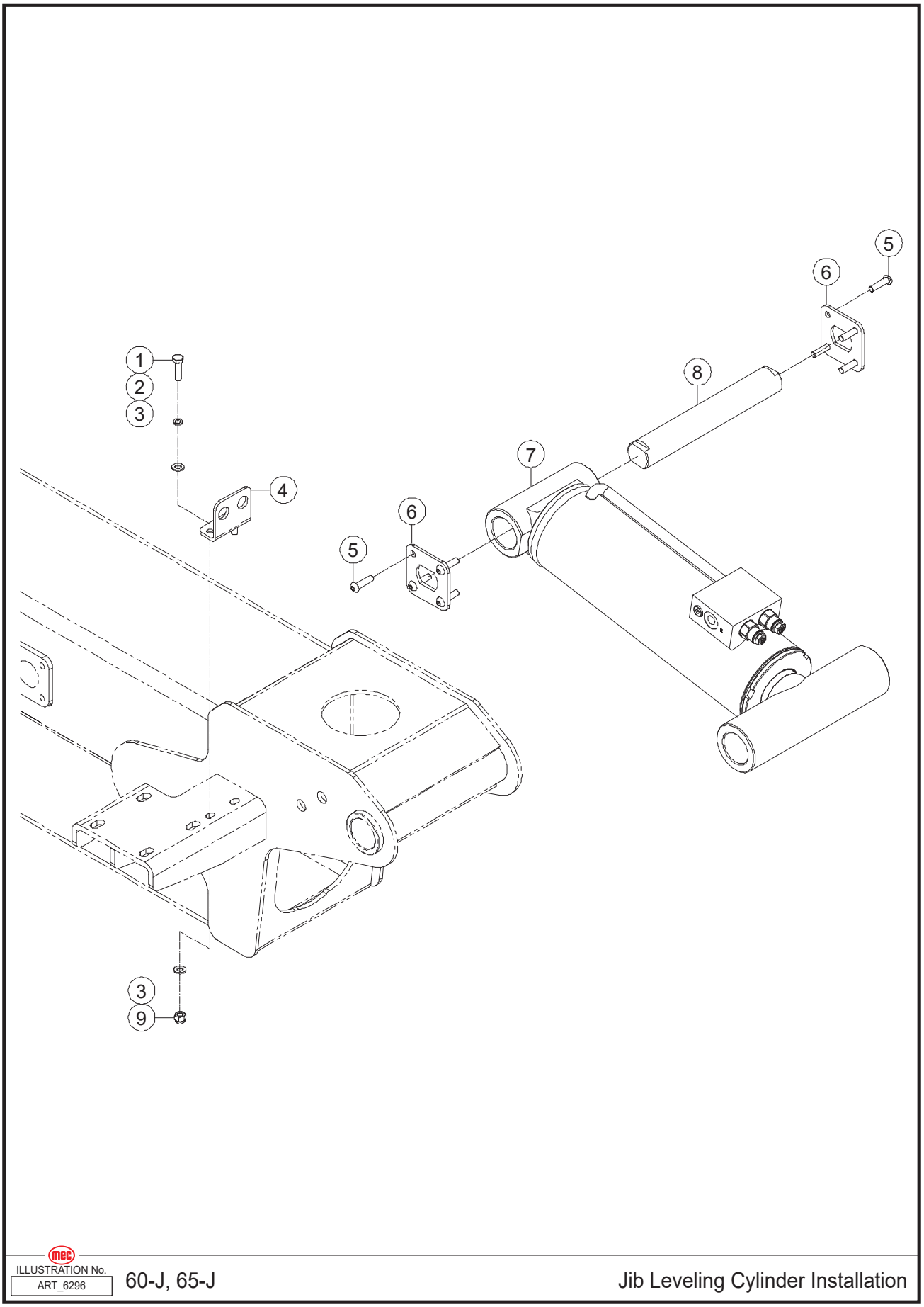

ILLUSTRATION No. ART_6296

60-J, 65-J

Jib Leveling Cylinder Installation

Item	Part Number	Description	Qty.
1	50032	Screw HHCS M08-1.25 × 30 ZP	2
2	53055	WSHR M08 Spring Washer ZP	2
3	50001	WSHR M08 Standard Flat Washer ZP	4
4	48874	Support	1
5	50414	Screw BHCS M08-1.25 × 30 ZP	8
6	48875	Cover	2
7	REF	Jib Leveling Cylinder Assembly (Refer to page 190)	1
8	48876	Pin, Pivot	1
9	50048	Nut NNYL M08-1.25 ZP	2

REF - Reference

Telescopic Boom Installation

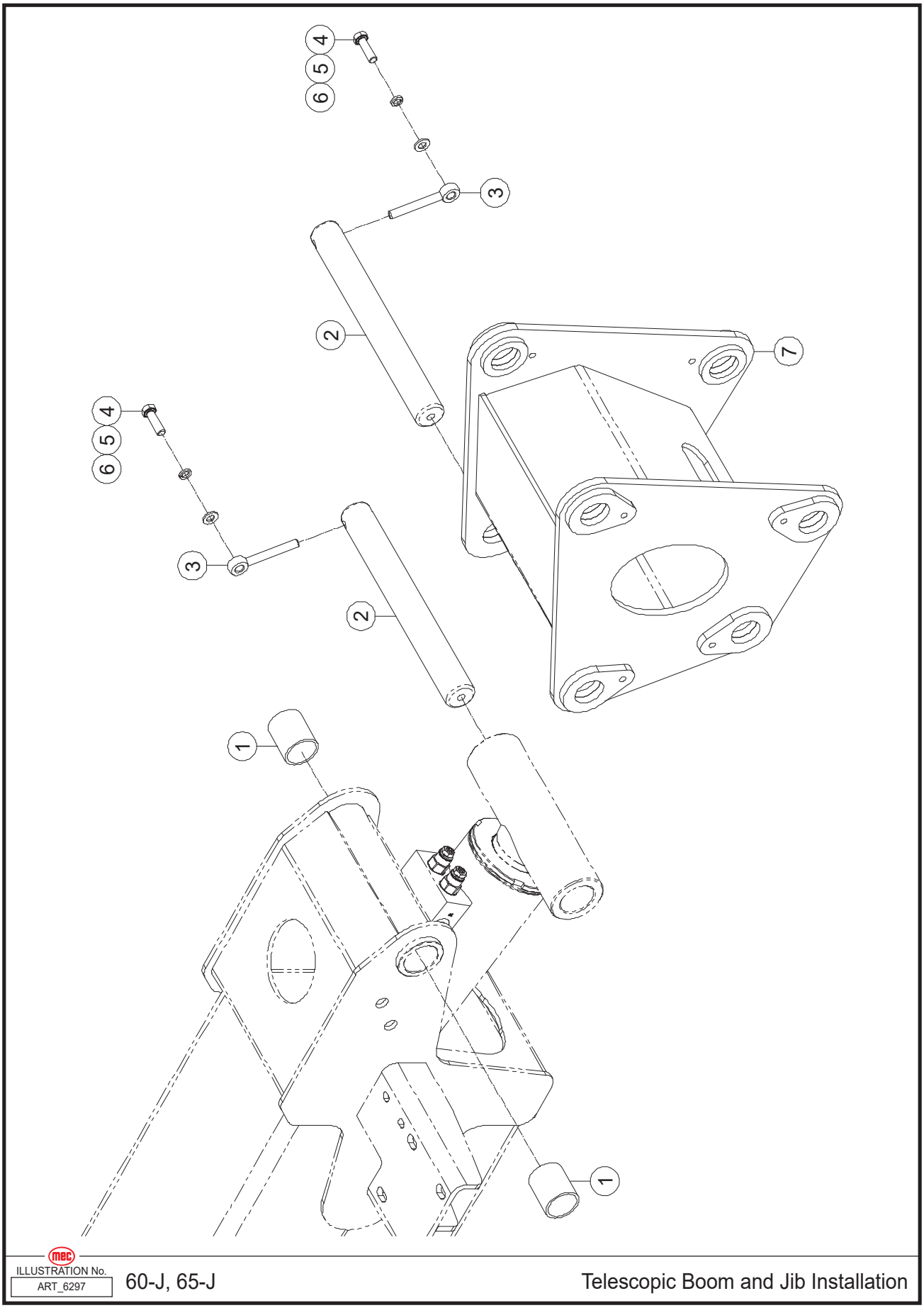

ILLUSTRATION No. ART_6297

60-J, 65-J

Telescopic Boom and Jib Installation

Item	Part Number	Description	Qty.
1	41103	Sleeve Bearing	2
2	48877	Pin, Pivot	2
3	41431	Pin, Lock	2
4	50332	Screw HHCS M10-1.50 × 35 ZP	2
5	53054	WSHR M10 Spring Washer ZP	2
6	50002	WSHR M10 Standard Flat Washer ZP	2
7	48878	Junction	1

Jib Components Assembly

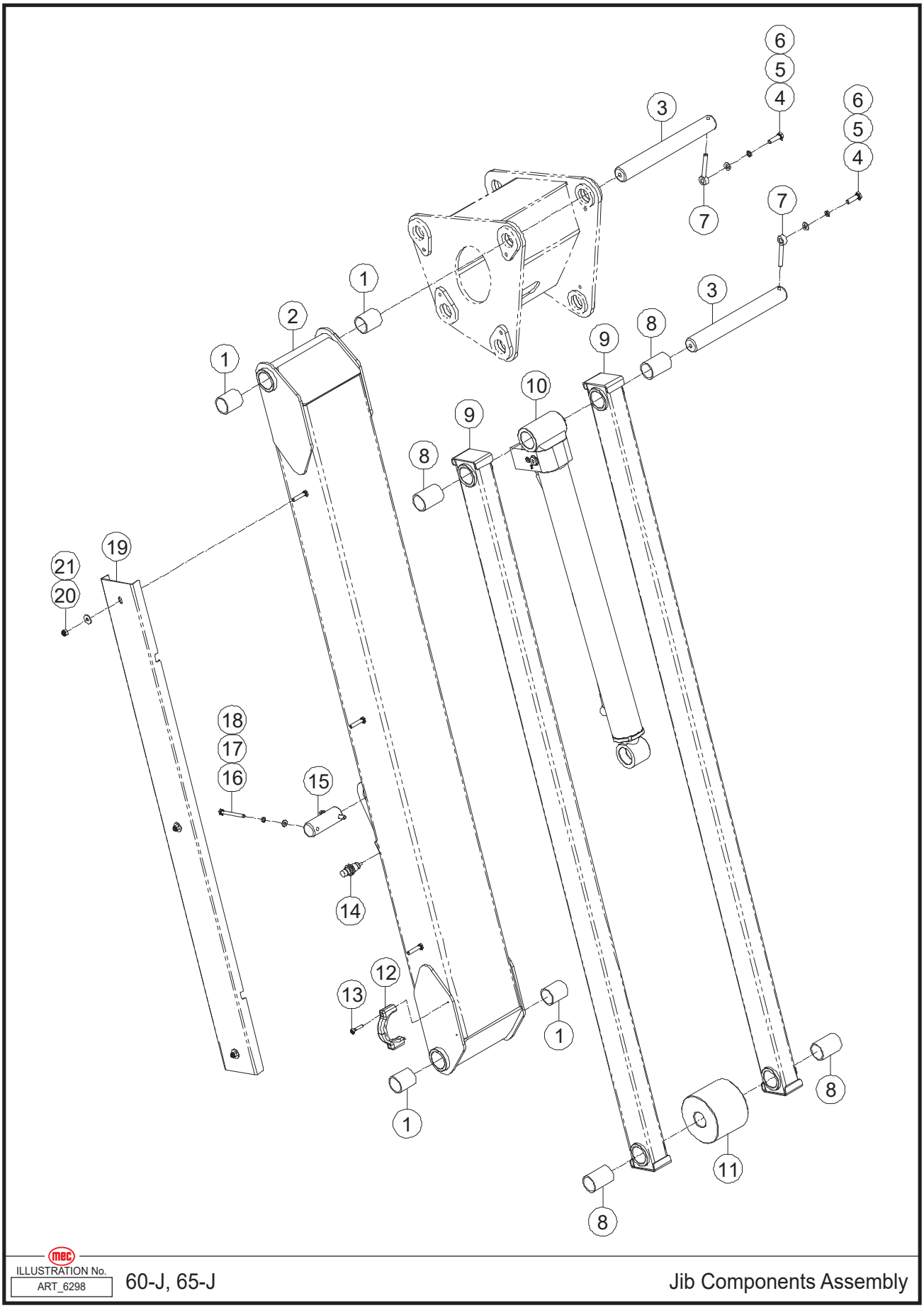

ILLUSTRATION No. ART_6298 60-J, 65-J Jib Components Assembly

Item	Part Number	Description	Qty.
1	41103	Sleeve Bearing	4
2	45448	Linker, Upper	1
3	48877	Pin, Pivot	2
4	50332	Screw HHCS M10-1.50 × 35 ZP	2
5	53054	WSHR M10 Spring Washer ZP	2
6	50002	WSHR M10 Standard Flat Washer ZP	2
7	41431	Pin, Lock	2
8	45444	Sleeve Bearing	4
9	45445	Linker, Lower	2
10	REF	Jib Lifting Cylinder Assembly (Refer to page 192)	1
11	45446	Roller	1
12	45449	Clamp	1
13	53207	Screw SHCS M06-1.00 × 30 ZP	2
14	47868	Proximity Switch	1
15	45447	Pin, Pivot	1
16	50018	Screw HHCS M08-1.25 × 80 ZP	2
17	53055	WSHR M08 Spring Washer ZP	2
18	50001	WSHR M08 Standard Flat Washer ZP	2
19	45442	Channel	1
20	50048	Nut NNYL M08-1.25 ZP	3
21	50218	WSHR M08 Flat Fender Washer ZP	3

REF - Reference

Platform Rotator Installation

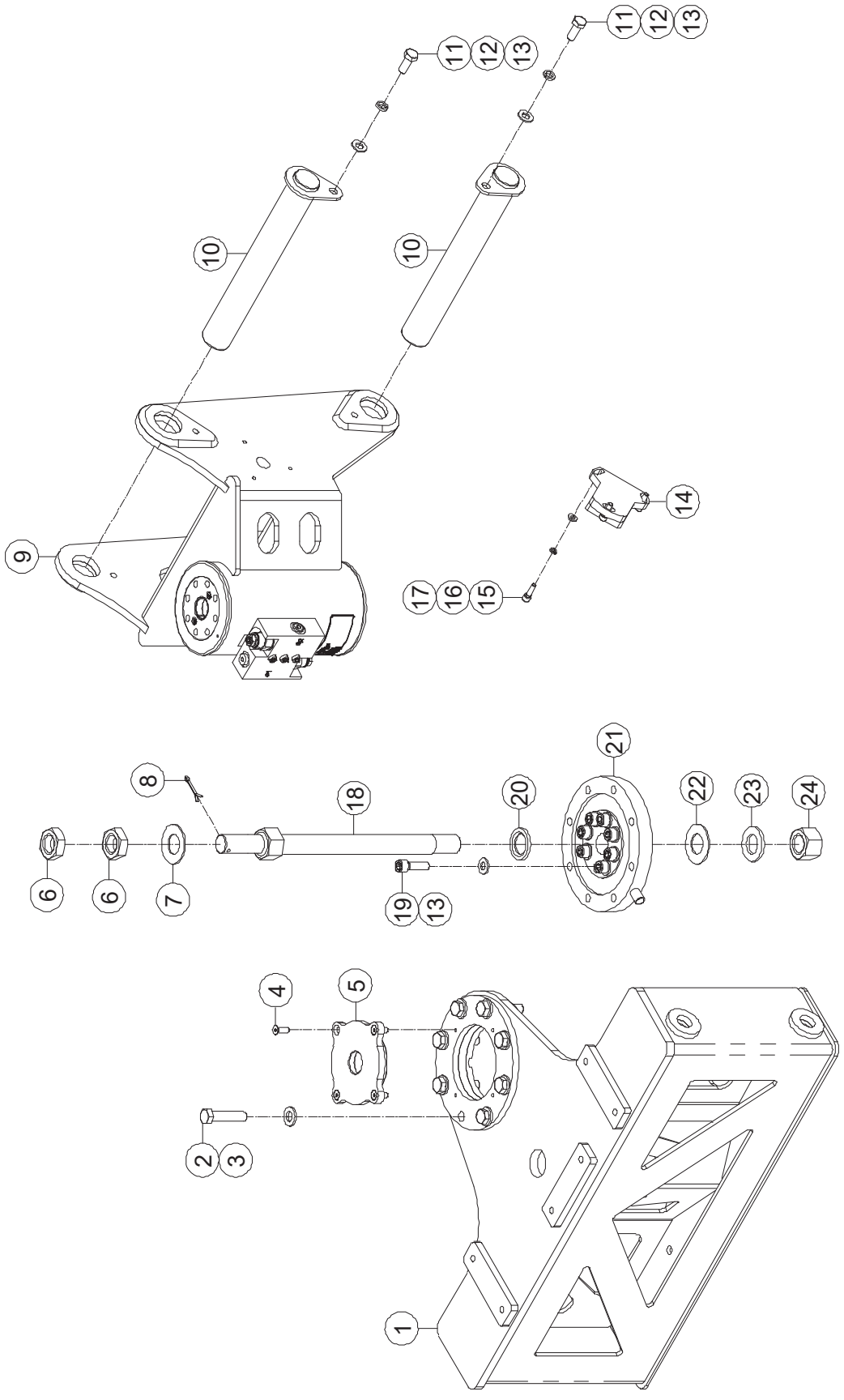

ILLUSTRATION No. ART_6299

60-J, 65-J

Platform Rotator Installation

Item	Part Number	Description	Qty.
1	45491	Support	1
2	50301	Screw HHCS M12-1.75 × 55 ZP	8
3	50003	WSHR M12 Standard Flat Washer ZP	8
4	50561	Screw CSCS M06-1.00 × 20 ZP	4
5	45450	Cover	1
6	53571	Nut NHEX M24-2.00, Thin Nut Chamfered ZP	2
7	45451	Disc Spring	1
8	41322	Cotter Pin	1
9	45453	Rotate Cylinder Assembly	1
10	45454	Pin, Pivot	2
11	50033	Screw HHCS M10-1.50 × 25 ZP	2
12	53054	WSHR M10 Spring Washer ZP	2
13	50002	WSHR M10 Standard Flat Washer ZP	10
14	45455	Angle sensor	1
15	53124	Screw SHCS M06-1.00 × 20 ZP	3
16	53046	WSHR M06 Spring Washer ZP	3
17	50000	WSHR M06 Standard Flat Washer ZP	3
18	45456	Pin, Pivot	1
19	50378	Screw SHCS M10-1.50 × 35 ZP	8
20	45457	Washer	1
21	45458	Load Sensor	1
22	45459	Shim	1
23	53158	WSHR M24 Standard Flat Washer ZP	1
24	53572	Nut NHEX M24-2.00 ZP	1

Jib Valve Block Installation

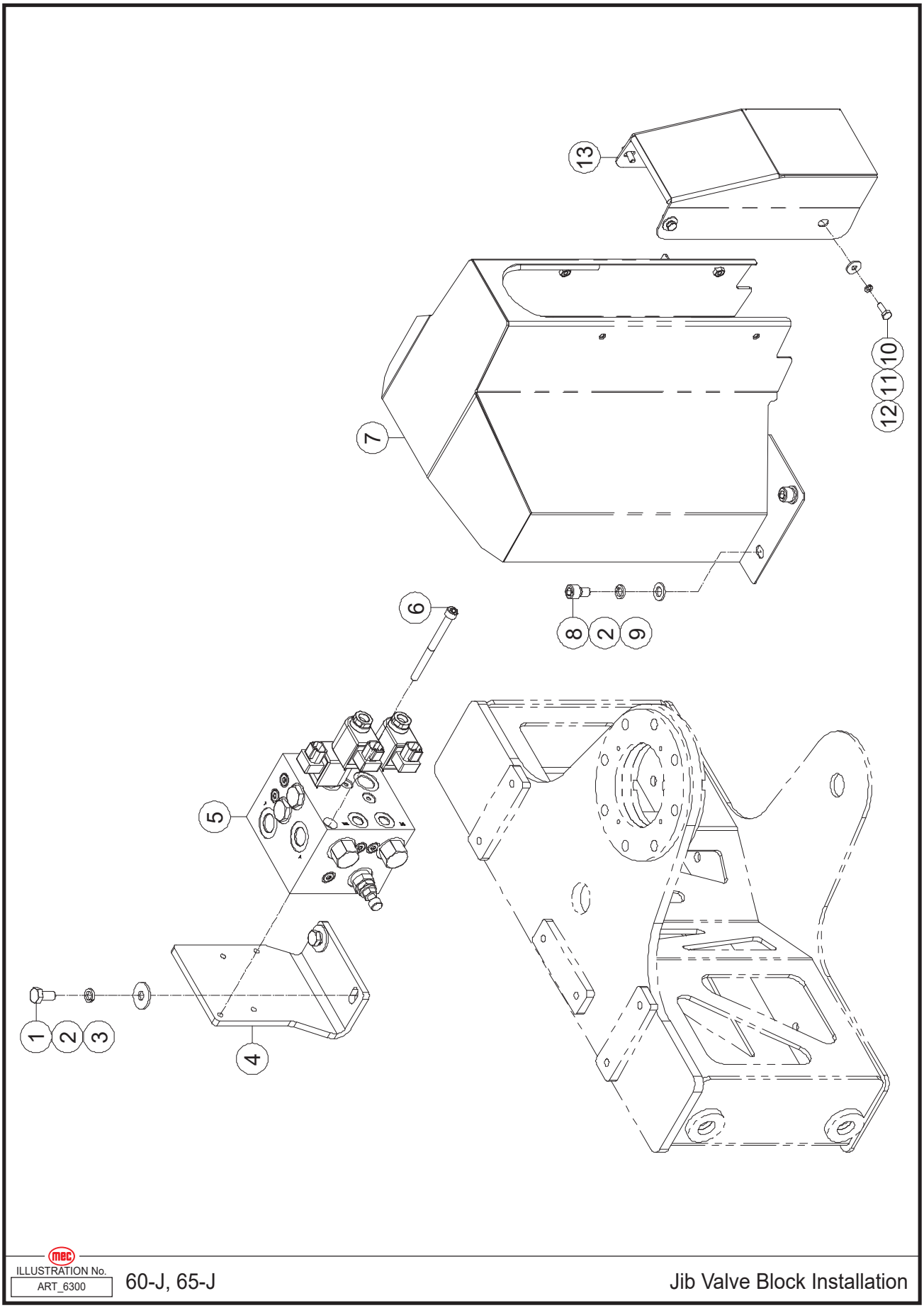

ILLUSTRATION No. ART_6300 60-J, 65-J Jib Valve Block Installation

Item	Part Number	Description	Qty.
1	50215	Screw HHCS M10-1.50 × 20 ZP	2
2	53054	WSHR M10 Spring Washer ZP	6
3	53375	WSHR M10 Flat Fender Washer ZP	2
4	45460	Bracket	1
5	45461	Jib Valve Manifold Assembly (Refer to page 172)	1
6	50270	Screw SHCS M08-1.25 × 100	2
7	45462	Housing	1
8	53573	Screw SHCS M10-1.50 × 16 ZP	4
9	50002	WSHR M10 Standard Flat Washer ZP	4
10	50445	Screw HHCS M06-1.00 × 16 ZP	4
11	53046	WSHR M06 Spring Washer ZP	4
12	50068	WSHR M06 Flat Fender Washer ZP	4
13	45463	Housing	1

Jib Valve Manifold Assembly

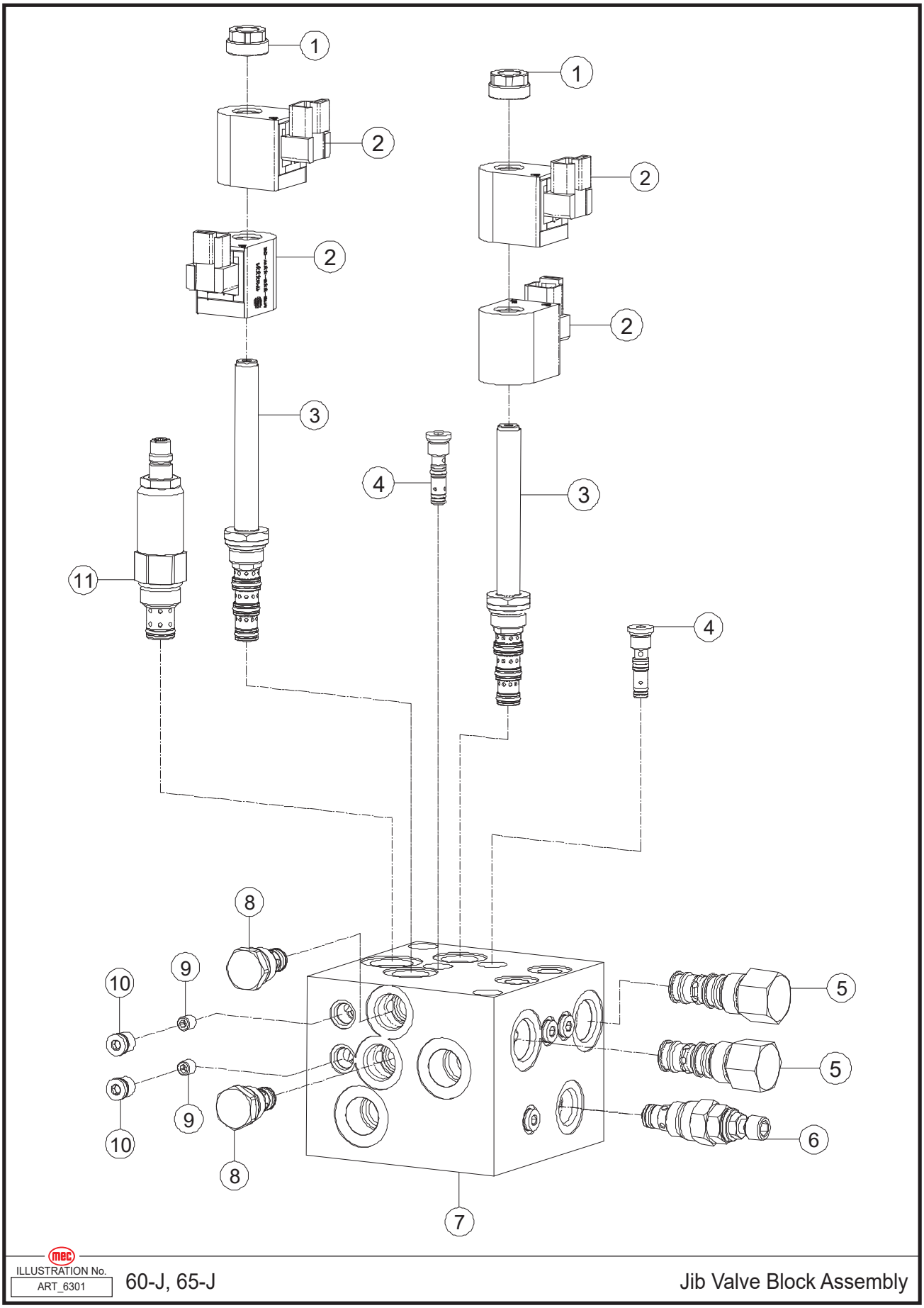

ILLUSTRATION No. ART_6301

60-J, 65-J

Jib Valve Block Assembly

Item	Part Number	Description	Qty.
1	43405	Nut	2
2	43406	Coil	4
3	45464	Cartridge, Proportional Valve	2
4	43419	Cartridge, Shuttle Valve	2
5	43400	Logic Element	2
6	45466	Cartridge, Relief Valve	1
7	45467	Body	1
8	43439	Cartridge, Check Valve	2
9	45469	Orifice	2
10	47597	Plug	8
11	47593	Cartridge, Relief Valve	1

Platform Components

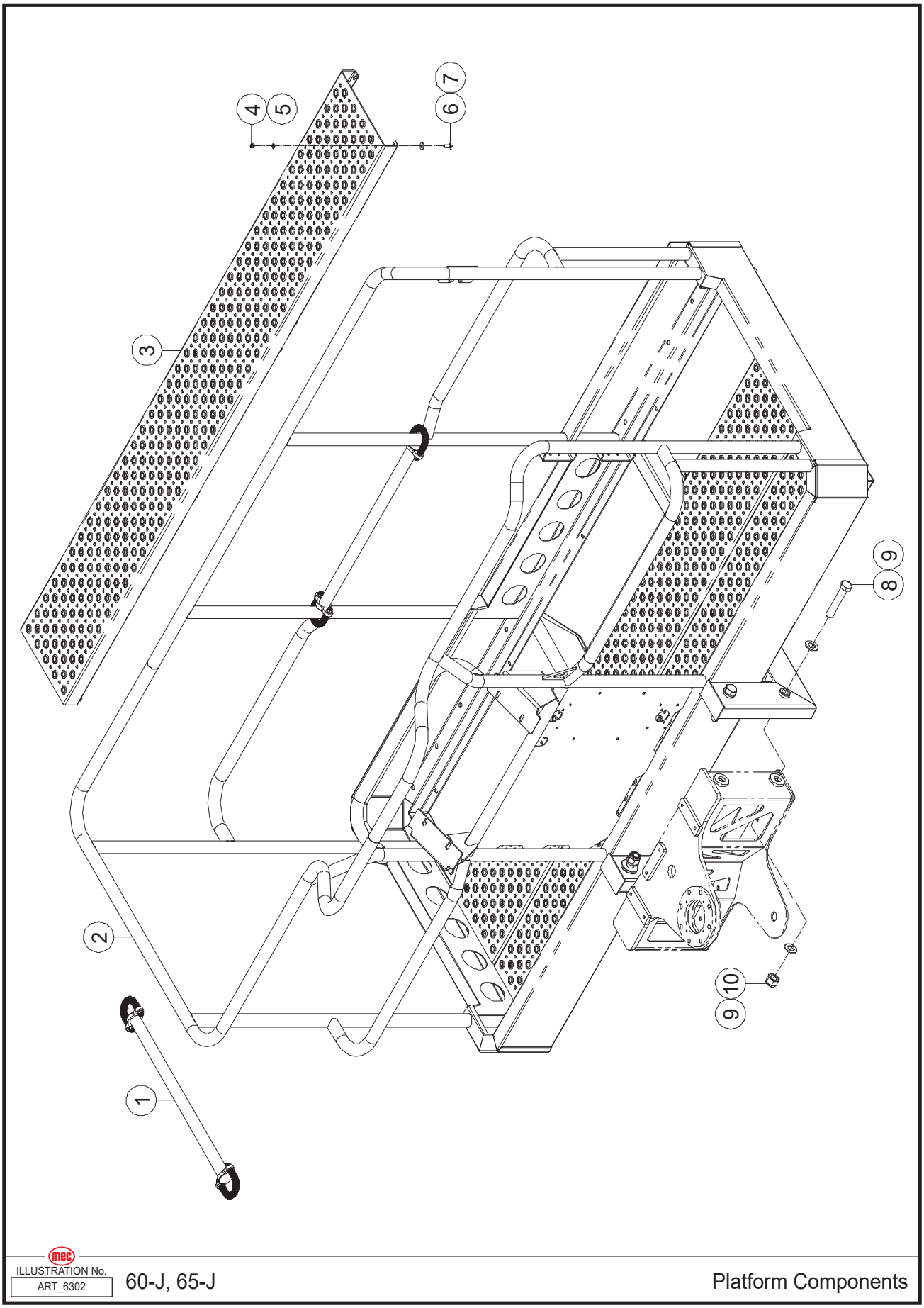

ILLUSTRATION No. ART_6302

60-J, 65-J

Platform Components

Item	Part Number	Description	Qty.
1	REF	Platform Lifting Gate Assembly (Refer to page 178)	2
2	45470	Platform	1
3	45471	Deck Plate	3
4	50047	Nut NNYL M06-1.00 ZP	34
5	50000	WSHR M06 Standard Flat Washer ZP	34
6	50028	Screw HHCS M06-1.00 × 20 ZP	34
7	50068	WSHR M06 Flat Fender Washer ZP	34
8	53002	Screw HHCS M20-2.50 × 110 ZP	4
9	50005	WSHR M20 Standard Flat Washer ZP	8
10	50052	Nut NNYL M20-2.50 ZP	4

REF - Reference

Platform Entry Gate Assembly

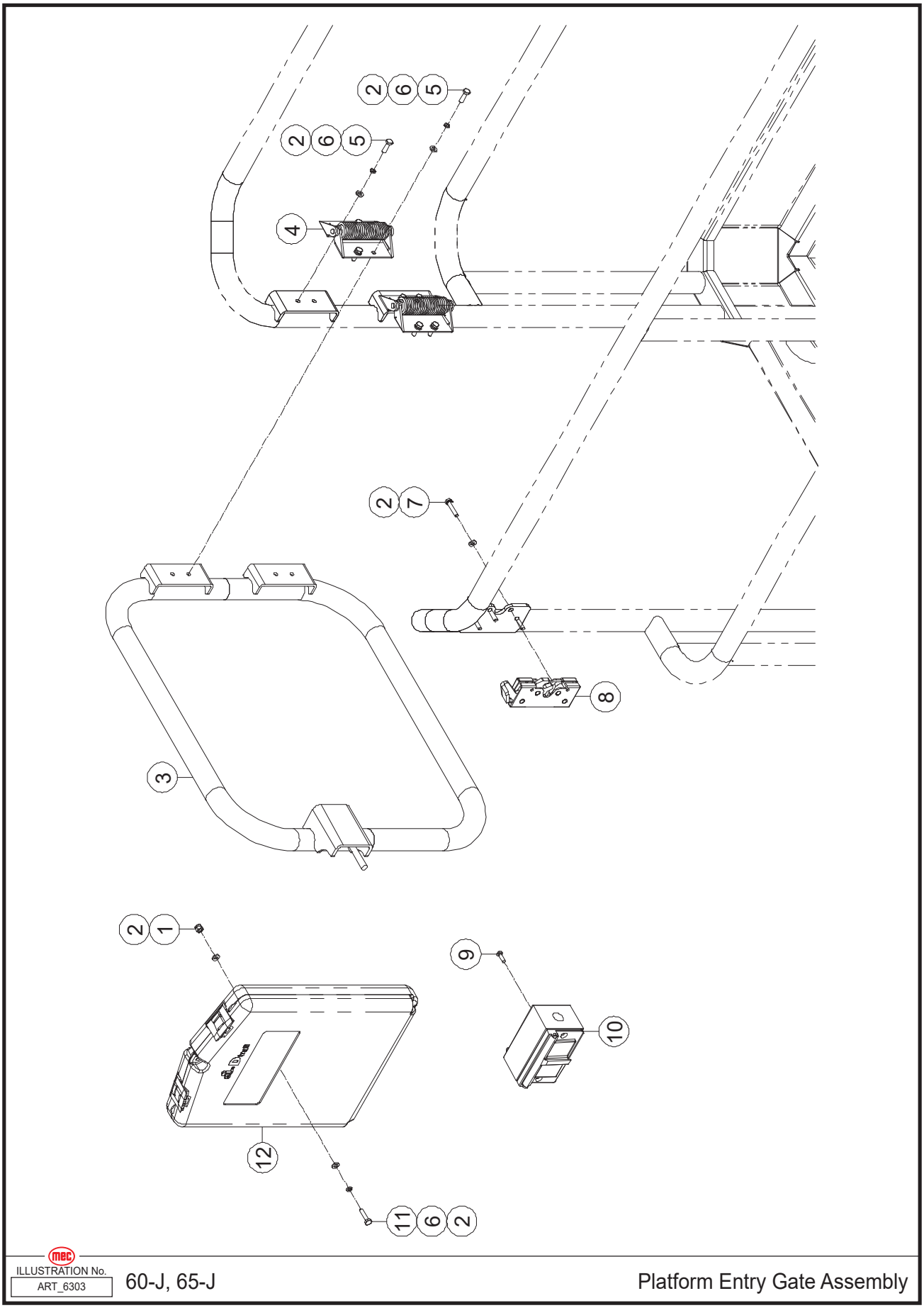

ILLUSTRATION No. ART_6303 60-J, 65-J Platform Entry Gate Assembly

Item	Part Number	Description	Qty.
1	50047	Nut NNYL M06-1.00 ZP	4
2	50000	WSHR M06 Standard Flat Washer ZP	20
3	45472	Side Swing Gate Assembly	1
4	44764	Hinge	2
5	50028	Screw HHCS M06-1.00 × 20 ZP	8
6	53046	WSHR M06 Spring Washer ZP	12
7	50214	Screw HHCS M06-1.00 × 30 ZP	4
8	41067	Lock	1
9	53351	Screw PHMS M05-0.80 × 16 ZP	4
10	42613	Electrical Outlet	1
11	50117	Screw HHCS M06-1.00 × 25 ZP	4
12	43319	Manual Box	1

Platform Lifting Gate Assembly

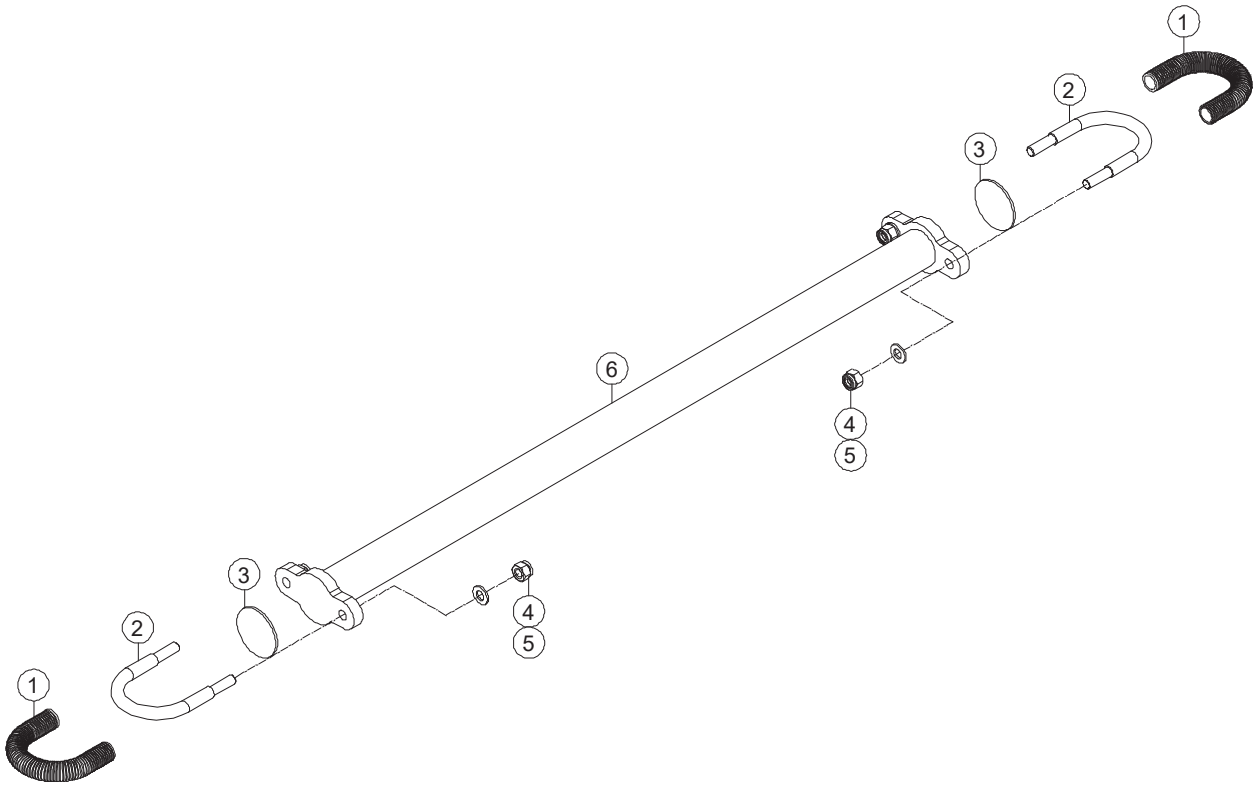

ILLUSTRATION No. ART_6304 60-J, 65-J Platform Lifting Gate Assembly

Item	Part Number	Description	Qty.
1	45476	Jacket	2
2	45477	Clamp	2
3	45478	Anti-Scratch	2
4	50048	Nut NNYL M08-1.25 ZP	4
5	50001	WSHR M08 Standard Flat Washer ZP	4
6	45479	Gate, Lift	1

Platform Secondary Guarding Assembly

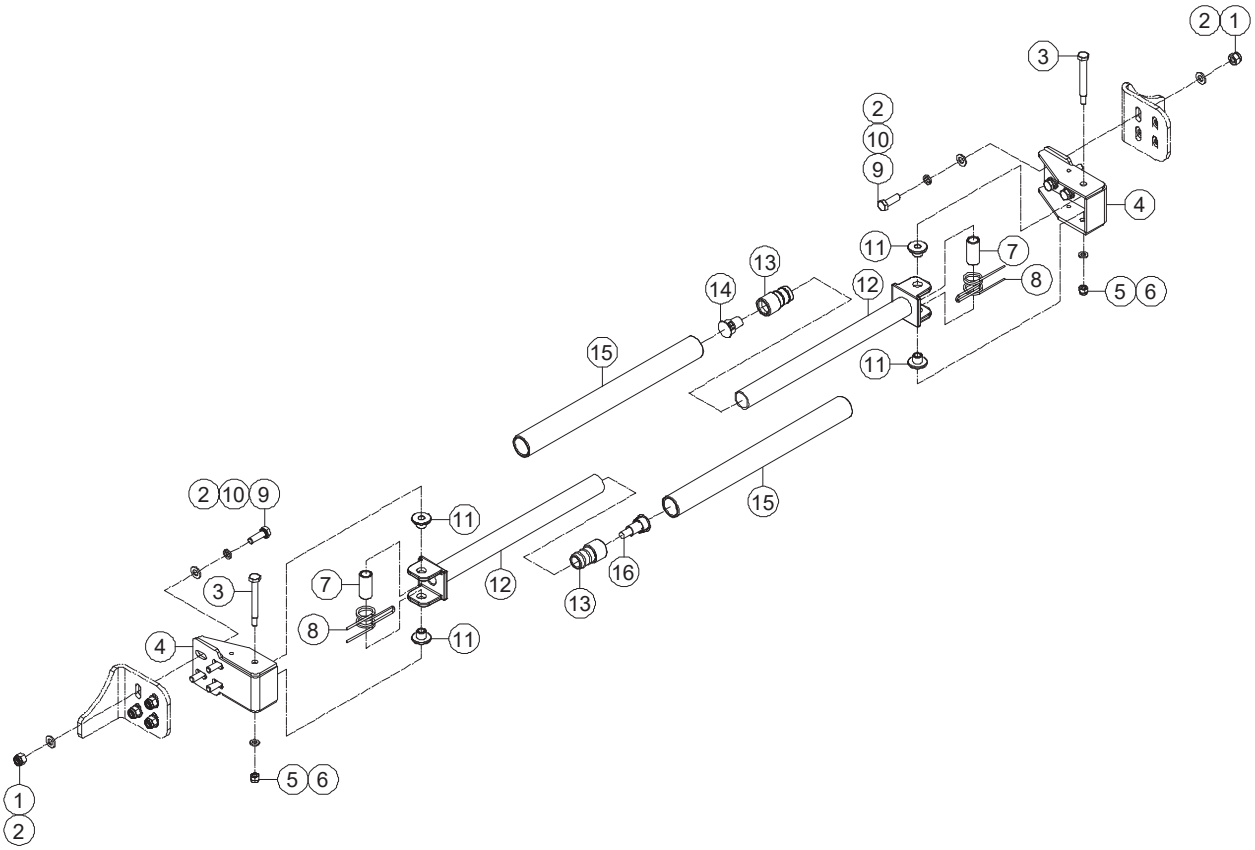

ILLUSTRATION No. ART_6305 60-J, 65-J Platform Secondary Guarding Assembly

Item	Part Number	Description	Qty.
1	50048	Nut NNYL M08-1.25 ZP	8
2	50001	WSHR M08 Standard Flat Washer ZP	16
3	45480	Pin	2
4	45490	Bracket, Contact Alarm	2
5	50047	Nut NNYL M06-1.00 ZP	2
6	50000	WSHR M06 Standard Flat Washer ZP	2
7	45482	Tube	2
8	45483	Spring	2
9	50031	Screw HHCS M08-1.25 × 25 ZP	8
10	53055	WSHR M08 Spring Washer ZP	8
11	45484	Bearing	4
12	45485	Tube, Contact Alarm	2
13	45486	Plug, Nylon	2
14	45487	Magnet	1
15	45488	Jacket, Foam	2
16	45489	Door Magnetic Switch	1

Axle Lockout Cylinder Assembly

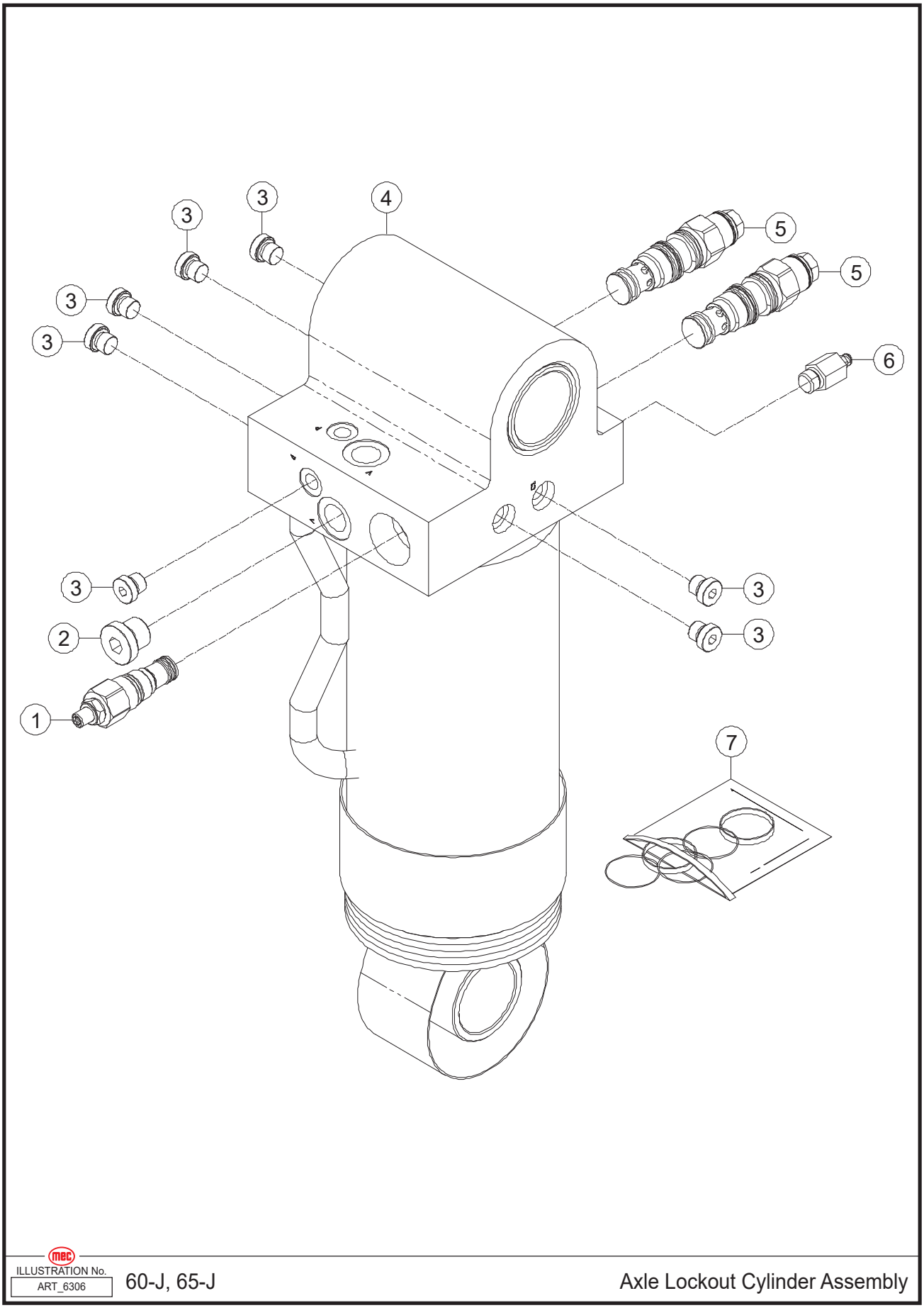

ILLUSTRATION No. ART_6306 60-J, 65-J Axle Lockout Cylinder Assembly

Item	Part Number	Description	Qty.
1	48879	Check Throttle Valve	1
2	41087	Plug	1
3	48880	Plug	7
4	48881	Axle Lockout Cylinder Assembly	1
5	48882	Cartridge, Counterbalance	2
6	48883	Exhaust Valve	1
7	48884	Seal Kit 90/45	1

Lower Lifting Cylinder Assembly

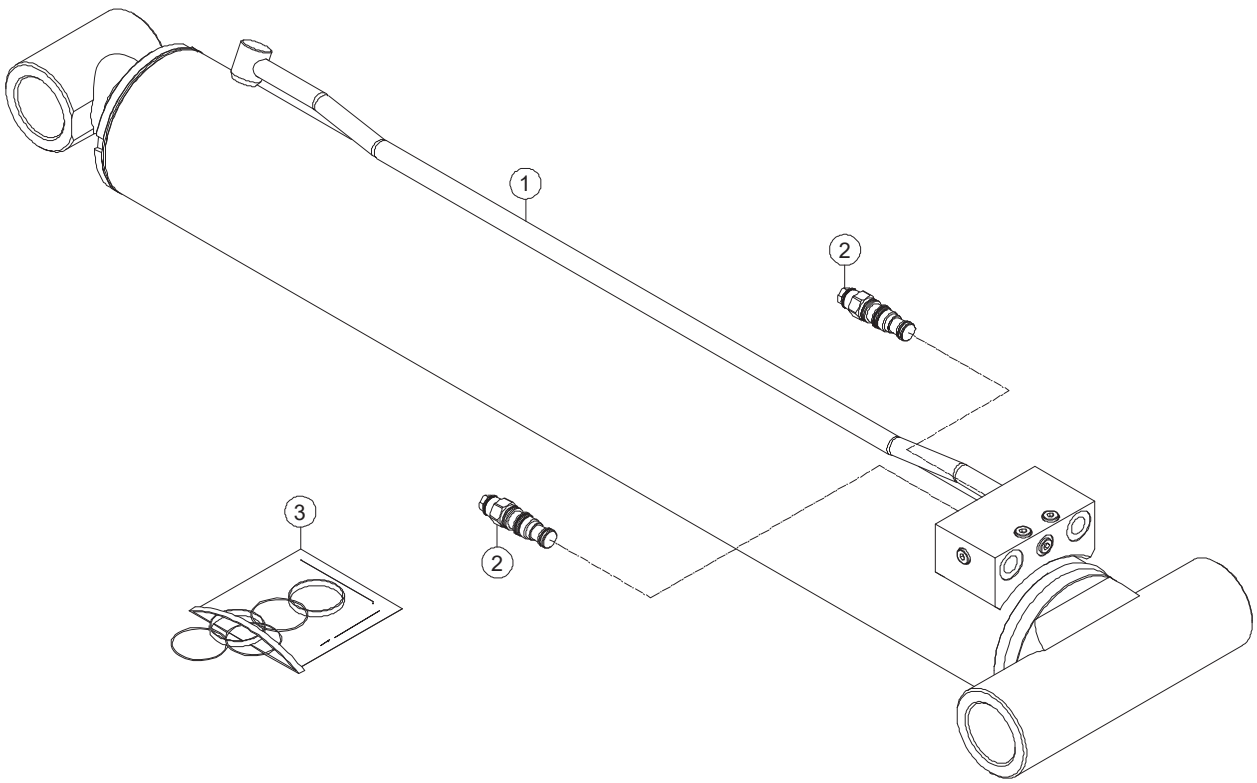

ILLUSTRATION No. ART_6307 60-J, 65-J Lower Lifting Cylinder Assembly

Item	Part Number	Description	Qty.
1	48885	Lower Lifting Cylinder Assembly	1
2	48886	Cartridge, Counterbalance	2
3	48887	Seal Kit 125/63	1

Lifting Cylinder Assembly

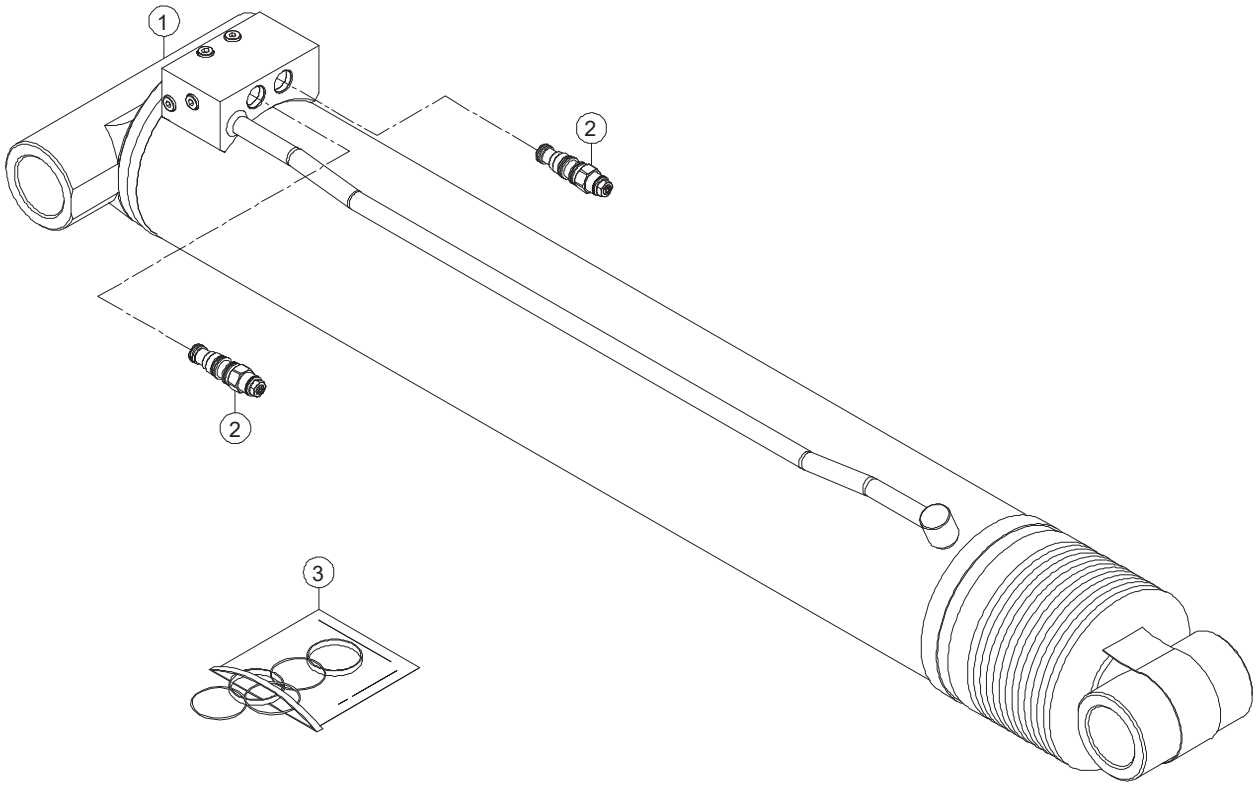

ILLUSTRATION No. ART_6308 60-J, 65-J Lifting Cylinder Assembly

Item	Part Number	Description	Qty.
1	48888	Lifting Cylinder Assembly	1
2	48886	Cartridge, Counterbalance	2
3	48889	Seal Kit 150/75	1

Telescopic Cylinder Assembly

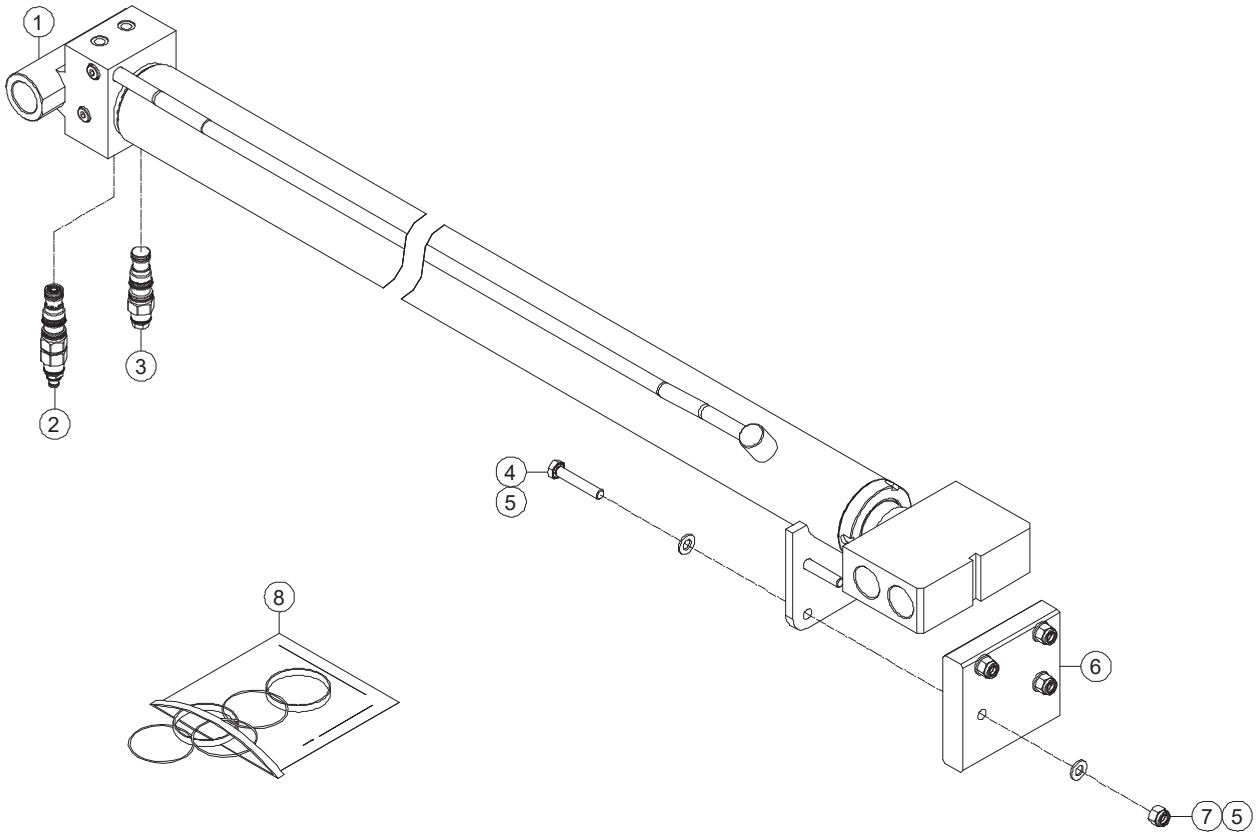

ILLUSTRATION No. ART_6309

60-J, 65-J

Telescopic Cylinder Assembly

Item	Part Number	Description	Qty.
1	48891	Telescopic Cylinder Assembly	1
2	48892	Cartridge, Counterbalance	1
3	48893	Cartridge, Counterbalance	1
4	50021	Screw HHCS M10-1.50 × 55 ZP	4
5	50002	WSHR M10 Standard Flat Washer ZP	8
6	48894	Sliding Block	1
7	50049	Nut NNYL M10-1.50 ZP	4
8	48895	Seal Kit 70/50	1

Jib Leveling Cylinder Assembly

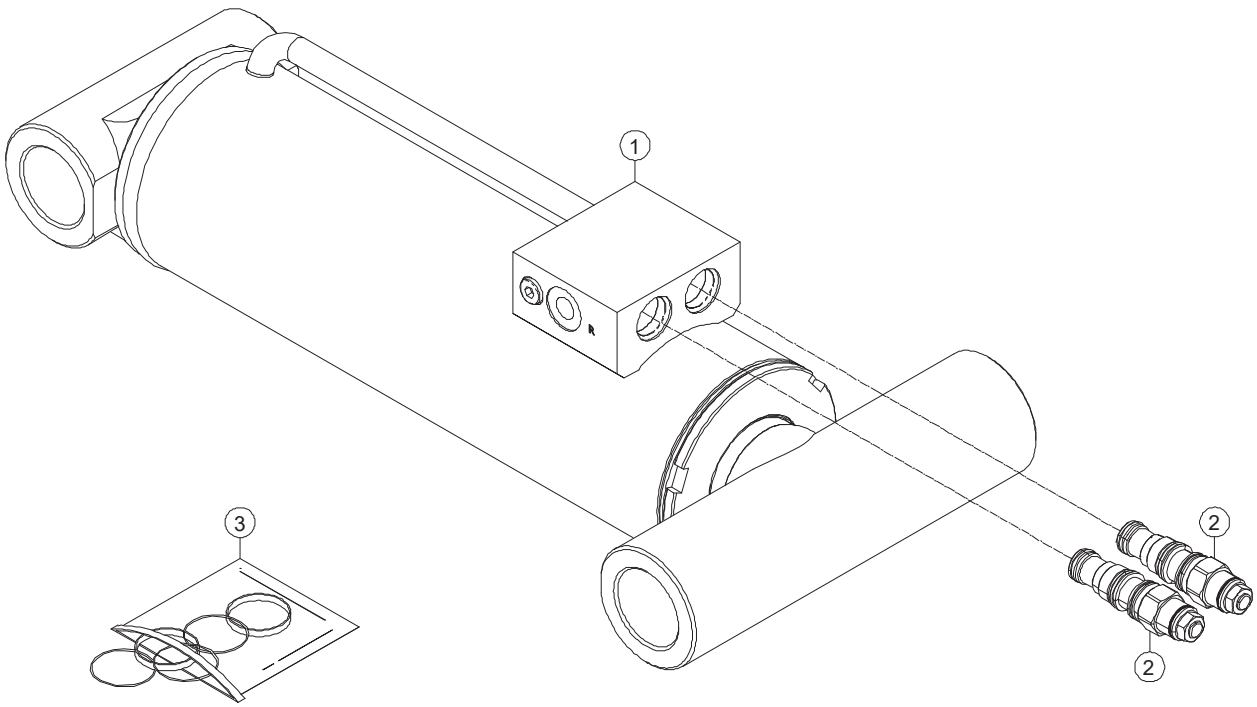

ILLUSTRATION No.
ART_6310

60-J, 65-J

Jib Leveling Cylinder Assembly

Item	Part Number	Description	Qty.
1	48896	Jib Leveling Cylinder Assembly	1
2	48897	Cartridge, Counterbalance	2
3	48898	Seal Kit 100/63	1

Jib Lifting Cylinder Assembly

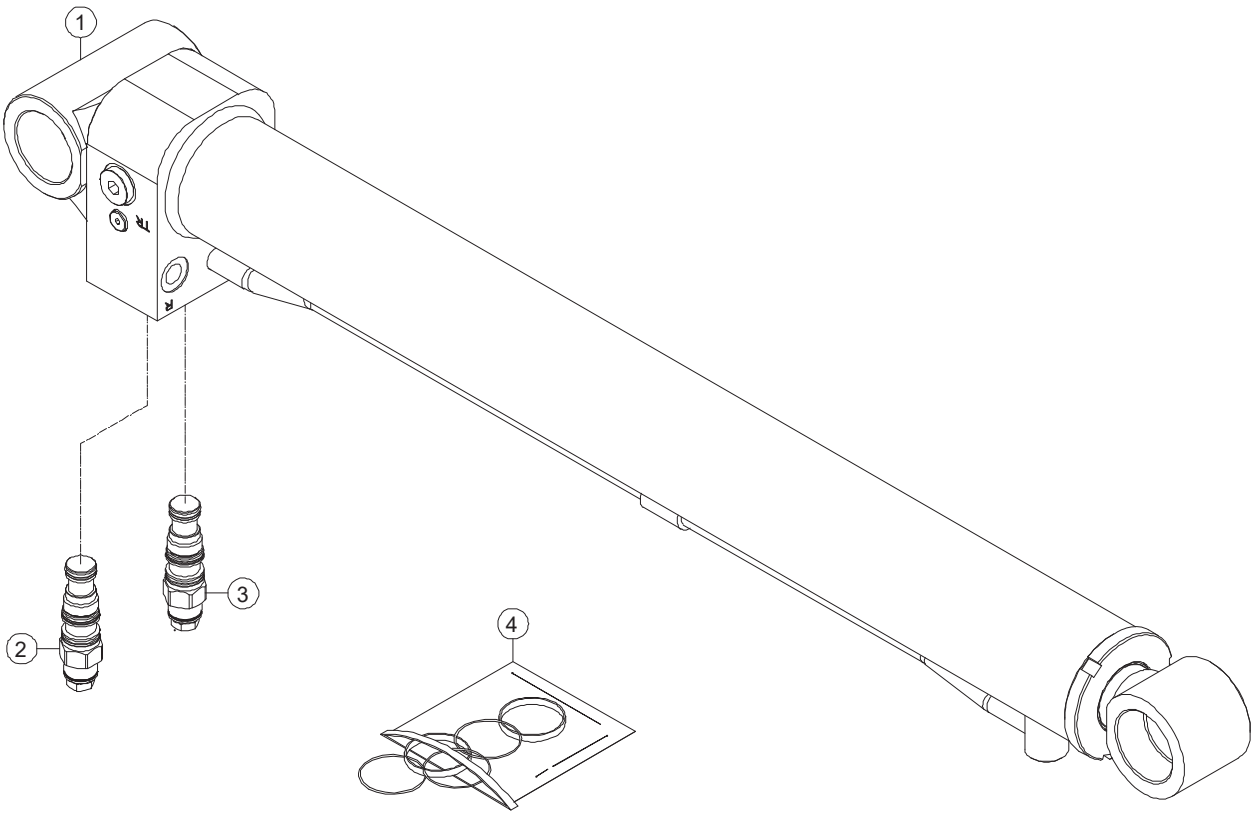

ILLUSTRATION No.
ART_6311

60-J, 65-J

Jib Lifting Cylinder Assembly

Item	Part Number	Description	Qty.
1	48899	Jib Lifting Cylinder Assembly	1
2	48900	Cartridge, Counterbalance	1
3	48901	Cartridge, Counterbalance	1
4	48902	Seal Kit 65/40	1

Chassis Circuit

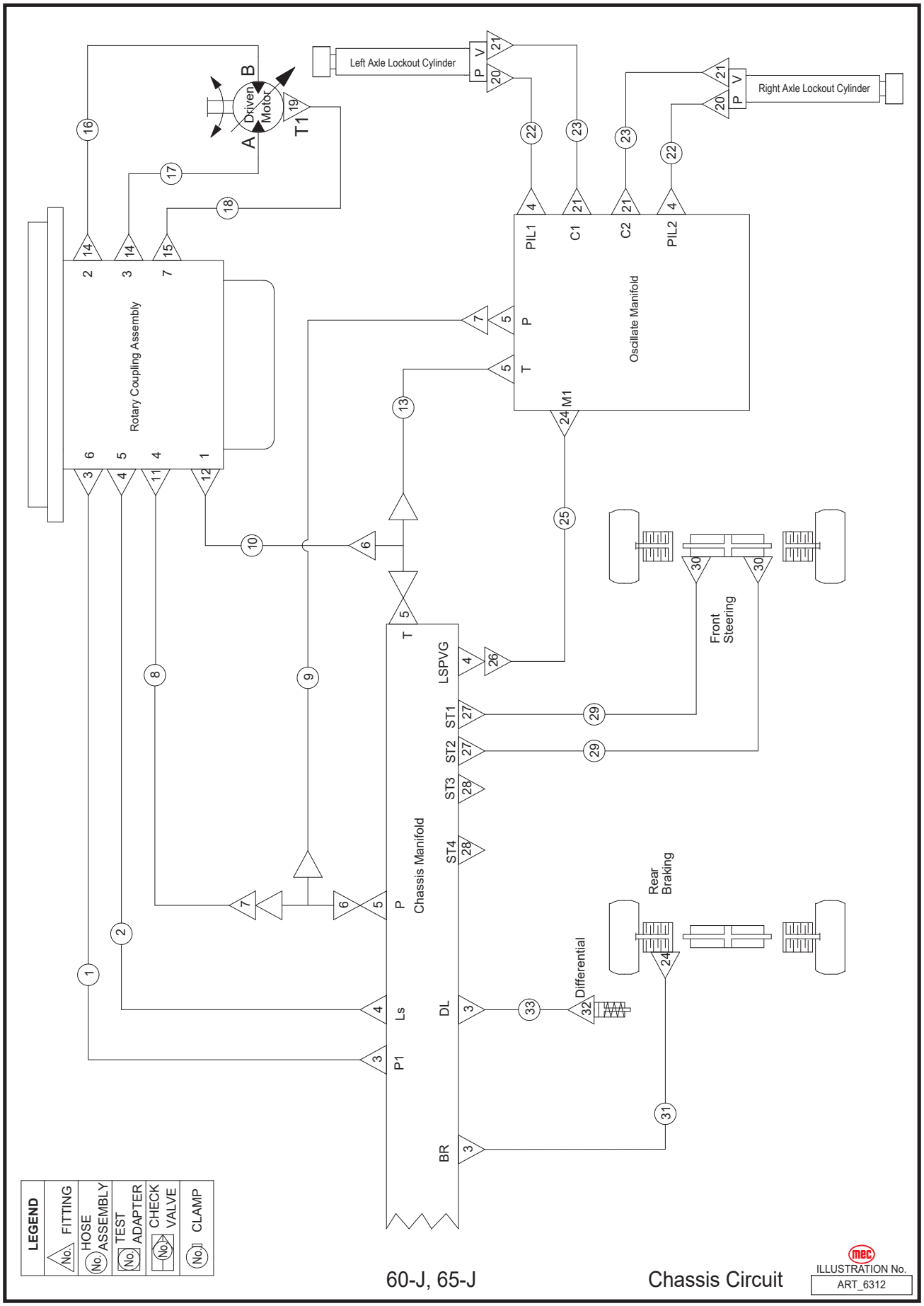

Item	Part Number	Description	Qty.
1	48903	Hose Assembly	1
2	48904	Hose Assembly	1
3	41296	Fitting, Straight	4
4	46792	Fitting, Straight	5
5	45519	Fitting, Straight	4
6	43117	Fitting, Tee	2
7	43206	Fitting, 90°	2
8	42728	Hose Assembly	1
9	48905	Hose Assembly	1
10	48906	Hose Assembly	1
11	45529	Fitting, Straight	1
12	43576	Fitting, Straight	1
13	48907	Hose Assembly	1
14	48908	Fitting, Straight	2
15	45530	Fitting, Straight	1
16	48909	Hose Assembly	1
--	45533	Flange Fitting	2
--	50003	WSHR M12 Standard Flat Washer ZP	4
--	53148	WSHR M12 Spring Washer ZP	4
--	53247	Screw HHCS M12-1.75 × 40 ZP	4
17	48910	Hose Assembly	1
--	45533	Flange Fitting	2
--	50003	WSHR M12 Standard Flat Washer ZP	4
--	53148	WSHR M12 Spring Washer ZP	4
--	53247	Screw HHCS M12-1.75 × 40 ZP	4
18	48911	Hose Assembly	1
19	43083	Fitting, Straight	1
20	48912	Fitting, Straight	2
21	48913	Fitting, Straight	4
22	48914	Hose Assembly	2
23	48915	Hose Assembly	2
24	43076	Fitting, Straight	2
25	48916	Hose Assembly	1
26	43077	Fitting, 90°	1
27	45547	Fitting, Straight	2
28	41087	Plug	2
29	48917	Hose Assembly	1
30	43638	Fitting, Straight	2
31	48918	Hose Assembly	1
32	48919	Fitting, Straight	1
33	48920	Hose Assembly	1

Turntable Circuit

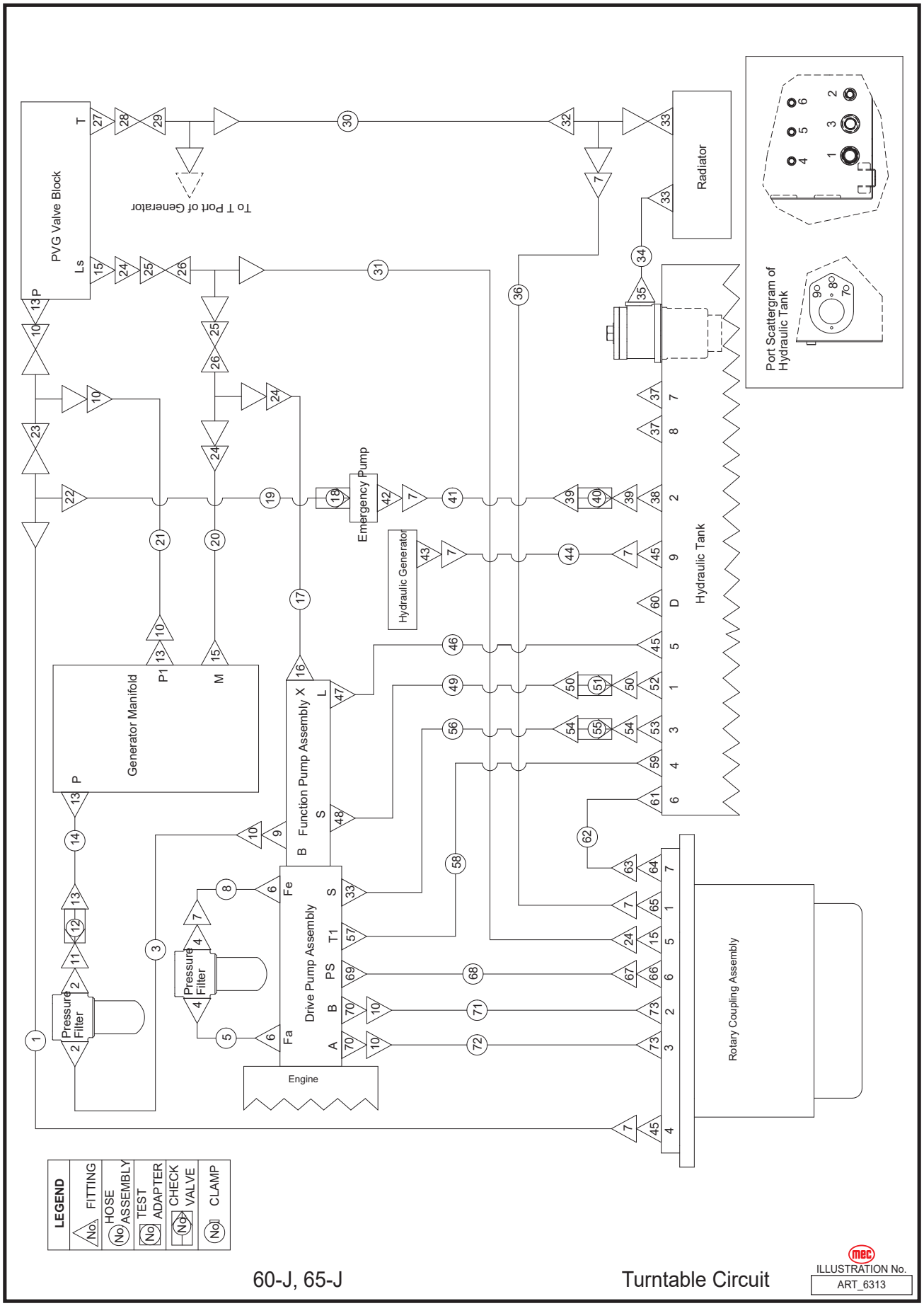

60-J, 65-J Turntable Circuit

ILLUSTRATION No.
ART_6313

Item	Part Number	Description	Qty.
1	48921	Hose Assembly	1
2	45556	Fitting, Straight	2
3	48922	Hose Assembly	1
4	48923	Fitting, Straight	2
5	48924	Hose Assembly	1
6	43582	Fitting, Straight	2
7	43206	Fitting, 90°	7
8	48925	Hose Assembly	1
9	48926	Fitting, Flange	1
--	45558	Flange Fitting	1
--	45559	O-Ring	1
--	50002	WSHR M10 Standard Flat Washer ZP	4
--	53054	WSHR M10 Spring Washer ZP	4
--	50034	ScrewHHCSM10-1.50×30ZP	4
10	43459	Fitting, 90°	6
11	45561	Fitting, Straight	1
12	45562	Check Valve	1
13	45563	Fitting, Straight	4
14	48927	Hose Assembly	1
15	46792	Fitting, Straight	2
16	47749	Fitting, Straight	1
17	48928	Hose Assembly	1
18	47759	Check Valve	1
19	48929	Hose Assembly	1
20	48930	Hose Assembly	1
21	48931	Hose Assembly	1
22	45566	Fitting, Tee	1
23	45565	Fitting, Tee	1
24	43077	Fitting, 90°	4
25	45473	Fitting, Straight	2
26	45468	Fitting, Tee, Shuttle Valve	2
27	45474	Fitting, Straight	1
28	43112	Fitting, 90°	1
29	43115	Fitting, Tee	1
30	48932	Hose Assembly	1
31	48933	Hose Assembly	1
32	48934	Fitting, Tee	1
33	43085	Fitting, Straight	3
34	48935	Hose Assembly	1
35	45525	Fitting, Straight	1
36	48936	Hose Assembly	1
37	47693	Tank Plug	2
38	45528	Fitting, Straight	1
39	45537	Fitting, Straight	2
40	45539	Valve, Ball	1

41	48937	Hose Assembly	1
42	45519	Fitting, Straight	1
43	45567	Fitting, Straight	1
44	48938	Hose Assembly	1
45	45529	Fitting, Straight	3
46	48939	Hose Assembly	1
47	48940	Fitting, Straight	1
48	48941	Fitting, 90°, Fitting, Flange	1
--	48274	Flange Fitting	1
--	50002	WSHR M10 Standard Flat Washer ZP	4
--	53054	WSHR M10 Spring Washer ZP	4
--	50034	Screw HHCS M10-1.50 × 30 ZP	4
49	48942	Hose Assembly	1
50	45569	Fitting, Straight	2
51	45570	Valve, Ball	1
52	45568	Fitting, Straight	1
53	45575	Fitting, Straight	1
54	45573	Fitting, Straight	2
55	45574	Valve, Ball	1
56	48943	Hose Assembly	1
57	48944	Fitting, Straight	1
58	48945	Hose Assembly	1
59	45578	Fitting, Straight	1
60	47766	Plug	1
61	45593	Fitting, Straight	1
62	48946	Hose Assembly	1
63	43082	Fitting, 90°	1
64	45530	Fitting, Straight	1
65	43576	Fitting, Straight	1
66	41296	Fitting, Straight	1
67	43639	Fitting, 90°	1
68	48947	Hose Assembly	1
69	41298	Fitting, Straight	1
70	48948	Flange Fitting	2
--	48949	Flat, Flange	4
--	50003	WSHR M12 Standard Flat Washer ZP	8
--	53148	WSHR M12 Spring Washer ZP	8
--	50040	Screw HHCS M12-1.75 × 35 ZP	8
71	48950	Hose Assembly	1
72	48951	Hose Assembly	1
73	48908	Fitting, Straight	2

THIS PAGE HAS BEEN INTENTIONALLY LEFT BLANK.

Telescopic Boom Circuit

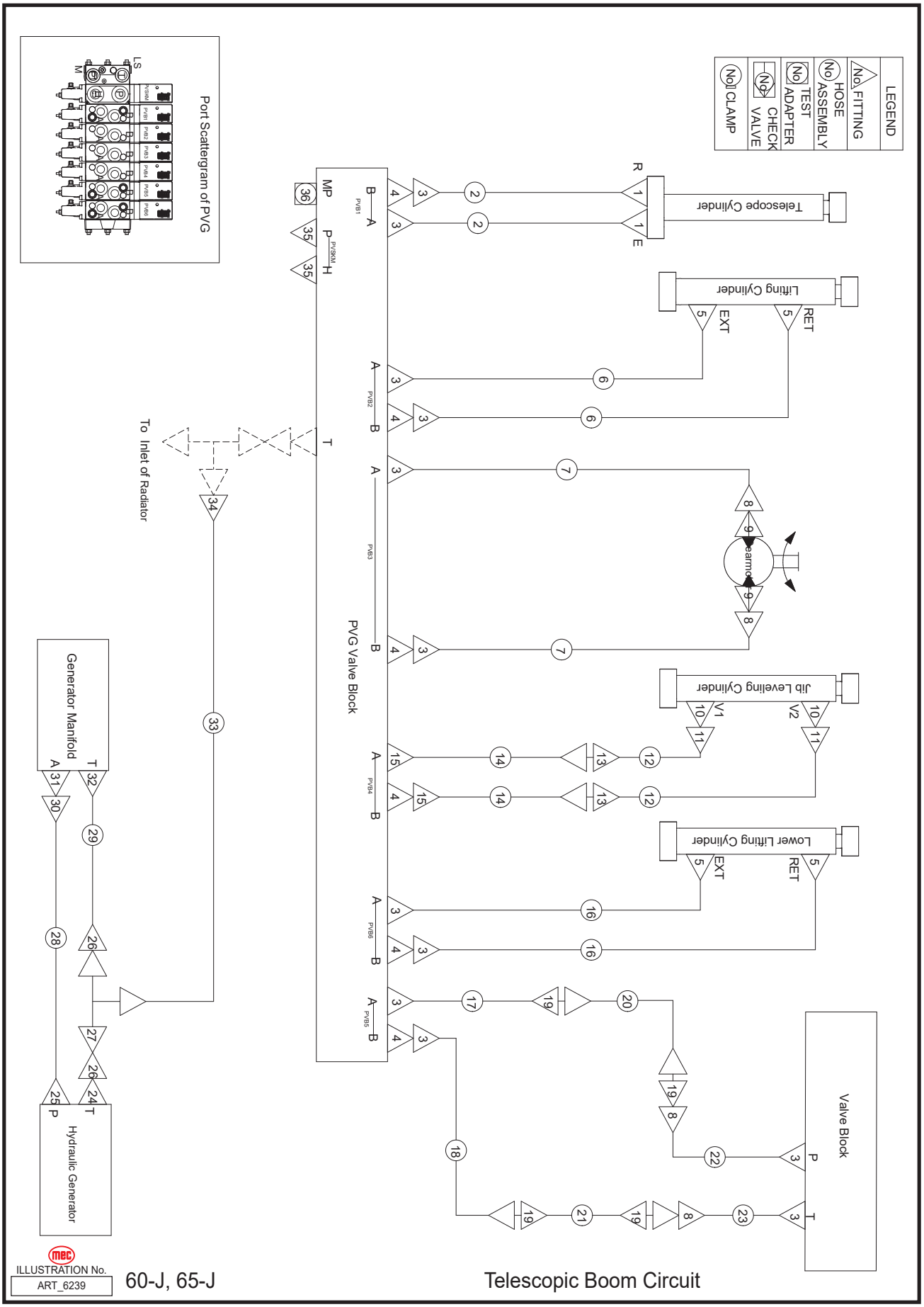

Item	Part Number	Description	Qty.
1	48952	Fitting, Straight	2
2	48953	Hose Assembly	2
3	45593	Fitting, Straight	12
4	45589	Fitting, Straight	6
5	48954	Fitting, Straight	4
6	48955	Hose Assembly	2
7	48956	Hose Assembly	2
8	43082	Fitting, 90°	4
9	45547	Fitting, Straight	2
10	48957	Fitting, Straight	2
11	43639	Fitting, 90°	2
12	48959	Hose Assembly	2
13	48960	Fitting, Bulkhead, Straight	2
14	48961	Hose Assembly	2
15	48962	Fitting, Straight	2
16	48963	Hose Assembly	2
17	48964	Hose Assembly	1
18	48965	Hose Assembly	1
19	43680	Fitting, Bulkhead, Straight	4
20	48967	Hose Assembly	1
21	48969	Hose Assembly	1
22	48970	Hose Assembly	1
23	48971	Hose Assembly	1
24	43455	Fitting, Straight	1
25	48972	Fitting, Straight	1
26	43456	Fitting, 90°	2
27	45609	Fitting, Tee	1
28	48974	Hose Assembly	1
29	48975	Hose Assembly	1
30	43459	Fitting, 90°	1
31	45563	Fitting, Straight	1
32	45613	Fitting, Straight	1
33	48976	Hose Assembly	1
34	45614	Fitting, Straight	1
35	45615	Plug	2
36	45616	Test Adapter	1

Jib Circuit

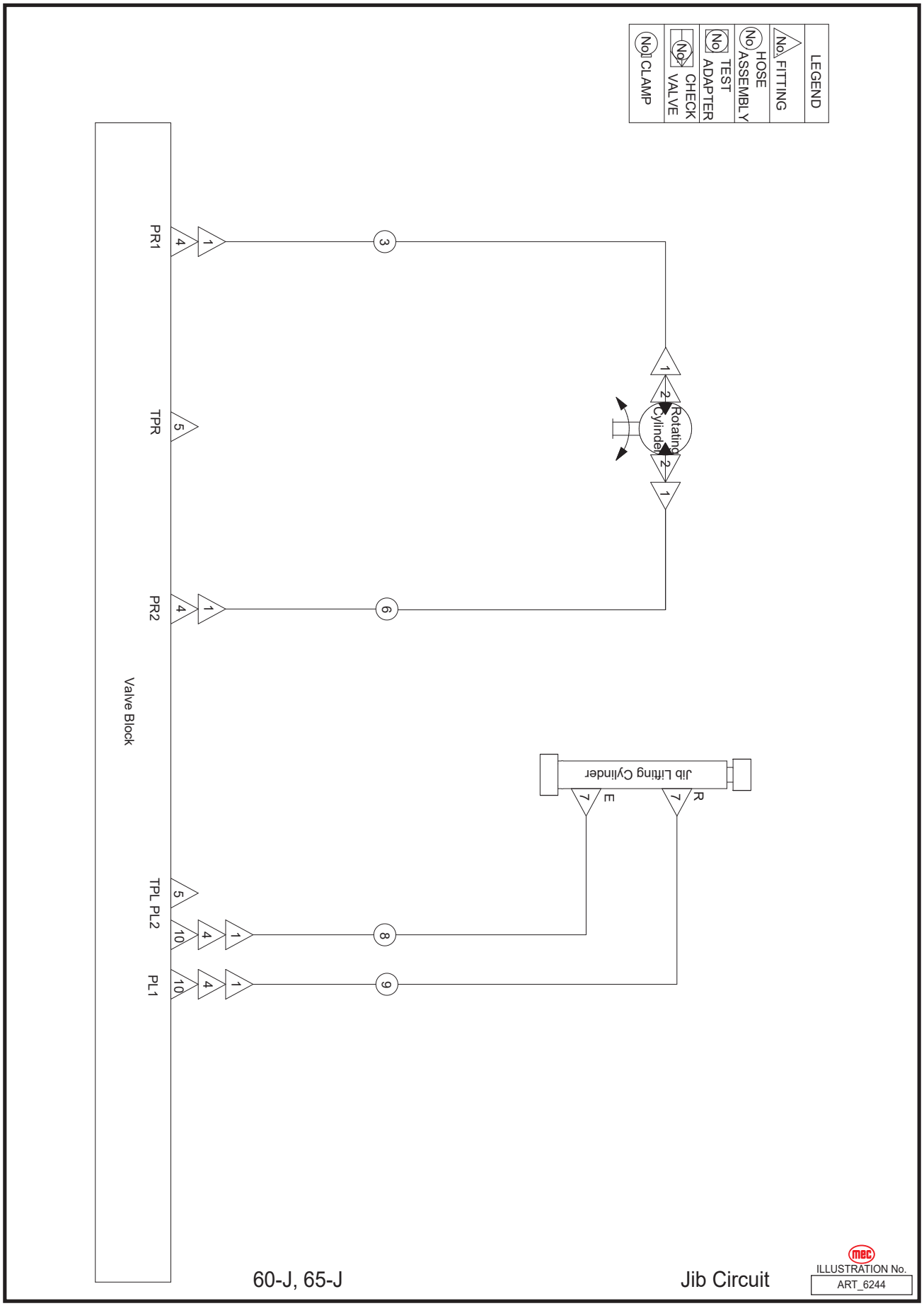
LEGEND
No. FITTING
No. HOSE ASSEMBLY
No. TEST ADAPTER
No. CHECK VALVE
No. CLAMP
PR1
TPR
PR2
TPL PL2
PL1
Valve Block
Rotating Cylinder
Jib Lifting Cylinder
E
R
60-J, 65-J
Jib Circuit
ILLUSTRATION No.
ART_6244

Item	Part Number	Description	Qty.
1	43639	Fitting, 90°	6
2	47749	Fitting, Straight	2
3	47751	Hose Assembly	1
4	41296	Fitting, Straight	4
5	46869	Plug	2
6	47756	Hose Assembly	1
7	41298	Fitting, Straight	2
8	47878	Hose Assembly	1
9	47769	Hose Assembly	1
10	47896	Fitting, Straight	2

Kubota Engine Electrical Harness, Part 1

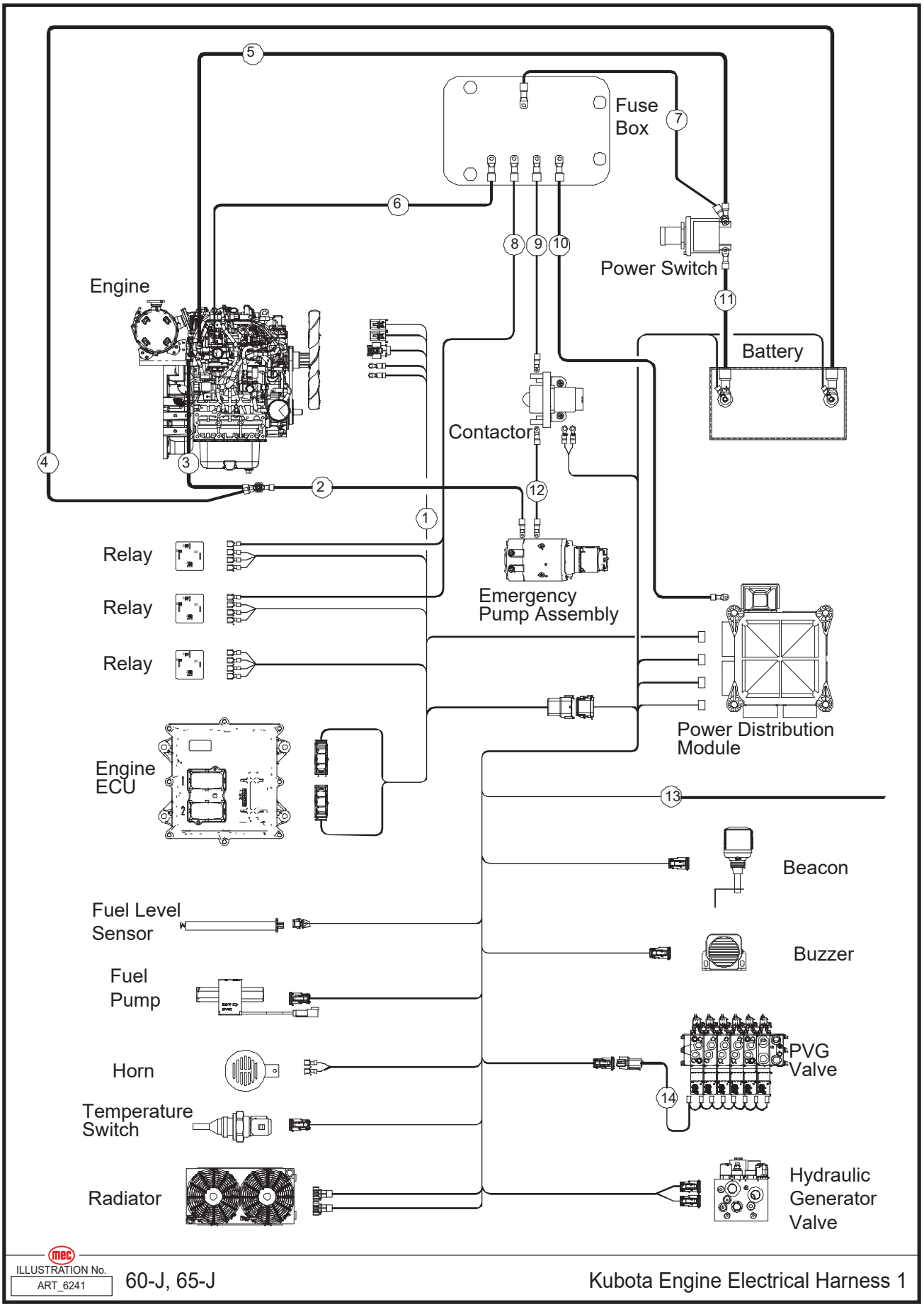

ILLUSTRATION No. ART_6241

60-J, 65-J

Kubota Engine Electrical Harness 1

Item	Part Number	Description	Qty.
1	48973	Engine Harness	1
2	48977	Emergency Pump Negative Harness	1
4	48979	12V Battery Negative Harness	1
5	48980	Start Motor Harness	1
6	48981	Alternator Harness	1
7	48982	Fuse Box Power Harness	1
8	48983	Preheat Contactor Harness	1
9	48984	Emergency Pump Contactor Harness	1
10	48985	Fuse Relay Box Power Harness	1
11	48986	12V Battery Positive Harness	1
12	48987	Emergency Power Positive Harness	1
13	48988	Control Cabin Harness	1
14	48989	PVG Harness	1

Kubota Engine Electrical Harness, Part 2

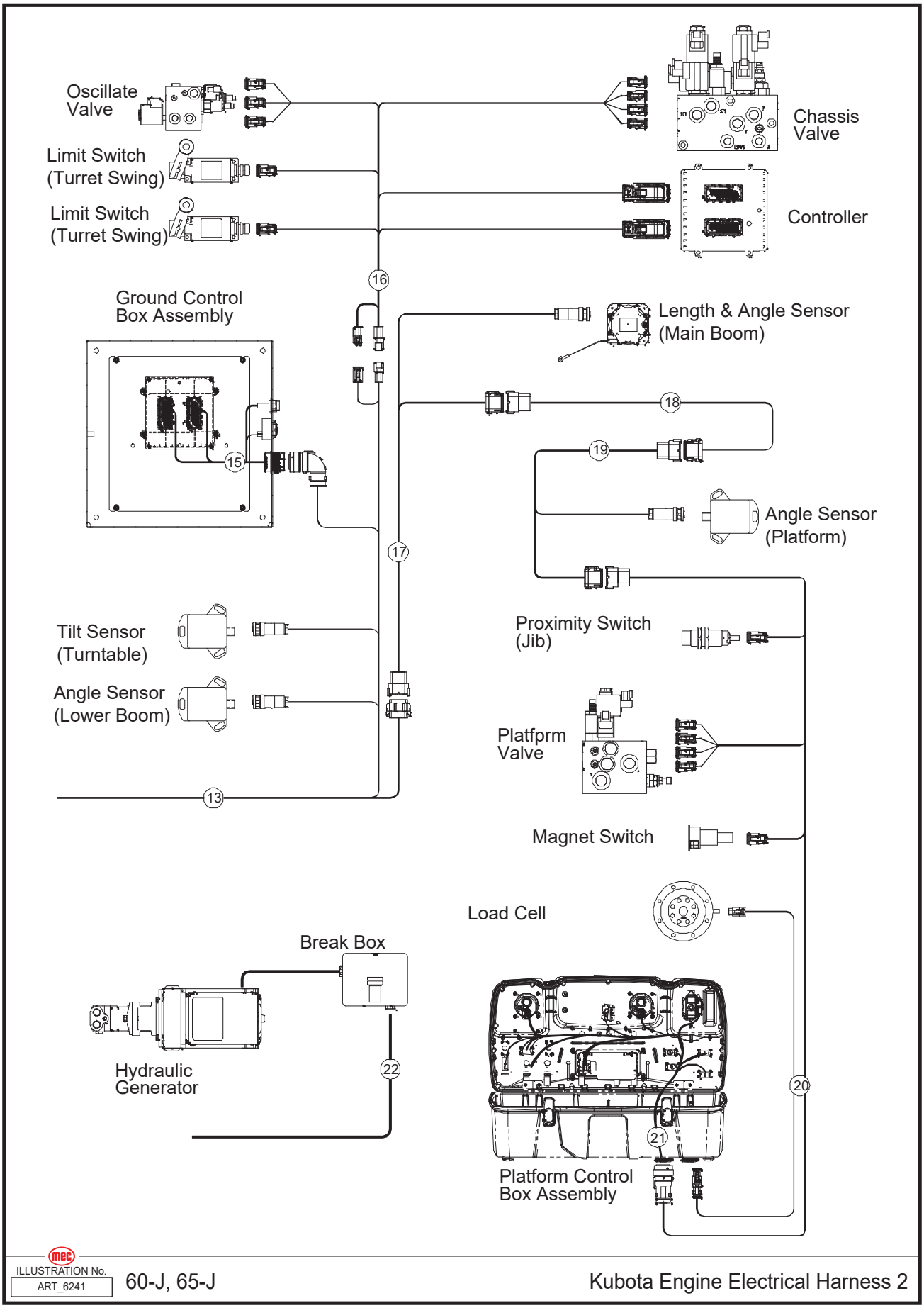

ILLUSTRATION No. ART_6241

60-J, 65-J

Kubota Engine Electrical Harness 2

Item	Part Number	Description	Qty.
13	48988	Control Cabin Harness	1
16	48991	Chassis Harness	1
17	48992	Lower Boom Harness	1
18	48993	Main Boom Harness	1
19	48995	Jib Harness	1
20	48996	Platform Harness	1
21	48997	Platform Control Box Harness	1
22	48998	Welding Harness	1

Perkins Engine Electrical Harness, Part 1

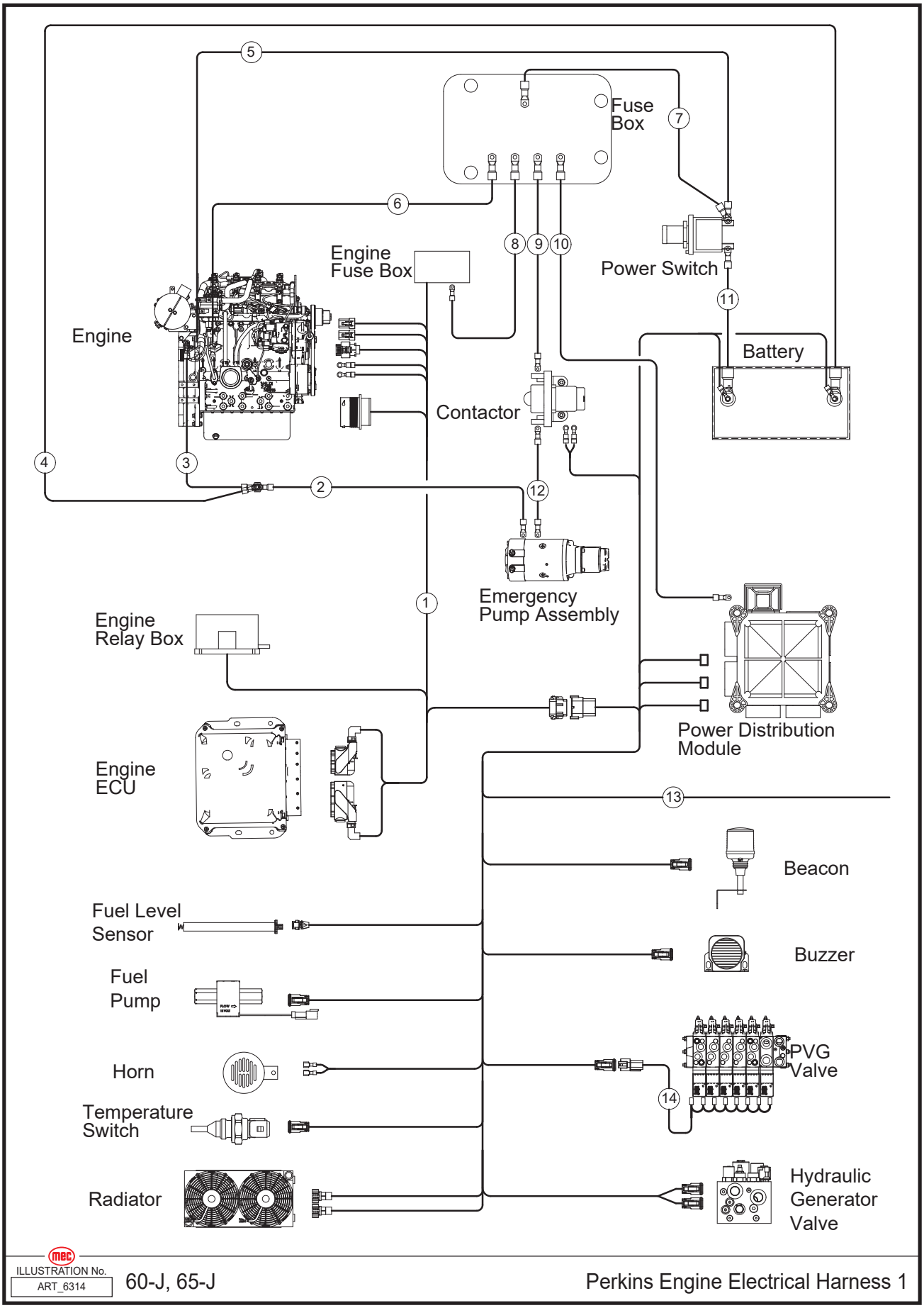

ILLUSTRATION No. ART_6314

60-J, 65-J

Perkins Engine Electrical Harness 1

Item	Part Number	Description	Qty.
1	49000	Engine Harness	1
2	48977	Emergency Pump Negative Harness	1
3	49001	Engine Negative Harness	1
4	48979	12V Battery Negative Harness	1
5	49002	Start Motor Harness	1
6	48981	Alternator Harness	1
7	48982	Fuse Box Power Harness	1
8	49003	Preheat Contactor Harness	1
9	48984	Emergency Pump Contactor Harness	1
10	48985	Fuse Relay Box Power Harness	1
11	48986	12V Battery Positive Harness	1
12	48987	Emergency Power Positive Harness	1
13	49004	Control Cabin Harness	1
14	48989	PVG Harness	1

Perkins Engine Electrical Harness, Part 2

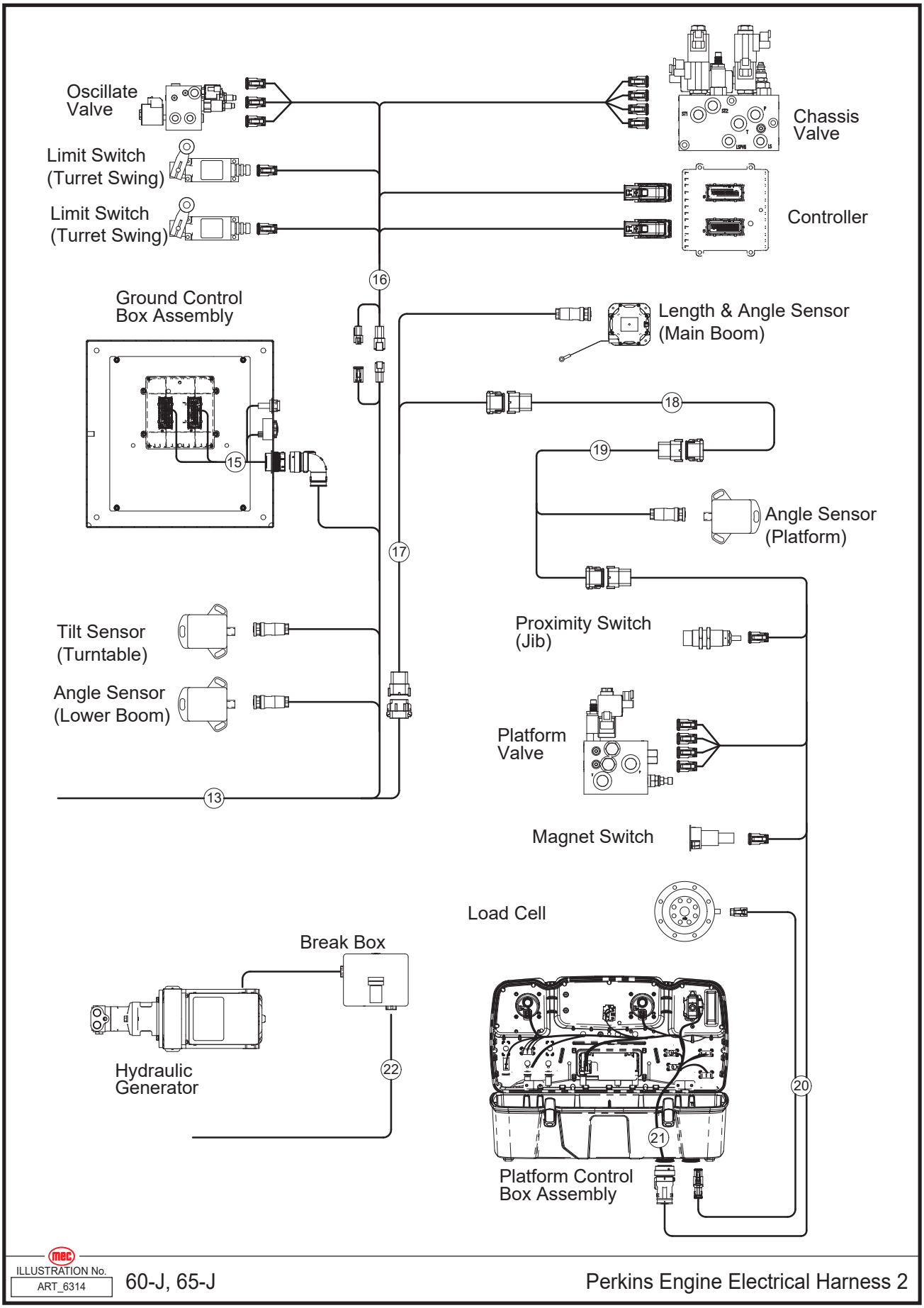

ILLUSTRATION No. ART_6314

60-J, 65-J

Perkins Engine Electrical Harness 2

Item	Part Number	Description	Qty.
13	49004	Control Cabin Harness	1
16	48991	Chassis Harness	1
17	48992	Lower Boom Harness	1
18	48993	Main Boom Harness	1
19	48995	Jib Harness	1
20	48996	Platform Harness	1
21	48997	Platform Control Box Harness	1
22	48998	Welding Harness	1

Power Distribution Module

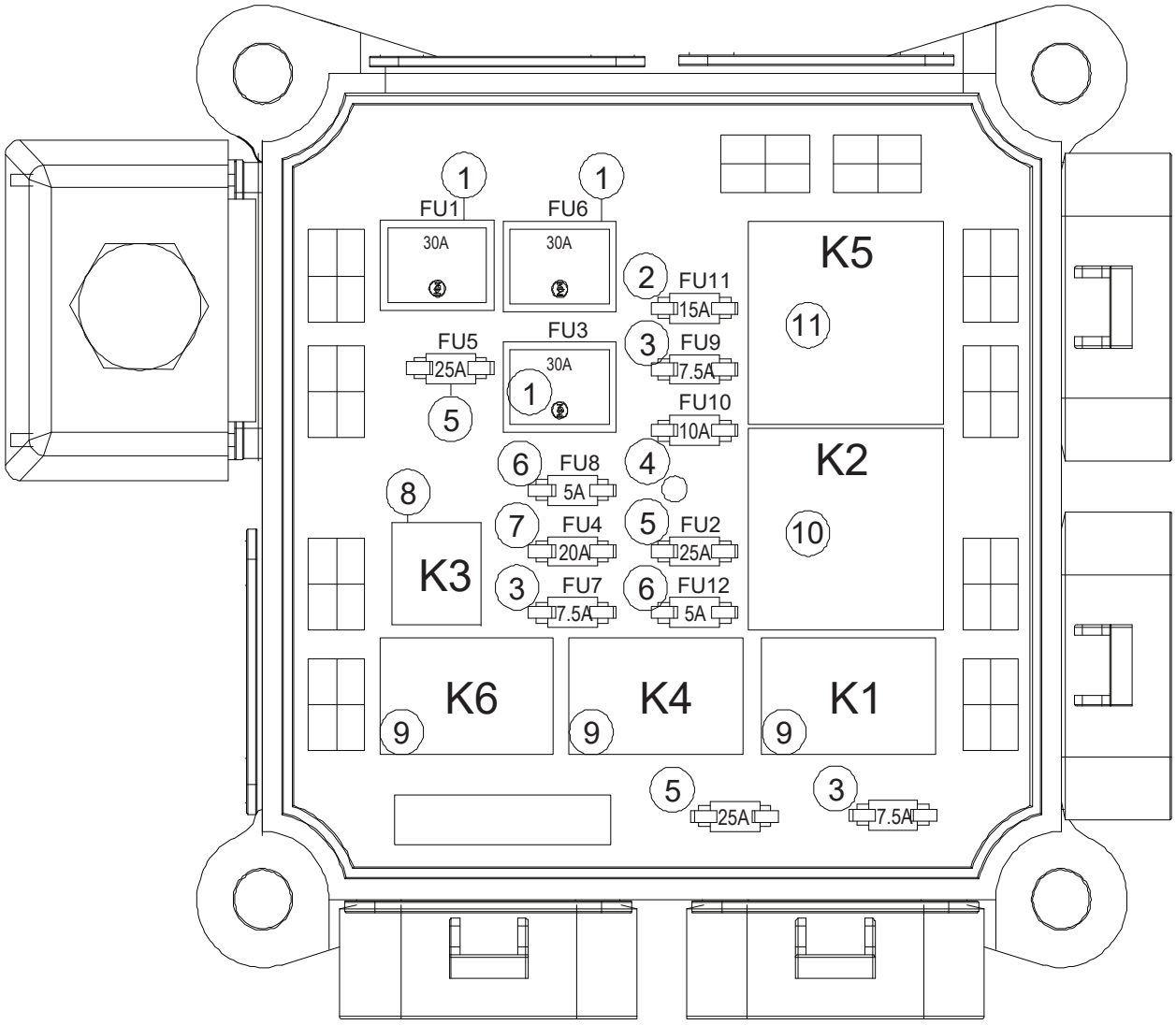

ILLUSTRATION No. ART_6173 85-J Power Distribution Module

Item	Part Number	Description	Qty.
1	48137	Fuse 30 Amp	3
2	48138	Fuse 15 Amp	1
3	48139	Fuse 7.5 Amp	3
4	48140	Fuse 10 Amp	1
5	48141	Fuse 25 Amp	2
6	48142	Fuse 5 Amp	2
7	48143	Fuse 20 Amp	1
8	48144	Relay	1
9	48145	Relay	3
10	48146	Relay	1
11	48147	Relay	1

Ground Control Box Assembly

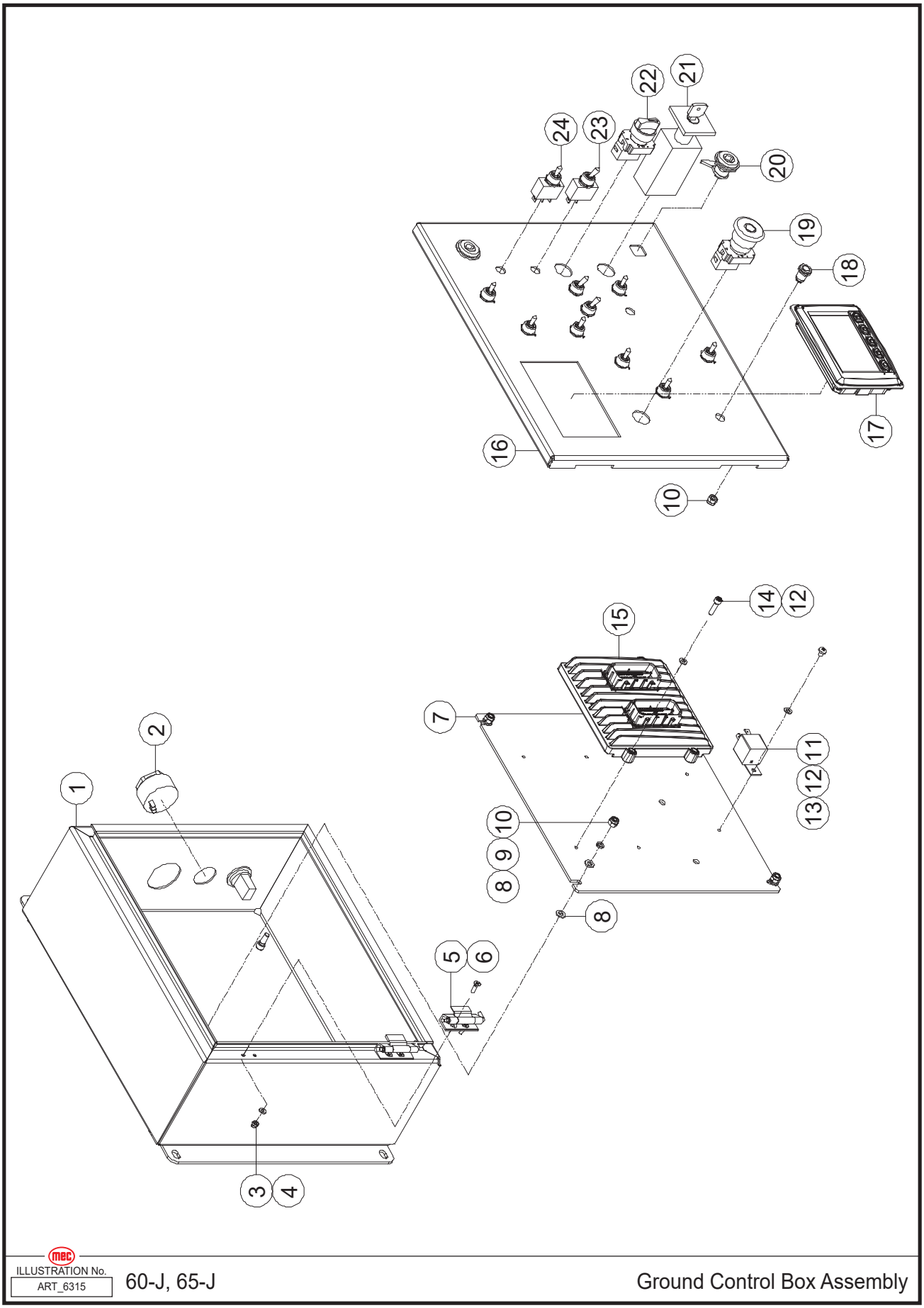

ILLUSTRATION No. ART_6315

60-J, 65-J

Ground Control Box Assembly

Item	Part Number	Description	Qty.
--	49365	Complete Lower Control Box Assembly	--
1	49005	Box	1
2	48160	Alarm	1
3	50285	Nut NNYL M04-0.70 ZP	4
4	50284	WSHR M04 Standard Flat Washer ZP	4
5	46916	Rack, Gemel	2
6	53575	Screw CSCS M04-0.70 × 14 ZP	4
7	48149	Bracket	1
8	50000	WSHR M06 Standard Flat Washer ZP	8
9	53046	WSHR M06 Spring Washer ZP	4
10	50047	Nut NNYL M06-1.00 ZP	6
11	42342	Relay	1
12	53038	WSHR M05 Standard Flat Washer ZP	2
13	53383	Screw PHMS M05-0.80 × 6 ZP	1
14	53150	Screw SHCS M05-0.80 × 20 ZP	1
15	49006	Controller	1
16	49007	Electric Control Box Cover	1
17	48159	Display	1
18	48152	Indicator	1
19	41422	Emergency Stop Switch	1
--	43097	Base With 1 NC Contact	1
--	43098	Red Mushroom Head	1
20	42352	Lock, Column	2
21	48155	Key switch	1
22	46582	Select Switch	1
--	43994	Base With 1 NO Contact	1
--	48156	Select Switch Head	1
23	48163	Switch, Toggle	3
24	48151	Switch, Toggle	8

Platform Control Box Assembly

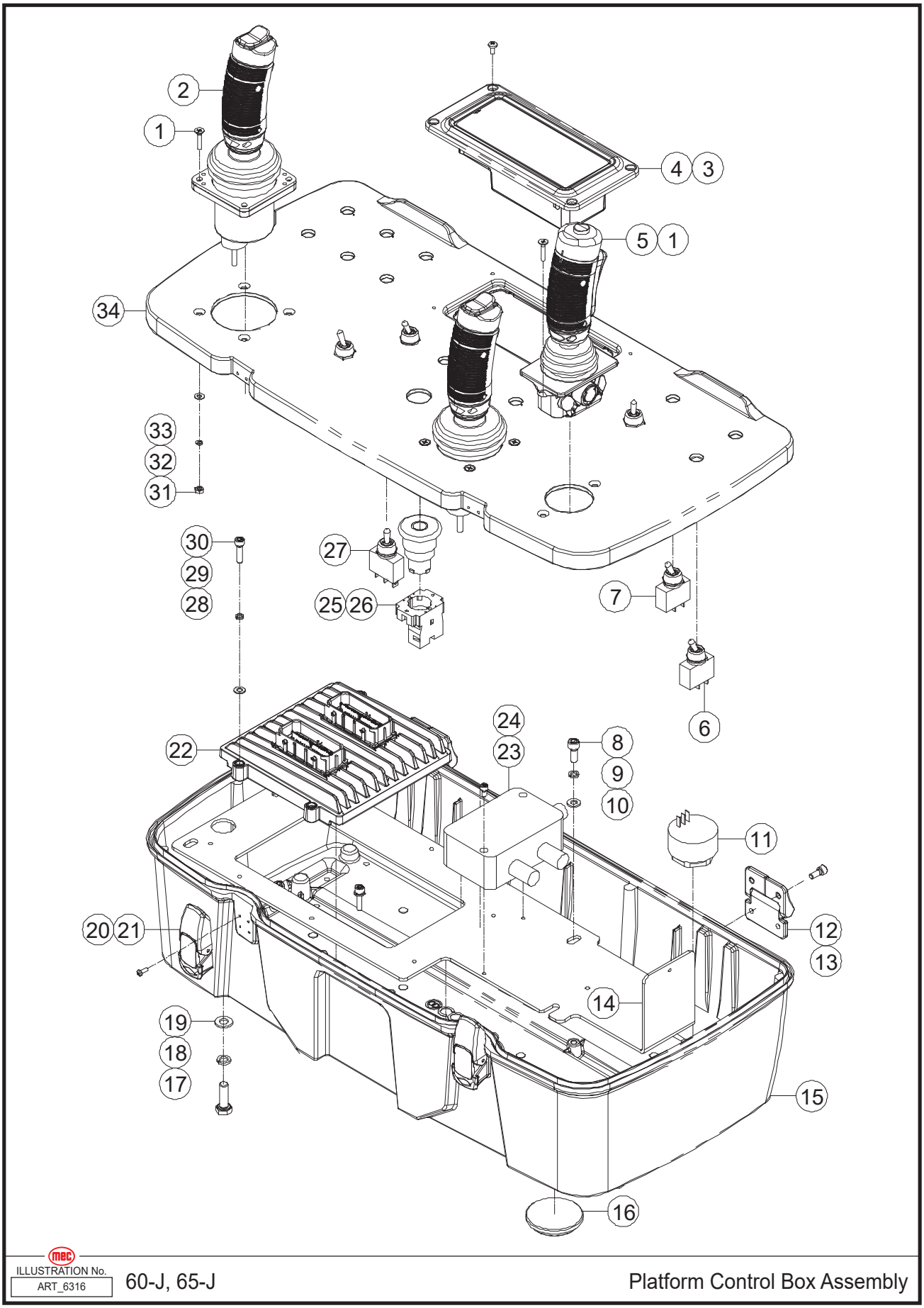

ILLUSTRATION No. ART_6316

60-J, 65-J

Platform Control Box Assembly

Item	Part Number	Description	Qty.
--	49364	Complete Upper Control Box Assembly	--
1	53489	Screw CSCS M04-0.70 × 20 ZP	10
2	48175	Joystick, Dual axle	2
3	53276	Screw PHMS M04-0.70 × 8 ZP	4
4	49008	LED Panel	1
5	48161	Joystick, Steer &Drive	1
6	48153	Switch, Toggle	3
7	48163	Switch, Toggle	6
8	53138	Screw SHCS M06-1.00 × 16 ZP	5
9	53046	WSHR M06 Spring Washer ZP	5
10	50000	WSHR M06 Standard Flat Washer ZP	5
11	48160	Alarm	1
12	48164	Hinge	2
13	53116	Screw SHCS M05-0.80 × 12 ZP	8
14	48165	Bracket	1
15	49009	Platform Control Box	1
16	48169	Plug	1
17	50031	Screw HHCS M08-1.25 × 25 ZP	4
18	53055	WSHR M08 Spring Washer ZP	4
19	50001	WSHR M08 Standard Flat Washer ZP	4
20	53093	Screw PHMS M03-0.50 × 8 ZP	12
21	48170	Latch	2
22	49010	Controller	1
23	48172	Load Sensor Amplifier	1
24	53389	Screw SHCS M04-0.70 × 8 ZP	2
25	43098	Red Mushroom Head	1
26	43097	Base With 1 NC Contact	1
27	48151	Switch, Toggle	2
28	53038	WSHR M05 Standard Flat Washer ZP	4
29	53043	WSHR M05 Spring Washer ZP	4
30	53150	Screw SHCS M05-0.80 × 20 ZP	4
31	53157	Nut NHEX M04-0.70 ZP	10
32	53062	WSHR M04 Spring Washer ZP	10
33	50284	WSHR M04 Standard Flat Washer ZP	10
34	49011	Cover, Platform Control Box	1

Decals

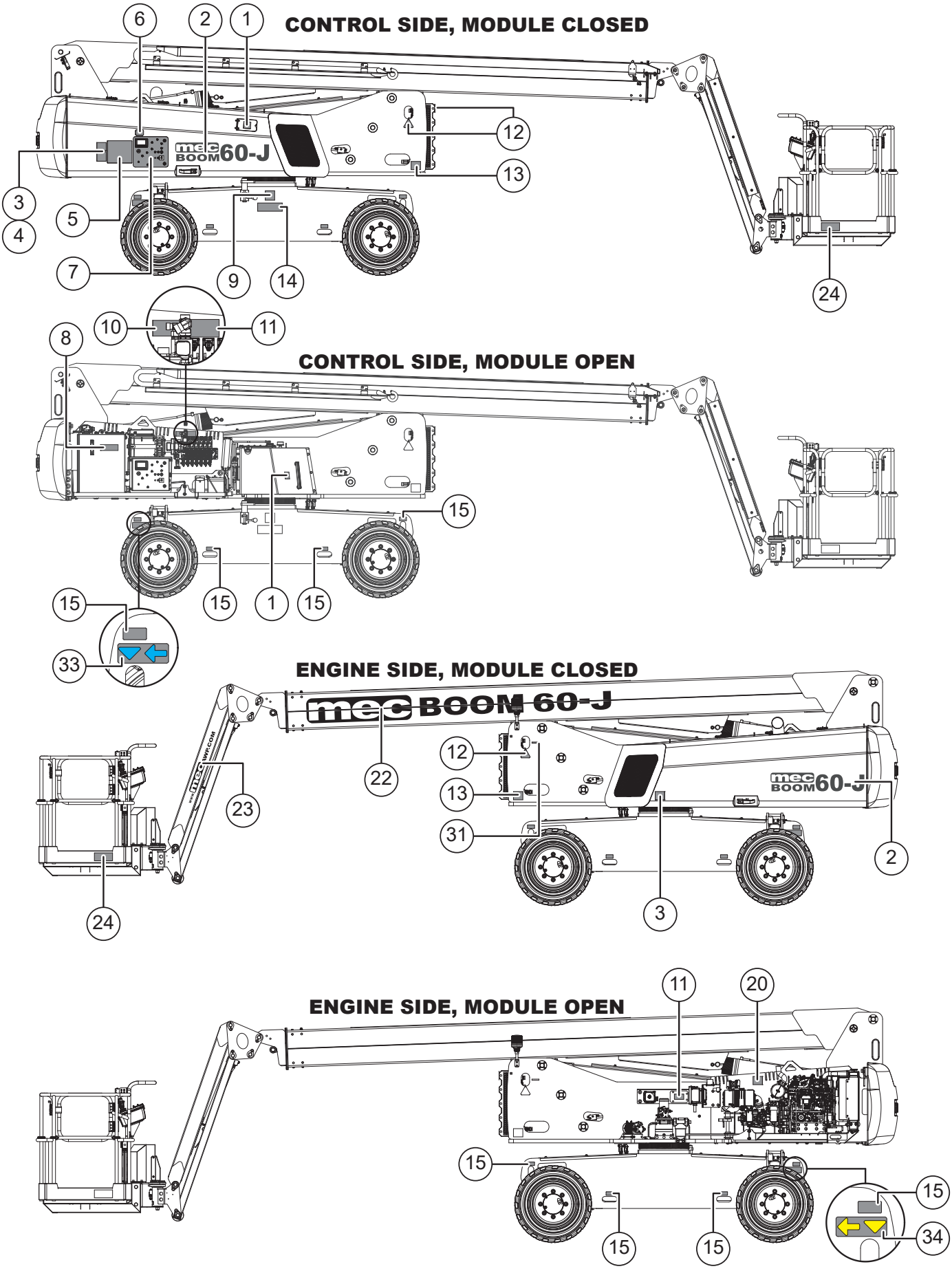
CONTROL SIDE, MODULE CLOSED
6
2
1
12
13
3
4
5
7
9
14
24
CONTROL SIDE, MODULE OPEN
10
11
8
15
15
15
1
15
15
33
ENGINE SIDE, MODULE CLOSED
BOOM 60-J
22
12
13
31
23
24
2
3
ENGINE SIDE, MODULE OPEN
11
20
15
15
15
15
15
34

FRONT VIEW

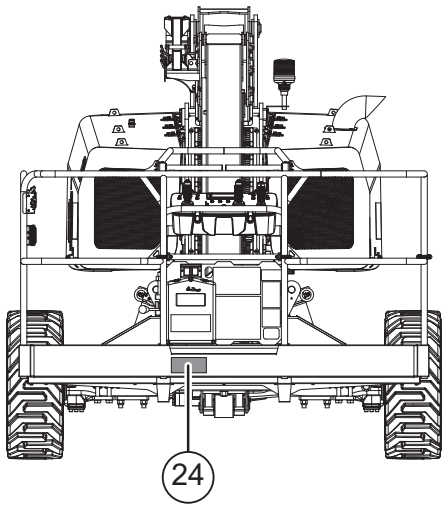

REAR VIEW

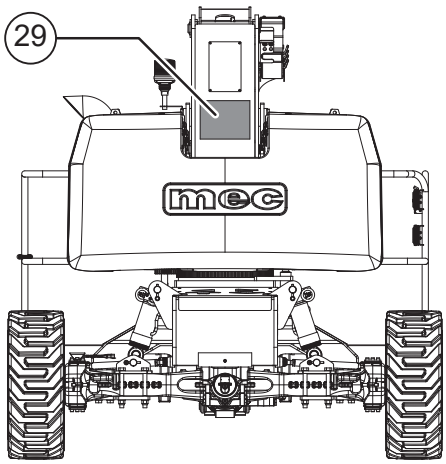

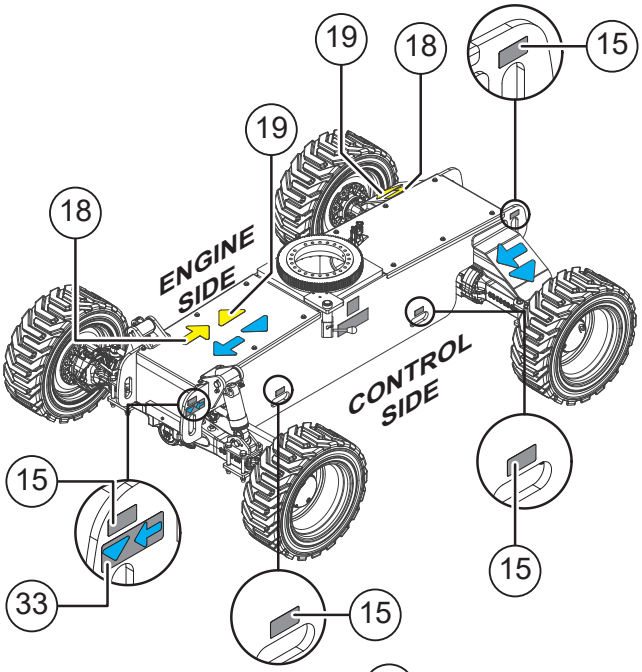

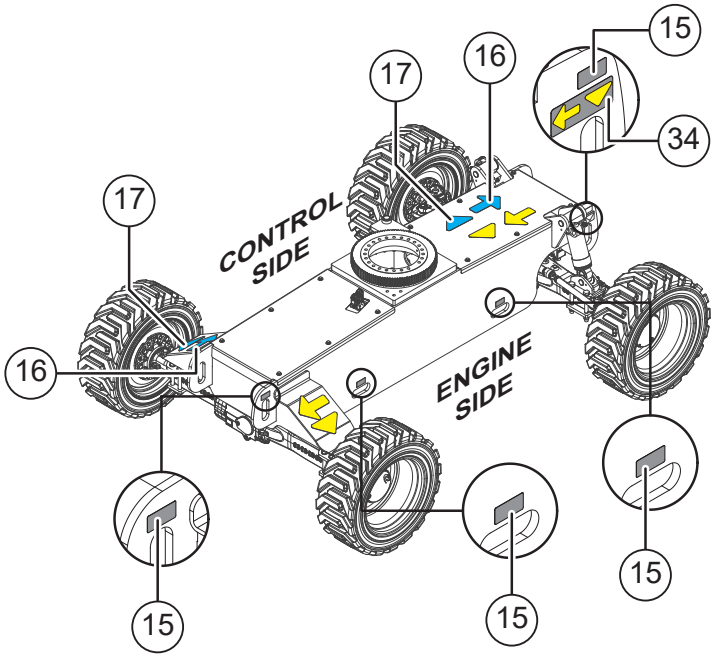

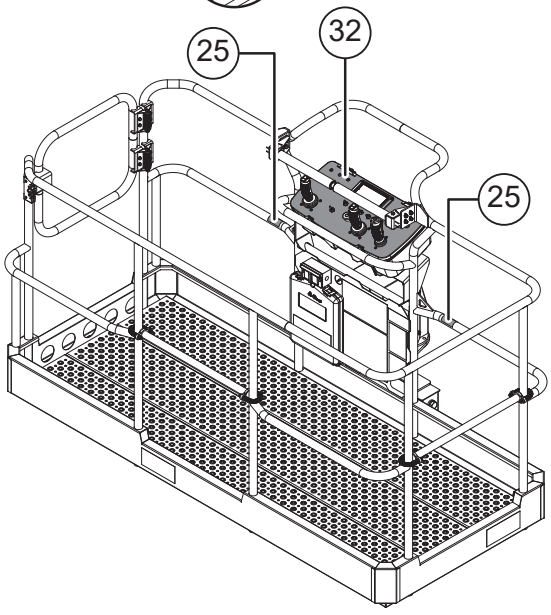

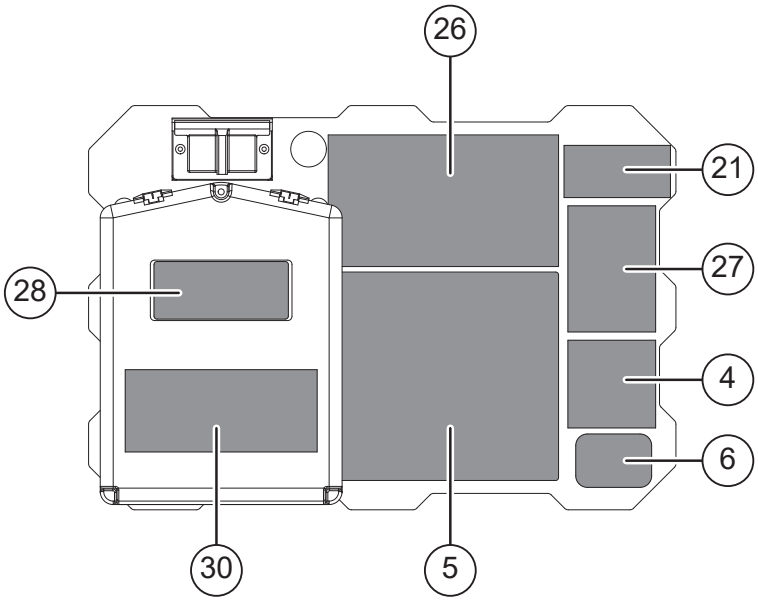

***INSIDE THE MANUAL CASE**

1  93182 Qty. - 2	2  93745 Qty. - 2	3  93801 Qty. - 2	4 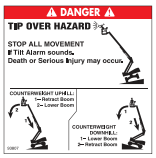 93807 Qty. - 2	5 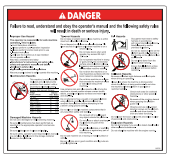 93755 Qty. - 2
6 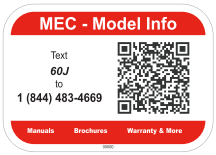 95268 Qty. - 2	7 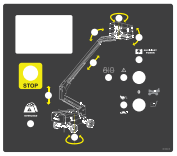 09120023.B Qty. - 1	8  92117 Qty. - 1	9 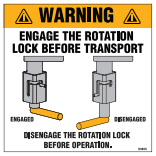 93855 Qty. - 1	10  90732 Qty. - 1
11  93805 Qty. - 2	12  91850 Qty. - 3	13  93804 Qty. - 2	14 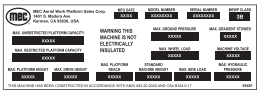 95481 Qty. - 1	15  91973 Qty. - 8
16 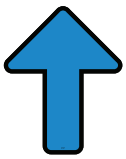 91971 Qty. - 2	17  91981 Qty. - 2	18 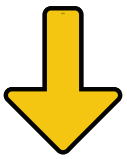 91972 Qty. - 2	19  91982 Qty. - 2	20  93806 Qty. - 1
21 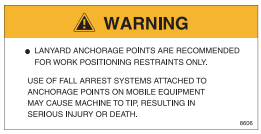 8606 Qty. - 1	22  96770 Qty. - 1	23  92416 Qty. - 1	24 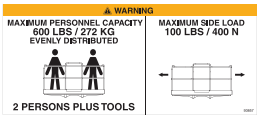 93857 Qty. - 3	25  91970 Qty. - 2
26 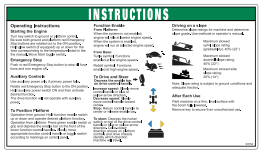 93754 Qty. - 1	27 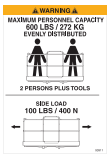 93911 Qty. - 1	28 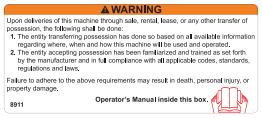 8911 Qty. - 1	29  90719 Qty. - 1	30  90718 Qty. - 1
31  90751 Qty. - 1	32 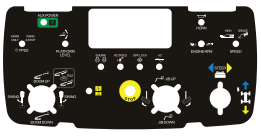 09140067 Qty. - 1	33 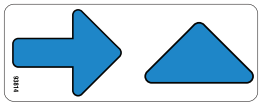 93814 Qty. - 1	34 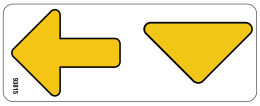 93815 Qty. - 1	

Notes

Notes

Notes

MEC Parts Order Form

Phone: 559-842-1523
Fax: 559-400-6723
Email: Parts@mecawp.com

Please Fill Out Completely:

Date: _____ **Ordered By:** _____
Account: _____ **Your Fax No.:** _____
Bill to: _____ **Ship to:** _____
_____ _____
_____ _____

Purchase Order Number _____ **Ship VIA** _____

*** All orders MUST have a Purchase Order Number*

*****Fed Ex shipments require Fed Ex account number*

Part Number	Description	Quantity	Price

All back-ordered parts will be shipped when available via the same ship method as original order unless noted below:

_____ Ship complete order only - No Backorders
_____ Ship all available parts and contact customer on disposition of back-ordered parts
_____ Other (Please specify)

Signature _____

Limited Owner Warranty

MEC Aerial Platform Sales Corp. warrants its equipment to the original purchaser against defects in material and/or workmanship under normal use and service for one (1) year from date of registered sale or date the unit left the factory if not registered. MEC Aerial Platform Sales Corp. further warrants the structural weldments of the main frame and scissor arms to be free from defects in material or workmanship for five (5) years from date of registered sale or date unit left the factory if not registered. Excluded from such warranty is the battery(s) which carries a ninety (90) day warranty from described purchase date. Warranty claims within such warranty period shall be limited to repair or replacement, MEC Aerial Platform Sales Corp's option, of the defective part in question and labor to perform the necessary repair or replacement based on MEC Aerial Platform Sales Corp's then current flat rate, provided the defective part in question is shipped prepaid to MEC Aerial Platform Sales Corp. and is found upon inspection by MEC Aerial Platform Sales Corp. to be defective in material and/or workmanship. MEC Aerial Platform Sales Corp. shall not be liable for any consequential, incidental or contingent damages whatsoever. Use of other than factory authorized parts; misuse, improper maintenance, or modification of the equipment voids this warranty. The foregoing warranty is exclusive and in lieu of all other warranties, express or implied. All such other warranties, including implied warranties of merchantability and of fitness for a particular purpose, are hereby excluded. No Dealer, Sales Representative, or other person purporting to act on behalf of MEC Aerial Platform Sales Corp. is authorized to alter the terms of this warranty, or in any manner assume on behalf of MEC Aerial Platform Sales Corp. any liability or obligation which exceeds MEC Aerial Platform Sales Corp's obligations under this warranty.

MEC Aerial Work Platforms

1401 S. Madera Avenue, Kerman, CA 93630 USA
Toll Free: 1-877-632-5438
Phone: 1-559-842-1500
Fax: 1-559-842-1520
info@MECawp.com
www.MECawp.com