Hydraulic Schematic - 1930SE

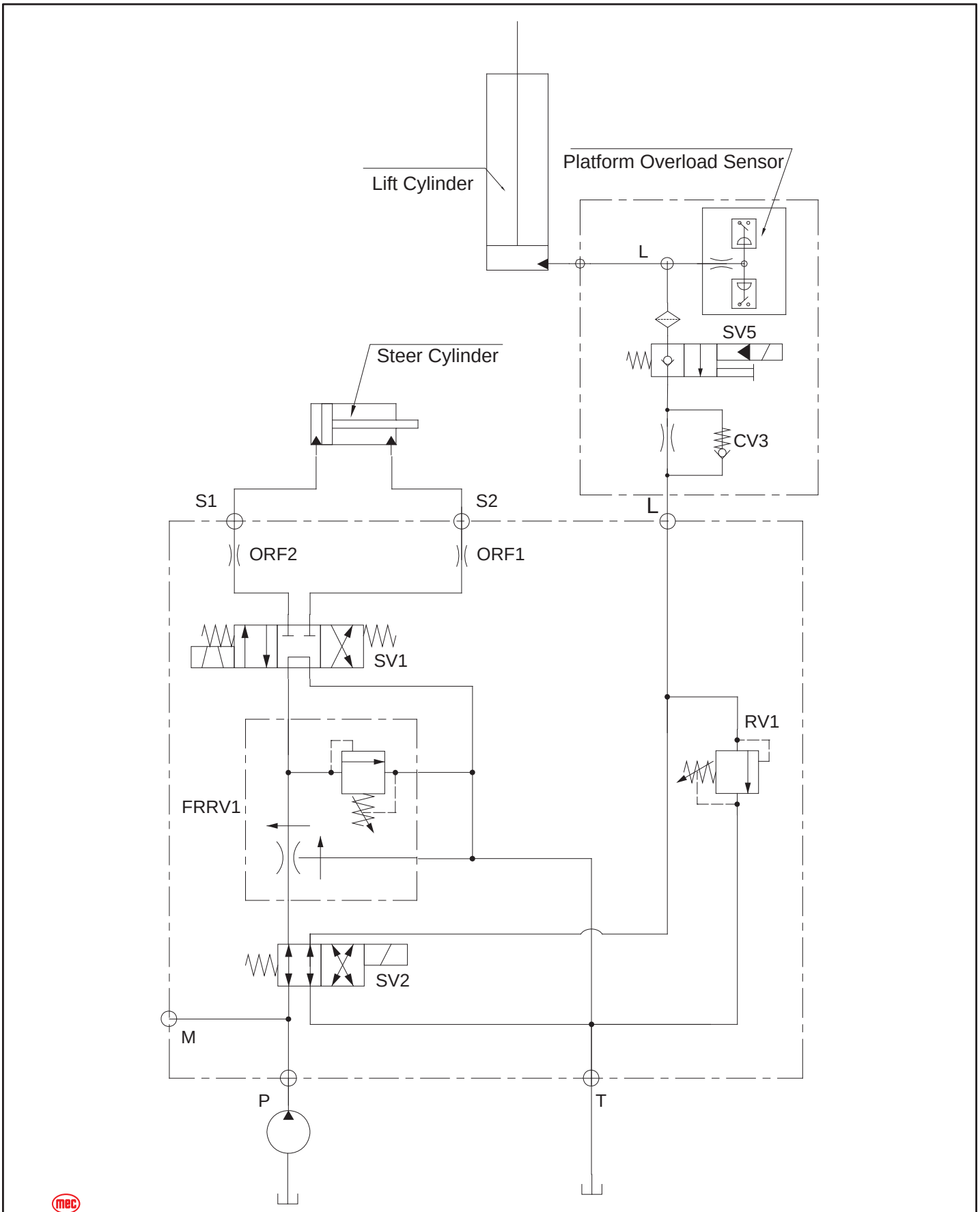

Hydraulic Components - 1930SE

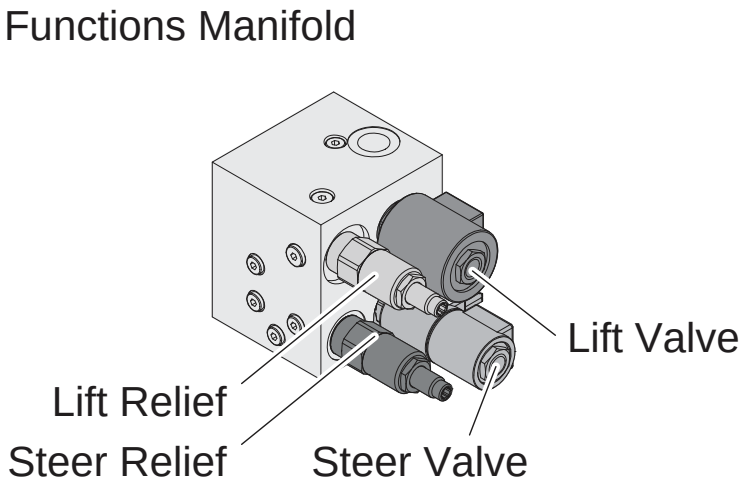

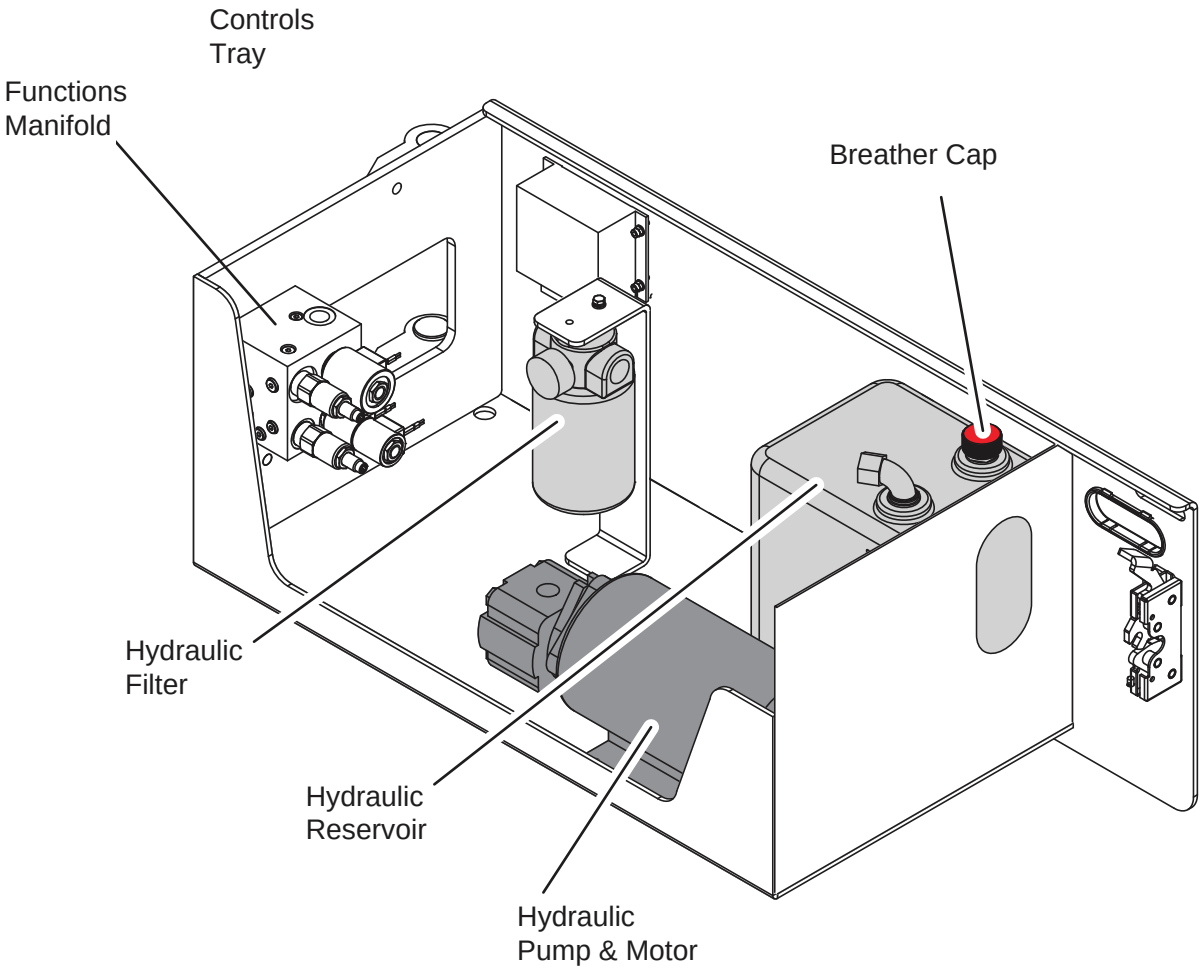

ILLUSTRATION No.
ART_5136

1930SE HYDRAULIC COMPONENTS

Hydraulic Schematic - 2632SE, 3346SE, 4046SE, 4555SE

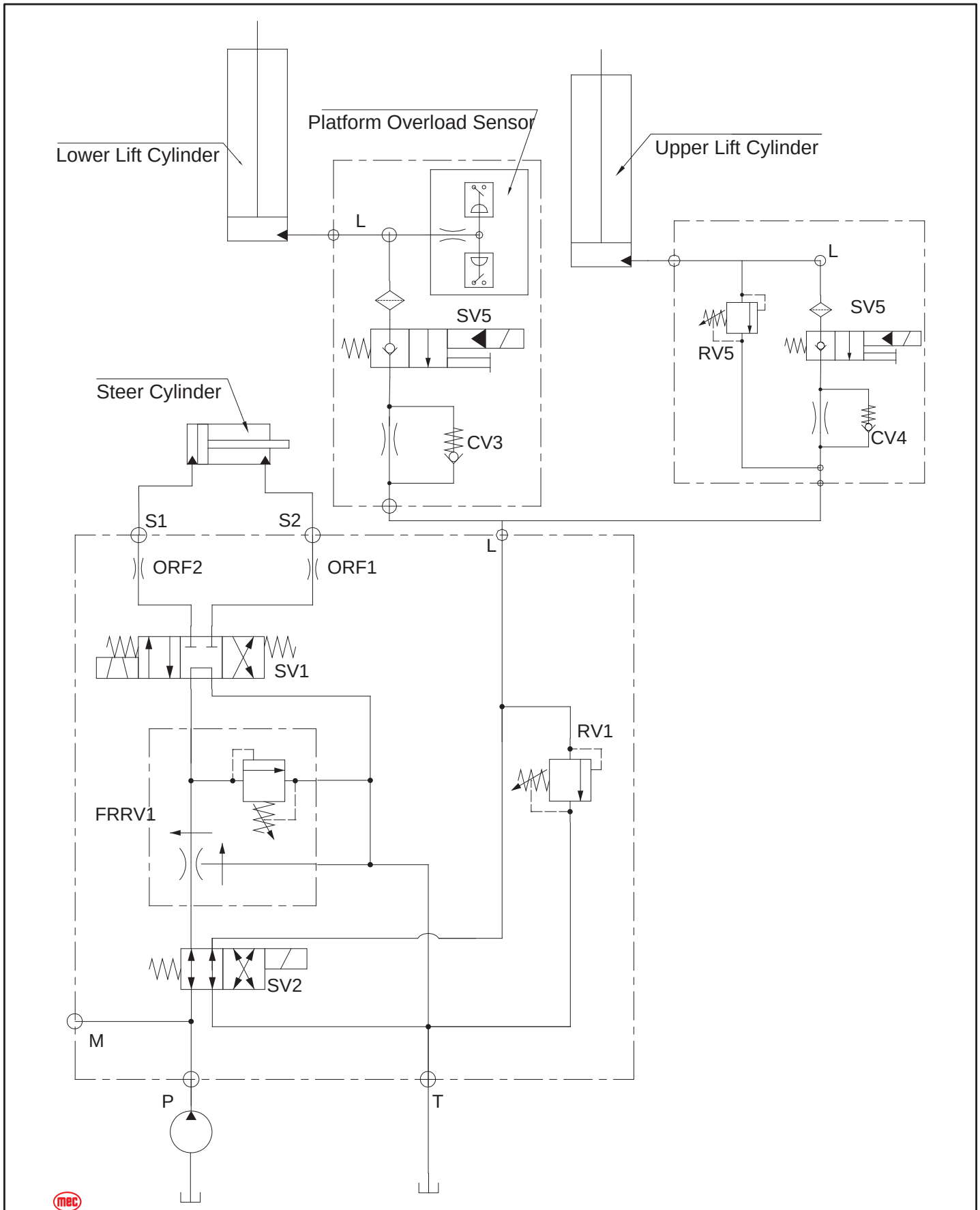

ILLUSTRATION No.
ART_5140

2632SE, 3346SE, 4046SE, 4555SE HYDRAULIC SCHEMATIC

Hydraulic Components - 2632SE, 3346SE, 4046SE, 4555SE

Functions Manifold

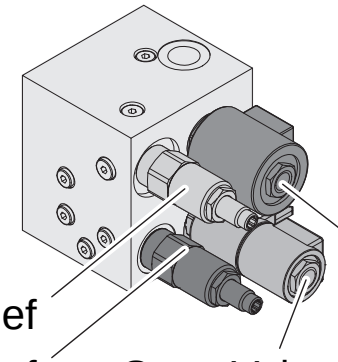

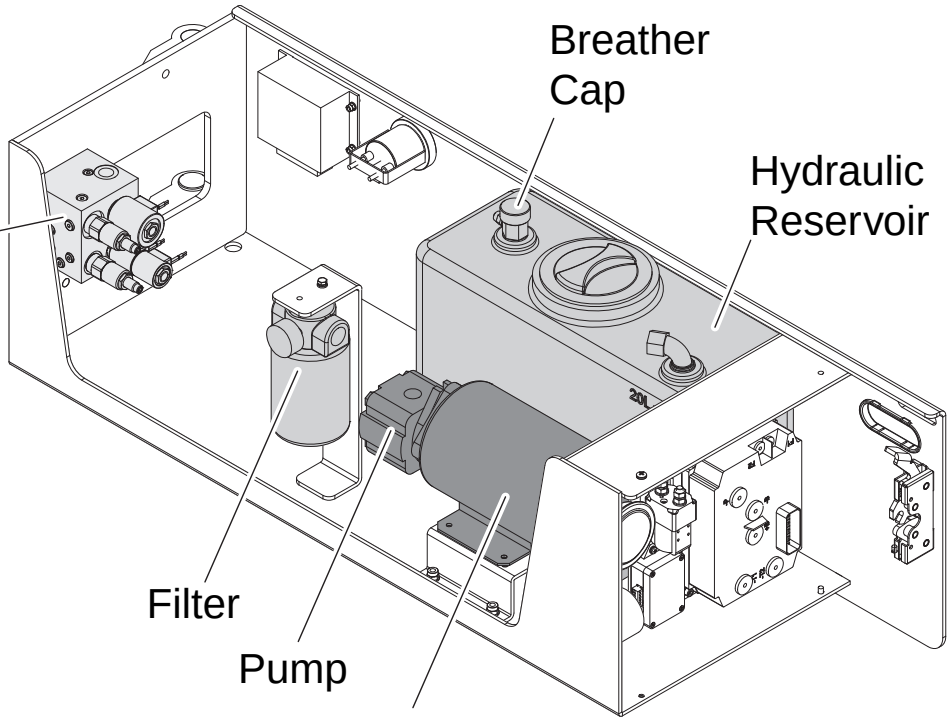

ILLUSTRATION No.
ART_5136

2632SE, 3346SE, 4046SE, 4555SE HYDRAULIC COMPONENTS

Function Valves

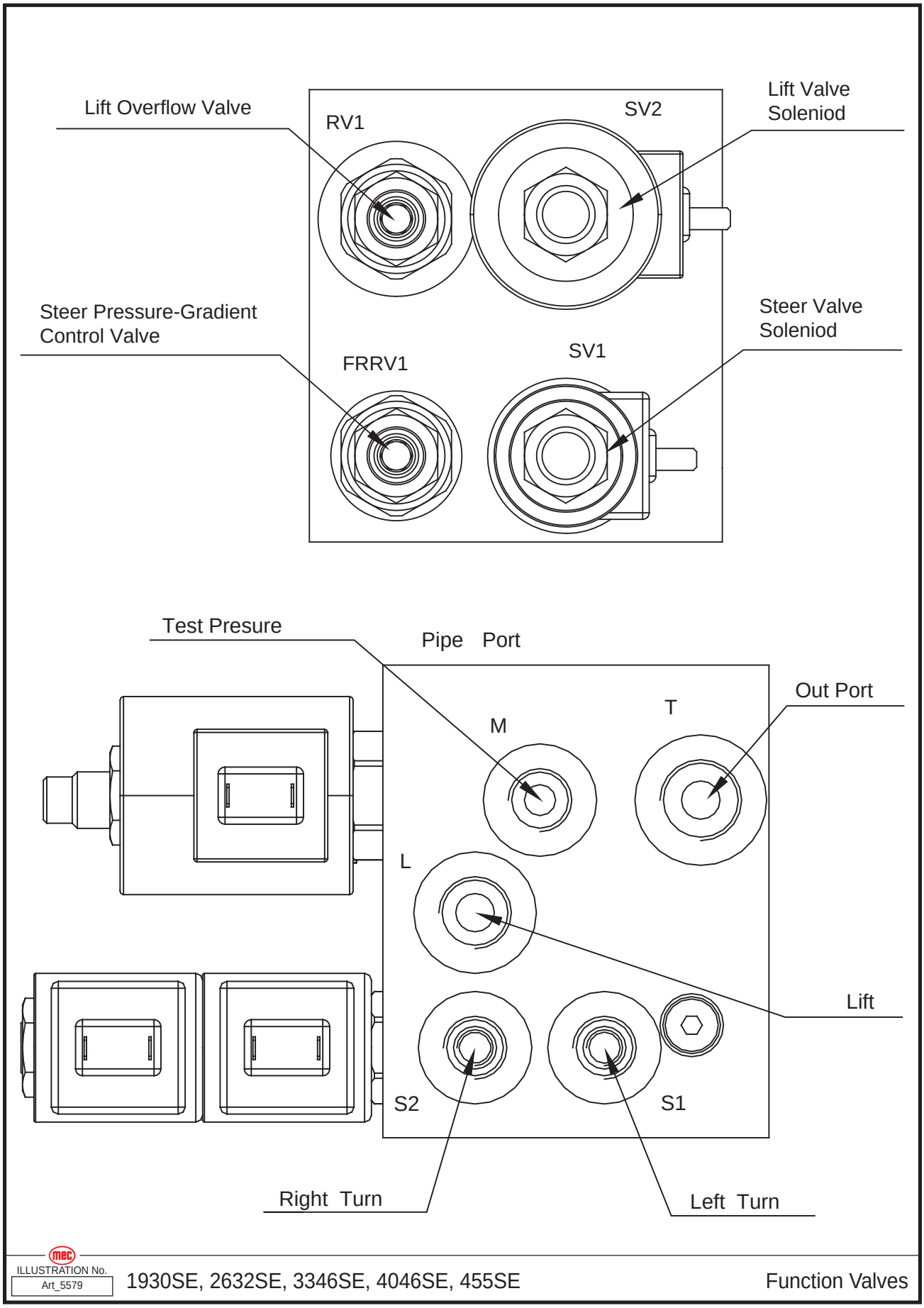

ILLUSTRATION No. Art_5579 1930SE, 2632SE, 3346SE, 4046SE, 455SE Function Valves

Electrical Schematic - 1930SE

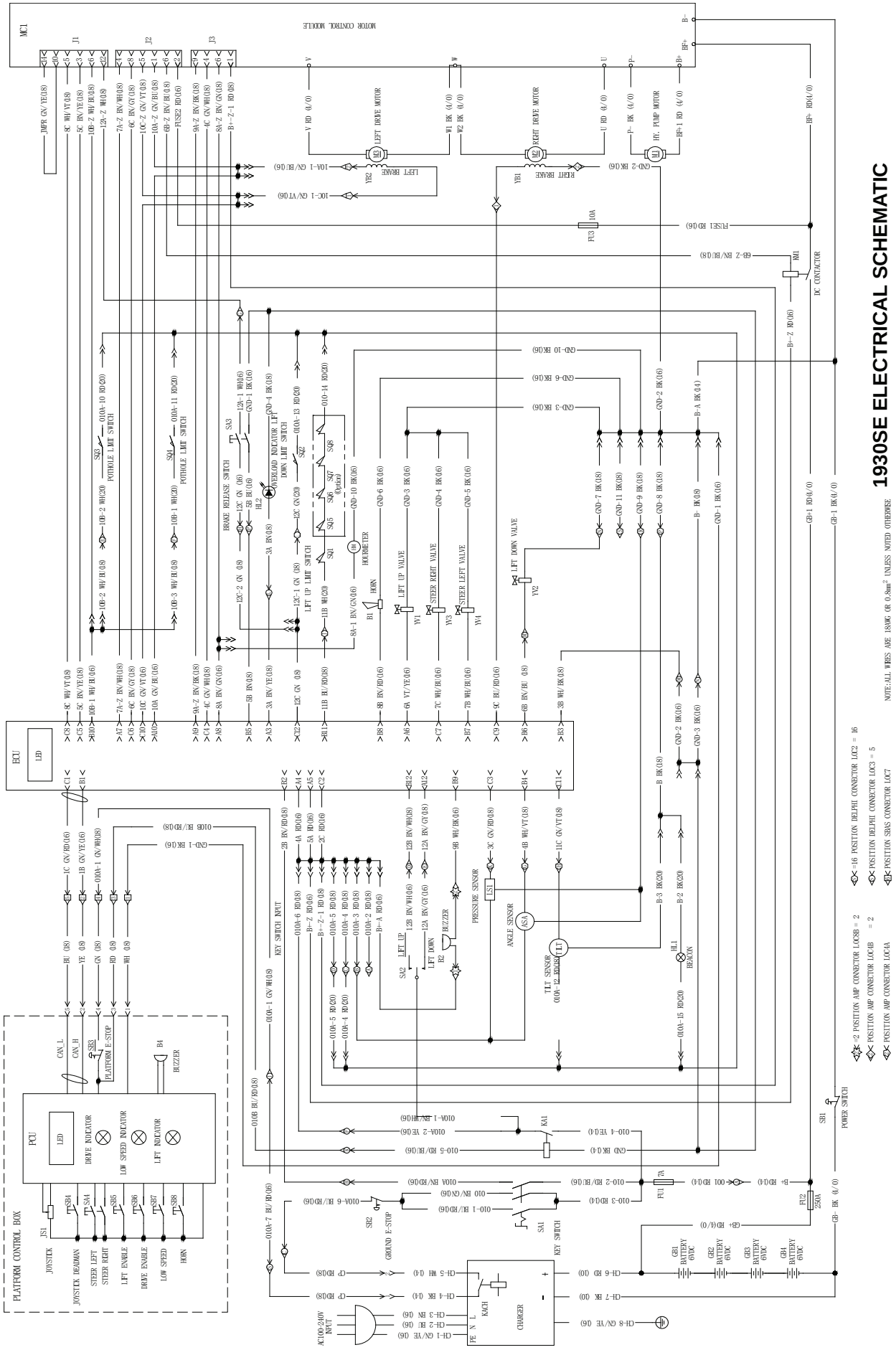

Harness Control Circuit - 1930SE

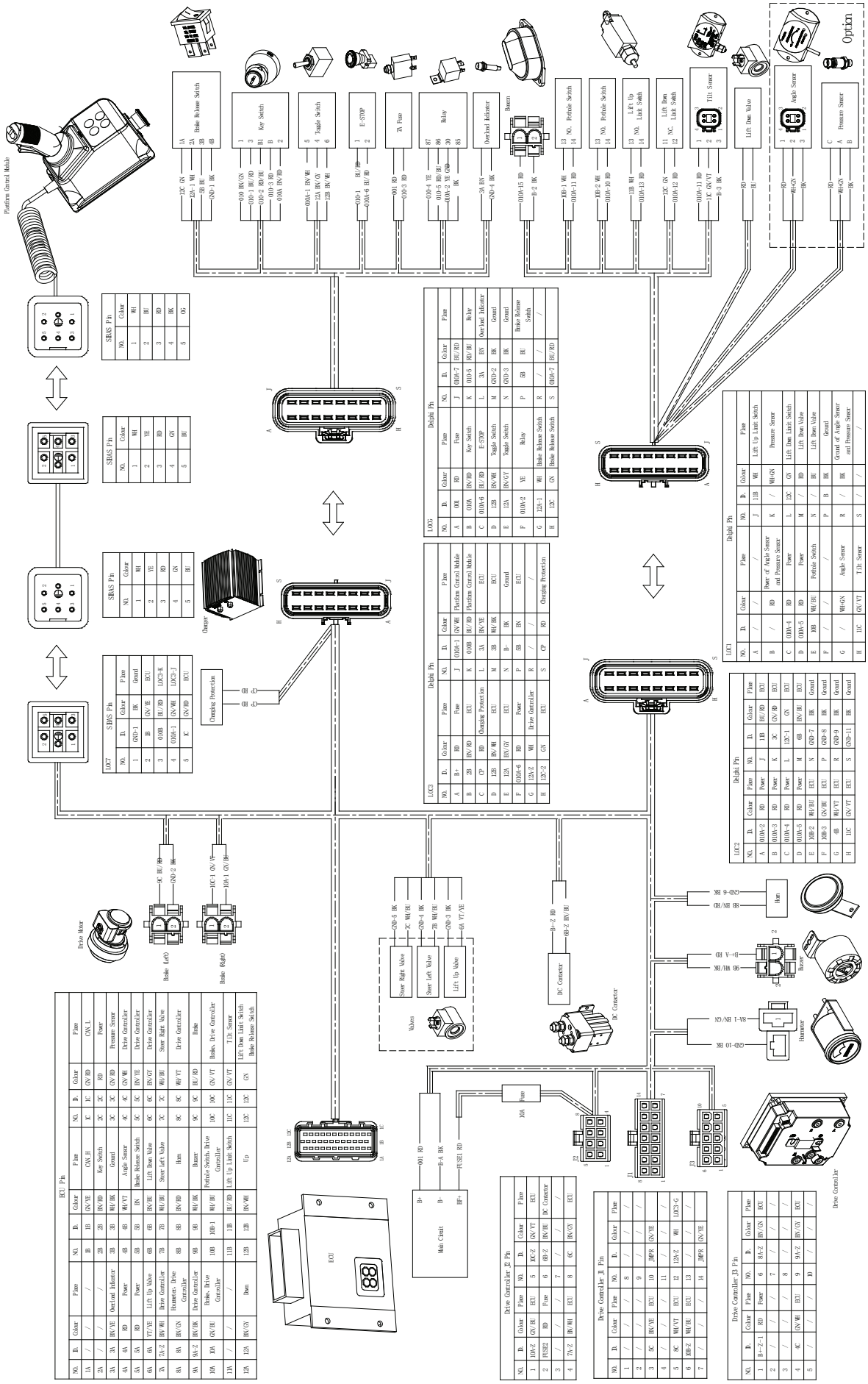

Electrical Schematic - 2632SE, 3346SE, 4046SE, 4555SE

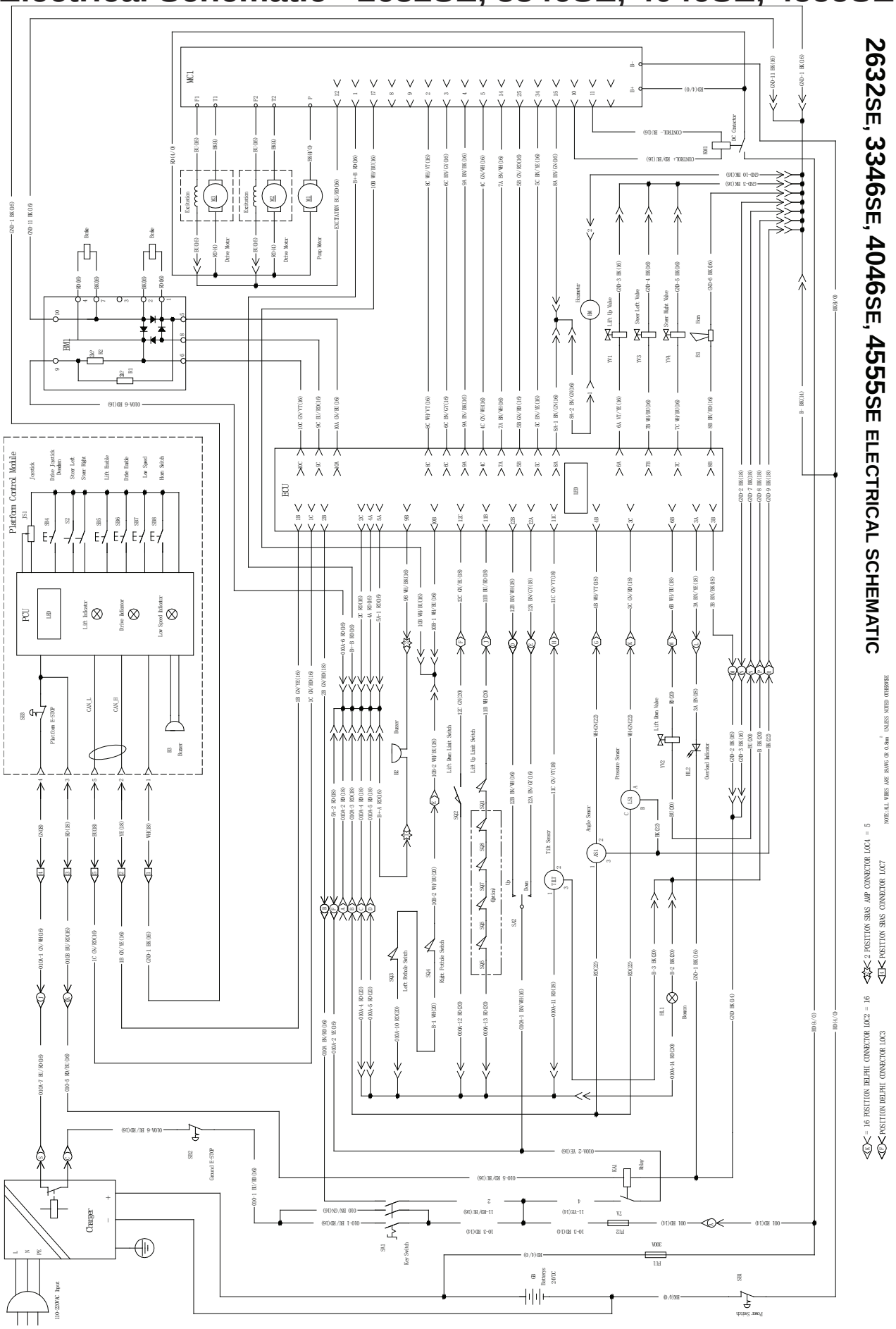

Harness Control Circuit - 2632SE, 3346SE, 4046SE, 4555SE

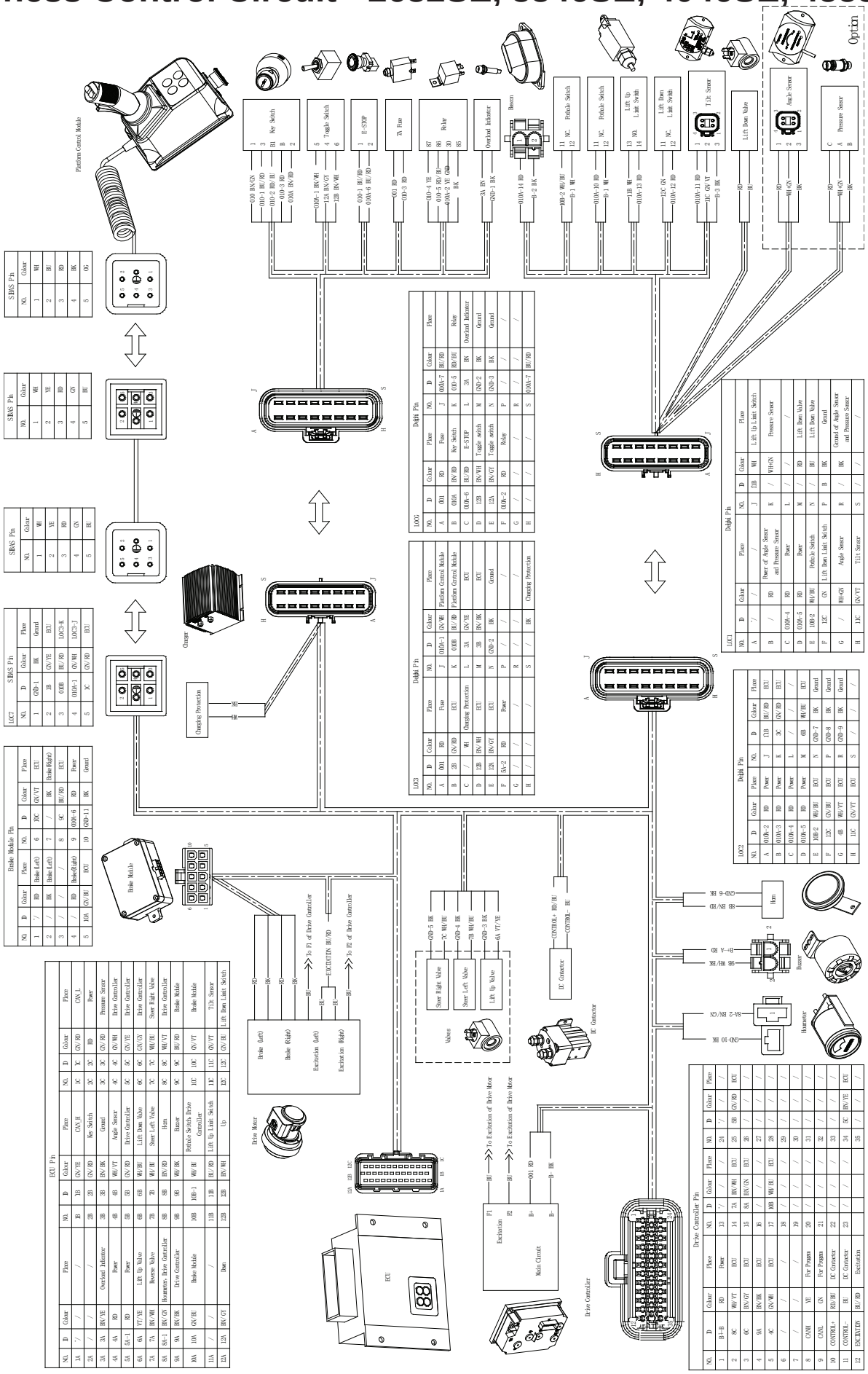

Wiring Diagram

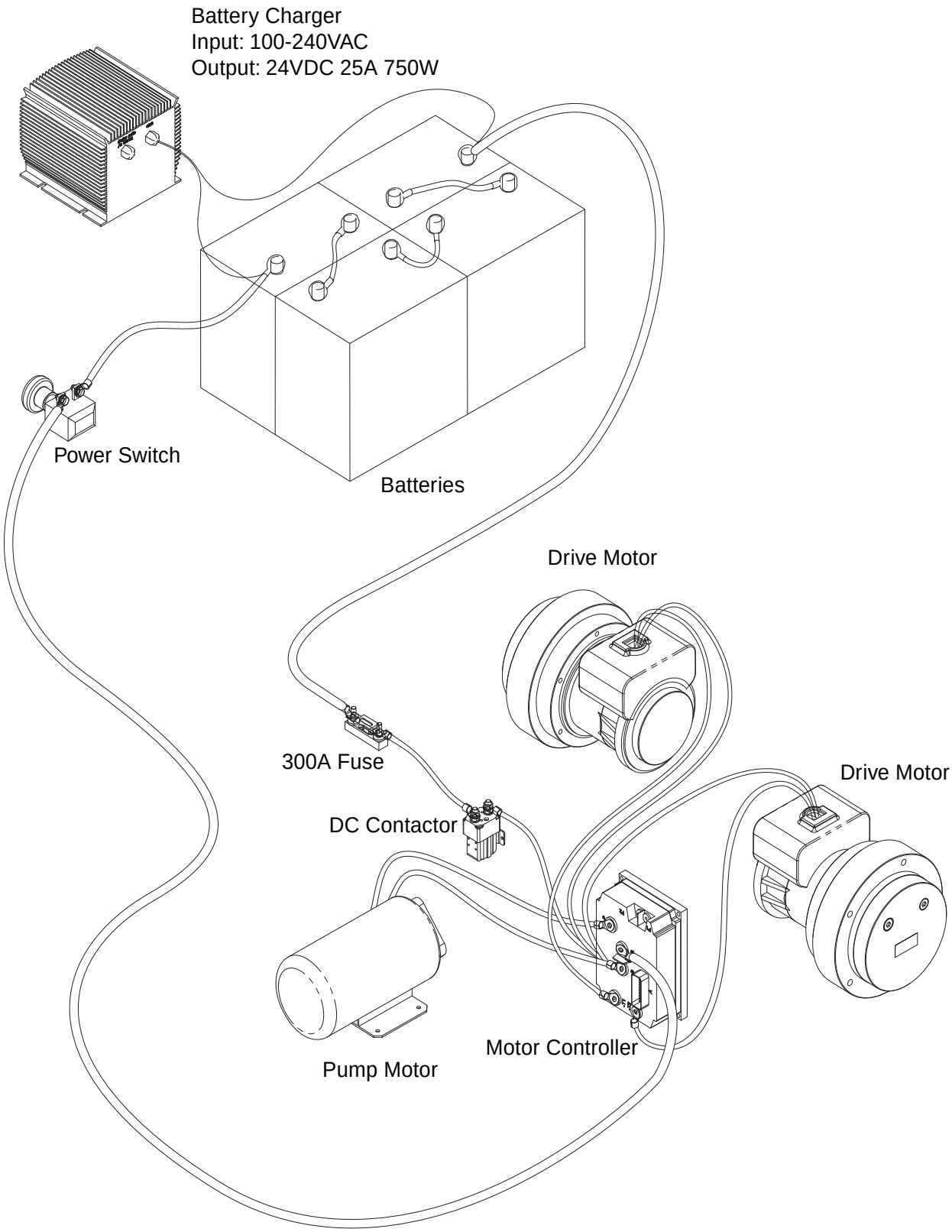

ILLUSTRATION No.
ART_5143

1930SE, 2632SE, 3346SE, 4046SE, 4555SE WIRING DIAGRAM