Service & Parts Manual

92RT Scissor Lifts

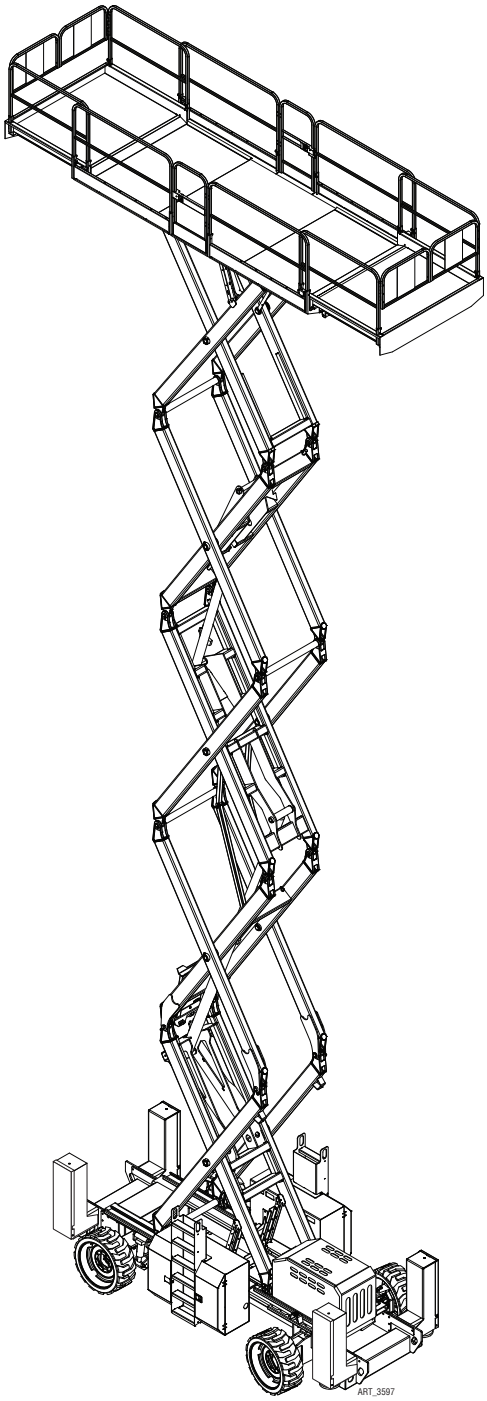

3392RT-T Serial Number Range - 13600000 - Up
5492RT Serial Number Range - 11900000 - Up
6092RT Serial Number Range - 12900000 - Up

Part # 91860
March 2025

Revision History

Date	Reason for Update
October 2010	New Release
August 2015	Added 3392RT and 6092RT model information
November 2018	Continuous Update
August 2020	Tier 4 Final Update
December 2024	Updated 94804 and 94805 serial number
March 2025	Corrected 93861 to 94768 on page 309

MEC Aerial Work Platforms

1401 S. Madera Avenue, Kerman, CA 93630 USA
Toll Free: 1 - 877 - 632 - 5438
Phone: 1 - 559 - 842 - 1500
Fax: 1 - 559 - 842 - 1520
info@MECawp.com
www.MECawp.com

Table of Contents

Chapter 1 - Service 1

Service Introduction 1

Section 1 - MEC Operator Policy 2
MEC Operator Policy 2

Section 2 - Safety Symbols & General Safety Tips 3
Safety Symbols & General Safety Tips 3

Section 3 - Machine Specifications 4
Machine Specifications 4

Section 4 - Torque Specifications 5
Bolt Torque Specification - American Standard 5
Bolt Torque Specification - Metric Standard 6
Hydraulic Components Torque Table 7

Section 5 - Maintenance Lock 8
Maintenance Lock 8

Section 6 - Hydraulic System, Electrical System And Total System . . . 9
Hydraulic System, Electrical System And Total System 9

Section 7 - Primary Machine Components 10
Machine Components Locations 10

Section 8 - Emergency Systems And Procedures 11
Emergency Systems And Procedures 11

Section 9 - Transport And Lifting Instructions 12
Brake Release And Towing 12
Lift And Support The Machine 13
Transporting The Machine 14

Section 10 - Hydraulic System 15
Hydraulic System – General 15
Hydraulic Roadmap 16
Hydraulic Fluid 18
Hydraulic Pumps 20
Hydraulic Manifolds 24
Hydraulic Pressure Adjustment 28
Drive Function 34
Axle Lock Function 36
Steering Function 37
Outrigger System 38
Platform Lift Function 39
General Cylinder Repair 42
Generator Option 44

Section 11 - Electrical System 45
Electrical System – General 45
Batteries 47
Lower Controls. 50
Upper Controls. 51
Alarms and Switches 52
Deutsch Connectors 54
Continuity Checks 55
GP400 Control Module Setup 58
GP400 Calibration 60
Calibration Problems 65

Section 12 - Mechanical Components 72
Mechanical Components 72

Section 13 - Troubleshooting 96
General Troubleshooting Tips 96
Electrical System Troubleshooting. 97
GP400 Module. 98
Matrix Module 100
Valve Constant Current Modules And Terminal Block Module 101
EZ-Cal Scan Tool 102
Adjustments, Setup & Diagnostics Flowcharts 103
EZ-Cal Adjustment. 114
EZ-Cal Retrieve Mode And Help Messages 115

Section 14 - Schematics 124
Hydraulic Schematics 124
Hydraulic Schematic, 5492RT 125
Hydraulic Schematic, 3392RT-T ~#13600044 126
Hydraulic Schematic, 3392RT-T #13600045~ 127
Hydraulic Schematic, 6092RT 128
Function Manifold, MA1 129
Brake Manifold, MA2 130
Drive Manifold, MA3 131
Electric Schematic, 5492RT, 1 of 3 132
Electric Schematic, 5492RT, 2 of 3 133
Electric Schematic, 5492RT, 3 of 3 134
Electric Schematic, 3392RT-T, 1 of 3 135
Electric Schematic, 3392RT-T, 2 of 3 136
Electric Schematic, 3392RT-T, 3 of 3 137
Electric Schematic, 6092RT, 1 of 3 138
Electric Schematic, 6092RT, 2 of 3 139
Electric Schematic, 6092RT, 3 of 3 140
Upper Controls Components 141
Lower Controls Components 142

Chapter 2 - Parts 143

Parts Introduction 143

Section 15 - Controls 144
Upper Controls. 144
Upper Control Box Assembly - J.R. Merritt 146
Upper Control Box Cover Assembly 148
Upper Control Joystick. 150
Lower Controls. 152

Section 16 - Platform and Rails 154
Platform, Basic Assembly, Early 5492RT 154
Platform, Drawing 1 of 3, Early 5492RT 156
Platform, Drawing 2 of 3, Early 5492RT 158
Platform, Drawing 3 of 3, Early 5492RT 160
Platform Extension, Early 5492RT. 162
Platform, Basic Assembly, Later 5492RT, 3392RT, 6092RT 164
Main Platform, Later 5492RT, 3392RT, 6092RT 166
Platform Centering Brackets, Later 5492RT, 3392RT, 6092RT 168
Platform Extension, 1 of 2, Later 5492RT, 3392RT, 6092RT 170
Platform Extension, 2 of 2, Later 5492RT, 3392RT, 6092RT 172
Slideout Deck Assembly - 6092RT From Serial # 12900135 174

Section 17 - Scissor Assembly 176
Scissor Section 1 & Chassis, 5492RT. 176
Scissor Section 1, 5492RT 178
Scissor Section 2, 5492RT 180
Scissor Section 3, 5492RT 182
Scissor Section 4, 5492RT 184
Scissor Section 5, 5492RT 186
Scissor Section 5 & Platform, 5492RT 188
Cable Guide, 5492RT 190
Scissor Structural Components, 3392RT 192
Scissor End Connections, 3392RT 194
Scissor Center Connections, 3392RT 196
Scissor Structural Components, 6092RT 198
Scissor End Connections, 6092RT 200
Scissor Center Connections, 6092RT 202
Maintenance Stand 204
Lift Cylinder Mounting 206

Section 18 - Axles 208
Front Axle Assembly, 1 of 2, Early 5492RT Models w/ Pinned Front Axle. 208
Front Axle Assembly, 2 of 2, Early 5492RT Models w/ Pinned Front Axle. 210
Front Axle Assembly, Later 92RT Models w/ Welded Front Axle 212
Rear Axle Assembly, 5492RT 214
Rear Axle Assembly, 3392RT, 6092RT 216
Rear Axle/Chassis Articulation. 218

Section 19 - Hydraulics 220
Hydraulic Components 220
Function Manifold Assembly 222
Traction Manifold Assembly -- 5492RT 224

Traction Manifold Assembly -- 3392RT ~#13600044 226
Brake Manifold Assembly 228
Wheel Motor Assembly, 3392RT ~#13600044 230
Wheel Motor Assembly 232
Auxiliary Power Unit. 3392RT & 5492RT only 234
Filter Assembly 236
Drive Pump 238
Lift Pump Assembly 240
Hydraulic Tank Assembly 242
Outrigger Cylinder 244
Axle Lock Cylinder 246
Steer Cylinder 248
Lift Cylinders, 3392RT, 5492RT 250
Lift Cylinders, 6092RT 252
Lift Circuit, 3392RT, 5492RT 254
Lift Circuit, 6092RT 256
Drive Circuit -- 5492RT 258
Drive Circuit-- 3392RT ~#13600044 260
Drive Circuit-- 3392RT #13600045~, 6092RT 262
Brake Circuit 264
High Speed Circuit -- 5492RT, 6092RT, 3392RT #13600045~ 266
High Speed Circuit -- 3392RT ~#13600044 268
Case Drain/Return Circuit, 1 of 2 270
Case Drain/Return Circuit, 2 of 2 (continued) 272
Steering Circuit 274
Outrigger Circuit 276
Axle Lock Circuit 278
Auxiliary Down Circuit, 5492RT, 3392RT only 280
Drive Pump Hoses, 1 of 3 282
Drive Pump Hoses, 2 of 3 (continued) 284
Drive Pump Hoses, 3 of 3 (continued) 285
Function Pump Circuit 286

Section 20 - Base **288**
Module Installation 288
Control Module, Drawing 1 of 2 290
Control Module, Drawing 2 of 2 292
Tank Module 294
Engine Enclosure 296
Chassis Assembly 298
Engine Tray Assembly 300
Engine Components, Drawing 1 of 3 302
Engine Components, Drawing 2 of 3 304
Engine Components, Drawing 3 of 3 306
Outrigger Assembly 308
Wiring Harness & Electrical Components 310
Scissor Guard Assembly -- Option, Early 5492RT Models 312
Generator Option, RT 314

Section 21 - Decals, ANSI 316
Decals, 5492RT, 6092RT -- ANSI Specification 316

Section 22 - Decals, CE 319
Decals, 5492RT -- CE Specification 319
Decal Placement, 5492RT -- CE Specification 320
Decals, 6092RT -- CE Specification 321
Decal Placement, 6092RT -- CE Specification 322
Decals, 3392RT -- CE Specification 323
Decal Placement, 3392RT -- CE Specification 324

Service Introduction

This Service section is designed to provide you, the customer, with the instructions needed to properly maintain the MEC self-propelled aerial work platform. When used in conjunction with the illustrated Parts section in this manual and the Operator's Manual (provided separately), this manual will assist you in making necessary adjustments and repairs, and identifying and ordering the correct replacement parts.

All parts represented here are manufactured and supplied in accordance with MEC quality standards. We recommend that you use genuine MEC parts to ensure proper operation and reliable performance.

To obtain maximum benefits from your MEC Aerial Work Platforms, always follow the proper operating and maintenance procedures. Only trained authorized personnel should be allowed to operate or service this machine. Service personnel should read and study the Operator's, and the Service and Parts Manuals in order to gain a thorough understanding of the unit prior to making any repairs.

MEC Operator Policy

Note: *The best method to protect yourself and others from injury or death is to use common sense. If you are unsure of any operation,* ***don't start*** *until you are satisfied that it is safe to proceed and have discussed the situation with your supervisor.*

Service personnel and machine operators must understand and comply with all warnings and instructional decals on the body of the machine, at the ground controls, and platform control console.

DANGER

MODIFICATIONS OF THIS MACHINE FROM THE ORIGINAL DESIGN AND SPECIFICATIONS WITHOUT WRITTEN PERMISSION FROM MEC ARE STRICTLY FORBIDDEN. A MODIFICATION MAY COMPROMISE THE SAFETY OF THE MACHINE, SUBJECTING OPERATOR(S) TO SERIOUS INJURY OR DEATH.

MEC's policies and procedures demonstrate our commitment to Quality and our relentless ongoing efforts towards Continuous Improvement, due to which product specifications are subject to change without notice.

Any procedures not found within this manual must be evaluated by the individual to assure oneself that they are "proper and safe."

Your MEC Aerial Work Platform has been designed, built, and tested to provide many years of safe, dependable service. Only trained, authorized personnel should be allowed to operate or service the machine.

MEC, as manufacturer, has no direct control over machine application and operation. Proper safety practices are the responsibility of the user and all operating personnel.

If there is a question on application and/or operation, contact MEC Aerial Work Platforms:

MEC Aerial Work Platforms

1401 S. Madera Avenue, Kerman, CA 93630 USA
Toll Free: 1 - 877 - 632 - 5438
Phone: 1 - 559 - 842 - 1500
Fax: 1 - 559 - 842 - 1520
info@MECawp.com
www.MECawp.com

Safety Symbols & General Safety Tips

MEC manuals and decals use symbols, colors and signal words to help you recognize important safety, operation and maintenance information.

DANGER	**RED and the word DANGER – Indicates an imminently hazardous situation which, if not avoided, will result in death or serious injury.**
WARNING	**ORANGE and the word WARNING – Indicates a potentially hazardous situation which, if not avoided, could result in death or serious injury.**
CAUTION	**YELLOW with alert symbol and the word CAUTION – Indicates a potentially hazardous situation which, if not avoided, may result in minor or moderate injury.**
CAUTION	**YELLOW without alert symbol and the word CAUTION – Indicates a potentially hazardous situation which, if not avoided, may result in property damage.**
NOTICE	**GREEN and the word NOTICE – Indicates operation or maintenance information.**

Regular inspection and constant maintenance is the key to efficient economical operation of your aerial work platform. It will help to assure that your equipment will perform satisfactorily with a minimum of service and repair.

The actual operating environment of the machine governs the inspection schedule. Correct lubrication is an essential part of the preventative maintenance to minimize wear on working parts and ensure against premature failure. By maintaining correct lubrication, the possibility of mechanical failure and resulting downtime is reduced to a minimum.

- Never leave hydraulic components or hoses open. They must be protected from contamination (including rain) at all times.
- Never open a hydraulic system when there are contaminants in the air.
- Always clean the surrounding area before opening hydraulic systems.
- Use only recommended lubricants. Improper lubricants or incompatible lubricants may be as harmful as no lubrication.
- Watch for makeshift “fixes” which can jeopardize safety as well as lead to more costly repair.

Machine Specifications

		5492RT		6092RT		3392RT-T	
Working Height*	Outriggers Deployed	60 ft*	18.46 m*	66 ft*	20 m*	39 ft*	12 m*
	Outriggers Not Deployed	36 ft*	11.15 m*	36 ft*	11 m*		
Platform Height	Outriggers Deployed	54 ft	16.46 m	60 ft	18 m	33 ft	10 m
	Outriggers Not Deployed	30 ft	9.15 m	30 ft	9 m		
Stowed Height	Rails Up	128 in	3.25 m	128 in	3.25 m	9.3 ft	2.84 m
	Rails Folded Down	97 in	2.46 m	97 in	2.46 m	6.7 ft	2.05 m
Maximum Occupants	0 m/s wind	5		4		5	
	45 km/h (12.5 m/s) wind	5		4		5	
Lift Capacity		1,500 lbs	680 kg	1,200 lbs	545 kg	2,650 lbs	1,200 kg
Maximum Operating Inclination		3° side/side, 4° fore/aft to 30 ft (9.15 m); Outriggers must be used above this height		3° side/side, 4° fore/aft to 30 ft (9.15 m); Outriggers must be used above this height		†	
Platform Dimensions	Length (Inside Rails)	202 in / 5.13 m					
	Width (Inside Rails)	75 in / 1.91 m					
	Guardrail Height	44.75 in / 1.14 m					
	Toeboard Height	7 in / 18 cm					
Overall Length		209 in / 5.31 m					
Overall Width		92 in / 2.34 m					
Wheel Base		114 in / 2.9 m					
Wheel Track		80 in / 2.03 m					
Turning Radius	Inside	7 ft / 2.13 m					
	Outside	17 ft 6 in / 5.33 m					
Ground Clearance		13 in / 43 cm					
Machine Weight** (Approximate, unloaded)		19,600 lb**	8,890 kg**	21,780 lb**	9,880 kg	16,038 lb**	7,275 kg**
Drive System (Proportional)	Drive Speed - Platform Elevated	0-0.4 mph	0-0.6 km/h	0-0.25 mph	0-0.4 km/h	†	
	Drive Speed - Platform Lowered	0-4.4 mph	0-7.0 km/h	0-4.4 mph	0-7.0 km/h	6 mph	9.6 km/h
Lift/Lower Speeds (Approximate)		60 sec/65 sec		72 sec/102 sec		46 sec/46 sec	
Gradeability		40%/22°		40%/22°		40%/22°	
Ground Pressure/Wheel (Maximum)		74 psi	5.2 kg/cm²	80.4 psi	5.65 kg/cm²	88 psi	6.24 kg/cm²
Wheel Load		6,350 lb	2,880 kg	6,900 lb	3,130 kg	5,776 lb	2,620 kg
Wind Speed (Maximum)		28 mph / 45 km/h (12.5 m/s)					
Noise Level (Maximum)		86 dB					
Tire Size - Standard		315/55 D20 12-ply, foam-filled					
Wheel Lug Nut Torque		120 ft/lb / 162.7 Nm					
Hydraulic Pressure	Drive System	4500 psi / 310 bar					
	Lift System	2800 psi / 193 bar					
	Steering System	2800 psi / 193 bar					
Hydraulic Fluid Capacity		40 gallon / 151 liters					
Power Source		Kubota V-2403T diesel					
Noise Level		86 dB maximum					
Maximum Vibration		Does not exceed 2.5 m/sec at operator's position					
Ambient Operating Range		-30° C minimum; 50° C maximum					
Fuel Capacity		25 gallon / 95 liter					
Brakes		4 Wheel Multi-Disc					

*Working Height adds 6 feet (2 m) to platform height.
**Weight may increase with certain options or country standards.

†3392RT Elevated Angle Rating & Drive Speed	Platform Height			
	4m	6m	8m	10m
Rated Tilt Angle side-to-side	8°	6°	5°	4°
Rated Tilt Angle fore-and-aft	10°	8°	6°	5°
Maximum Elevated Drive Speed	5 km/h	4 km/h	3 km/h	2 km/h

Bolt Torque Specification - American Standard

Fasteners

Use the following values to apply torque unless a specific torque value is called out for the part being used.

American Standard Cap Screws								
SAE Grade	**5**				**8**			
Cap Screw Size (inches)								
	Torque				**Torque**			
	Ft.	**Lbs**	**Nm**		**Ft.**	**Lbs**	**Nm**	
	Min	**Max**	**Min**	**Max**	**Min**	**Max**	**Min**	**Max**
1/4 - 20	6.25	7.25	8.5	10	8.25	9.5	11	13
1/4 - 28	8	9	11	12	10.5	12	14	16
5/16 - 18	14	15	19	20	18.5	20	25	27
5/16 - 24	17.5	19	12	26	23	25	31	34
3/8 - 16	26	28	35	38	35	37	47.5	50
3/8 - 24	31	34	42	46	41	45	55.5	61
7/16- 14	41	45	55.5	61	55	60	74.5	81
7/16 - 20	51	55	69	74.5	68	75	92	102
1/2 - 13	65	72	88	97.5	86	96	116	130
1/2 - 20	76	84	103	114	102	112	138	152
9/16 - 12	95	105	129	142	127	140	172	190
9/16 - 18	111	123	150	167	148	164	200	222
5/8 - 11	126	139	171	188	168	185	228	251
5/8 - 18	152	168	206	228	203	224	275	304
3/4 - 10	238	262	322	255	318	350	431	474
3/4 - 16	274	302	371	409	365	402	495	544
7/8 - 9	350	386	474	523	466	515	631	698
7/8 - 14	407	448	551	607	543	597	736	809
1- 8	537	592	728	802	716	790	970	1070
1 - 14	670	740	908	1003	894	987	1211	1137

Torque values apply to fasteners as received from the supplier, dry or when lubricated with normal engine oil.

If special graphite grease, molydisulphide grease, or other extreme pressure lubricants are used, these torque values do not apply.

Bolt Torque Specification - Metric Standard

Fasteners

Use the following values to apply torque unless a specific torque value is called out for the part being used

Metric Cap Screws								
Metric Grade	**8.8**				**10.9**			
Cap Screw Size (Millimeters)								
	Torque				**Torque**			
	Ft. Lbs		**Nm**		**Ft. Lbs**		**Nm**	
	Min	**Max**	**Min**	**Max**	**Min**	**Max**	**Min**	**Max**
M6 × 1.00	6	8	8	11	9	11	12	15
M8 × 1.25	16	20	21.5	27	23	27	31	36.5
M10 × 1.50	29	35	39	47	42	52	57	70
M12 × 1.75	52	62	70	84	75	91	102	123
M14 × 2.00	85	103	115	139	120	146	163	198
M16 × 2.50	130	158	176	214	176	216	238	293
M18 × 2.50	172	210	233	284	240	294	325	398
M20 × 2.50	247	301	335	408	343	426	465	577
M22 × 2.50	332	404	450	547	472	576	639	780
M24 × 3.00	423	517	573	700	599	732	812	992
M27 × 3.00	637	779	863	1055	898	1098	1217	1488
M30 × 3.00	872	1066	1181	1444	1224	1496	1658	2027

Torque values apply to fasteners as received from the supplier, dry or when lubricated with normal engine oil.

If special graphite grease, molydisulphide grease, or other extreme pressure lubricants are used, these torque values do not apply.

Hydraulic Components Torque Table

Note: Always lubricate threads with clean hydraulic fluid prior to installation.

Use the following values to torque hydraulic components when a specific value is not available. Always check for torque values in the following places before relying on the Hydraulic Components Torque Table.

- Parts drawings and service instructions in this manual.
- Packaging and instruction sheets provided with new parts.
- Instruction manuals provided by the manufacturer of the component being serviced.

Type: SAE Port Series	Cartridge Poppet		Fittings		Hoses	
	Ft. lbs	Nm	Ft. lbs	Nm	In. lbs	Nm
#4	N/A	N/A	N/A	N/A	135 - 145	15 - 16
#6	N/A	N/A	10 - 20	14 - 27	215 - 245	24 - 28
#8	25 - 30	31 - 41	25 - 30	34 - 41	430 - 470	49 - 53
#10	35 - 40	47 - 54	35 - 40	47 - 54	680 - 750	77 - 85
#12	85 - 90	115 - 122	85 - 90	115 - 122	950 - 1050	107 - 119
#16	130 - 140	176 - 190	130 - 140	176 - 190	1300 - 1368	147 - 155

Maintenance Lock

Set Maintenance Lock

1. Elevate platform approximately 16 feet (5 m) and rotate maintenance lock to Blocked position
2. Lower platform until scissor assembly comes to rest on the maintenance lock.
3. Scissor assembly is blocked.

Maintenance Tips

- Never leave hydraulic components or hoses open. They must be protected from contamination (including rain) at all times.
- Never open a hydraulic system when there are contaminants in the air.
- Always clean the surrounding area before opening hydraulic systems.
- Use only recommended lubricants. Improper lubricants or incompatible lubricants may be as harmful as no lubrication.
- Watch for makeshift “fixes” which can jeopardize safety as well as lead to more costly repair.

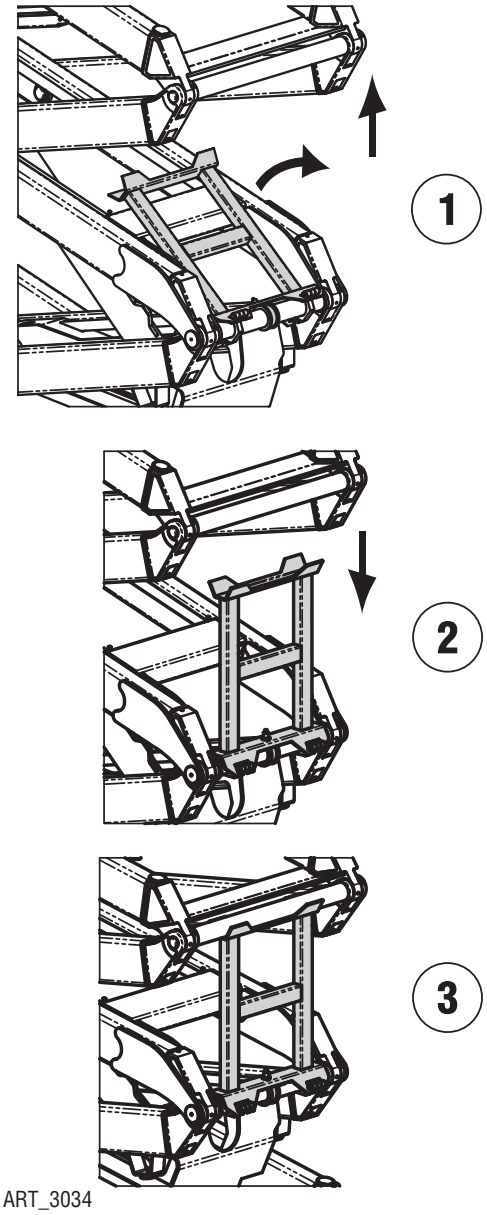

ART_3034

Hydraulic System, Electrical System And Total System

Hydraulic System

WARNING

HYDRAULIC FLUID UNDER PRESSURE CAN PENETRATE AND BURN SKIN, DAMAGE EYES, AND MAY CAUSE SERIOUS INJURY, BLINDNESS, AND EVEN DEATH.

CORRECT LEAKS IMMEDIATELY.

CAUTION

Hydraulic fluid leaks under pressure may not always be visible. Check for pin hole leaks with a piece of cardboard, not your hand.

Electrical System

CAUTION

To prevent damage to battery and/or electrical system:

- **Always disconnect the negative battery cable first.**
- **Always connect the positive battery cable first.**

When the negative cable is installed, a spark will occur if contact is made between the positive side of the battery and a metal surface on the machine. This can cause electrical system damage, battery explosion, and personal injury.

Total System

WARNING

ENGINE COOLANT LEVEL MUST BE CHECKED ONLY AFTER ENGINE HAS COOLED. IF RADIATOR CAP IS REMOVED WHILE THE COOLANT IS AT NORMAL OPERATING TEMPERATURE, PRESSURE WITHIN THE COOLANT SYSTEM WILL FORCE HOT LIQUID OUT THROUGH THE FILLER OPENING AND MAY CAUSE SEVERE SCALDING.

Failure to perform preventive maintenance at recommended intervals may result in the unit being operated with a defect that could result in injury or death of the operator.

CAUTION

Immediately report to your supervisor any defect or malfunction. Any defect shall be repaired prior to continued use of the aerial work platform.

Inspection and maintenance should be performed by qualified personnel familiar with the equipment.

Machine Components Locations

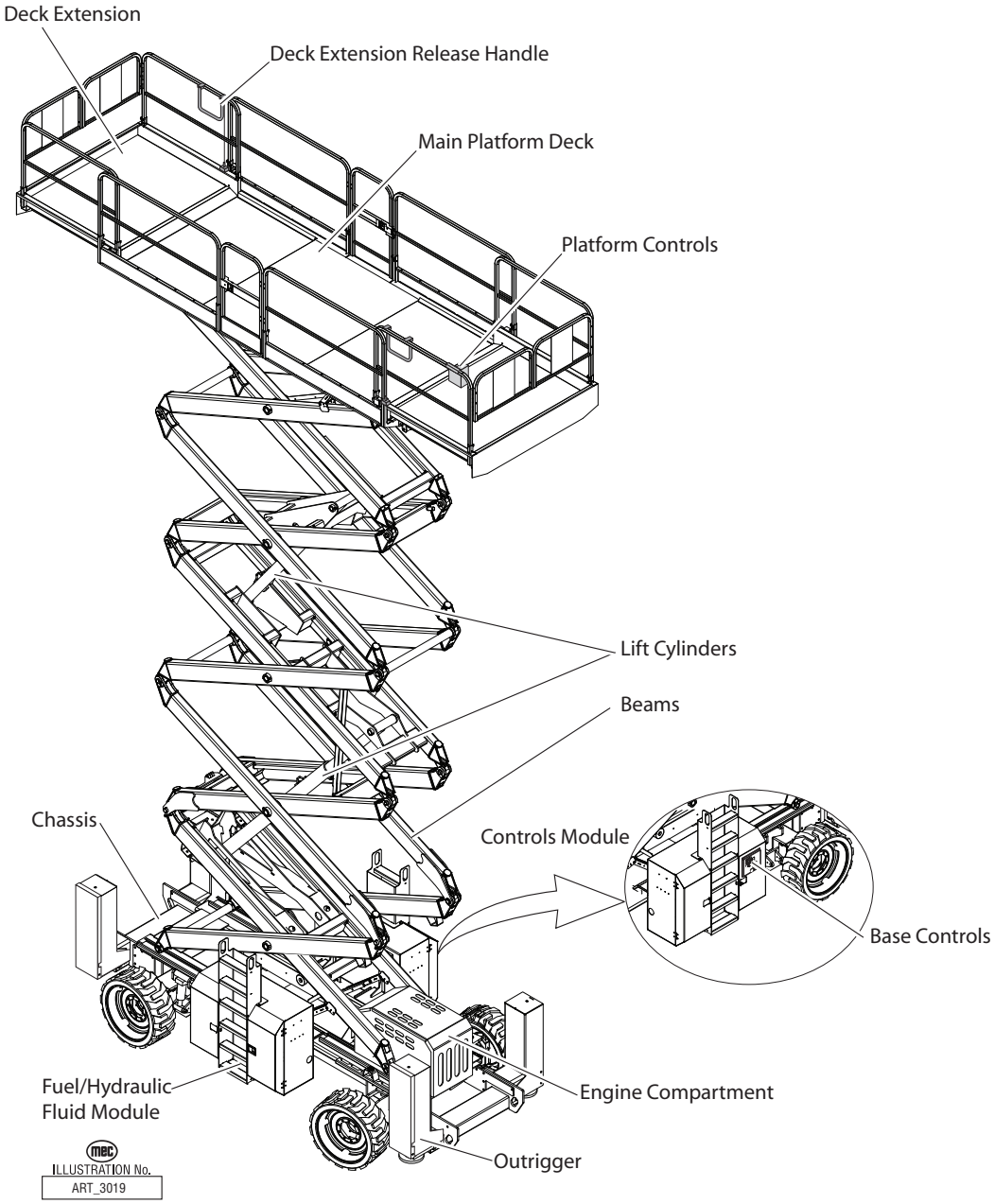

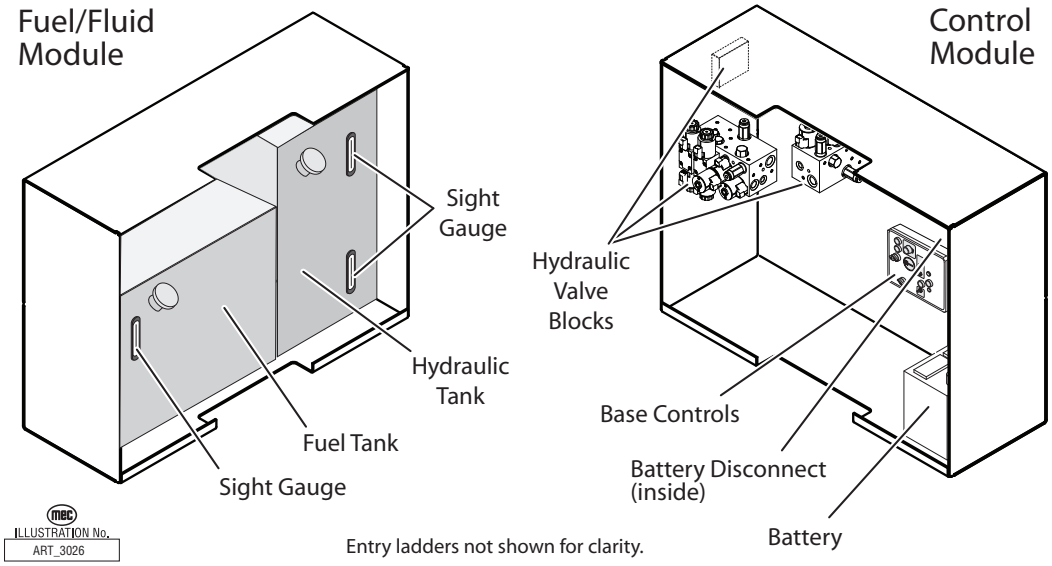

Entry ladders not shown for clarity.

Emergency Systems And Procedures

WARNING

IF THE CONTROL SYSTEM FAILS WHILE THE PLATFORM IS ELEVATED, HAVE AN EXPERIENCED OPERATOR USE THE EMERGENCY LOWERING PROCEDURE TO SAFELY LOWER THE PLATFORM.

DO NOT ATTEMPT TO CLIMB DOWN ELEVATING ASSEMBLY.

Emergency Stop

The machine is equipped with an EMERGENCY STOP switch on both control panels.

- Press the EMERGENCY STOP switch at any time to stop all machine functions.
- Turn switch clockwise to reset.

Selector Switch Set To Platform

- Either switch will stop all machine functions.
- Both switches must be reset or machine will not operate.

Selector Switch Is Set To Base

- The upper controls are locked out.
- The lower controls switch must be reset or the machine will not operate.
- The machine will operate from the lower controls if the upper controls switch is tripped.

Emergency Lowering

The Emergency Lowering System is used to lower the platform in case of power failure. The Emergency Lowering switch will continue to function if the EMERGENCY STOP switch is tripped.

To lower the platform, perform the following steps:

- Push and hold the toggle switch down to lower the platform.
- Once the platform is fully lowered, release the toggle switch.

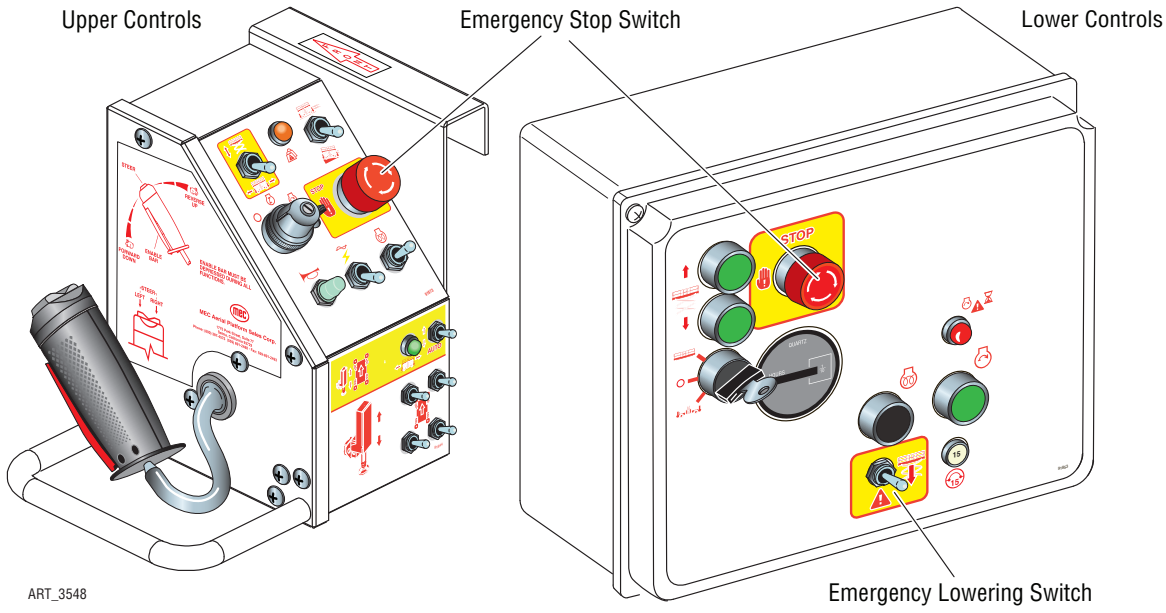

Brake Release And Towing

The machine can be winched or moved short distances in case of power failure at speeds not to exceed 5 MPH (8.05 km/h). Before towing or winching the machine, it is necessary to release the brake. Reset the brakes after winching or towing.

DANGER

AFTER DISENGAGING BRAKES THERE IS NOTHING TO STOP THE MACHINE'S TRAVEL. MACHINE WILL ROLL FREELY ON SLOPES. BE ON GUARD AGAINST RUNAWAY.

PRIOR TO MANUALLY RELEASING BRAKES, INSURE WHEELS ARE CHOCKED TO PREVENT UNINTENTIONAL MOVEMENT.

Disengage Brakes Before Towing Or Winching

- Chock the wheels.
- Remove the Brake Engage Cap and reinstall with the bump facing inward on all four (4) hubs.

Engage Brakes Before Driving

- Remove the Brake Engage Cap and reinstall with the bump facing outward on all four (4) hubs.

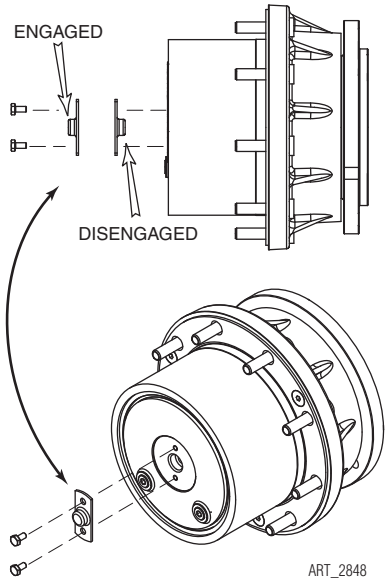

Lift And Support The Machine

DANGER

DEATH OR SERIOUS PERSONAL INJURY MAY RESULT FROM THE USE OF SUBSTANDARD LIFTING DEVICES AND/OR JACK STANDS. ENSURE THAT ALL LIFTING DEVICES AND JACK STANDS ARE OF ADEQUATE CAPACITY AND IN GOOD WORKING CONDITION BEFORE USE.

The following are needed to safely lift and support the machine;

- A jack with a lifting capacity of five (5) tons or more.
- Jack stands with a rating of five (5) tons or more.

To Raise The Machine

1. Move machine to a firm level surface capable of supporting the weight of the machine.
2. Chock the tires on the end of machine opposite the end to be raised.
3. If wheel is to be removed, break loose but do not remove lug nuts before raising the machine.
4. Position a jack at the end of the machine to be lifted, under a solid lifting point in the center of the frame.
5. Raise the machine and place two (2) suitable jack stands under solid support points at the outer ends of the frame.
6. Lower the machine to rest on the jack stands and inspect for stability.

To Lower The Machine

1. Tighten lug nuts to hold the wheel snug to the hub. Do not torque the lug nuts at this time.
2. Raise machine slightly and remove jack stands.
3. Lower the machine and remove the jack.
4. Tighten lug nuts to proper torque (refer to machine specifications).
5. Remove chocks.

Transporting The Machine

Safety Information

WARNING

THIS INFORMATION IS PROVIDED FOR REFERENCE AND DOES NOT SUPERSEDE ANY GOVERNMENT OR COMPANY POLICY REGARDING THE LOADING, TRANSPORT OR LIFTING OF MEC MACHINERY.

DRIVERS ARE RESPONSIBLE FOR LOADING AND SECURING MACHINES, AND SHOULD BE PROPERLY TRAINED AND AUTHORIZED TO OPERATE MEC MACHINERY.

DRIVERS ARE ALSO RESPONSIBLE FOR SELECTING THE CORRECT AND APPROPRIATE TRAILER ACCORDING TO GOVERNMENT REGULATIONS AND COMPANY POLICY.

DRIVERS MUST ENSURE THAT THE VEHICLE AND CHAINS ARE STRONG ENOUGH TO HOLD THE WEIGHT OF THE MACHINE (SEE THE SERIAL NUMBER PLATE FOR MACHINE WEIGHT).

Driving Or Winching Onto Or Off Of A Transport Vehicle

WARNING

MEC DOES NOT RECOMMEND UNASSISTED LOADING OR UNLOADING.

ALWAYS ATTACH THE MACHINE TO A WINCH WHEN LOADING OR UNLOADING FROM A TRUCK OR TRAILER BY DRIVING.

Refer to the Operator's Manual for loading, unloading, driving and operating instructions.

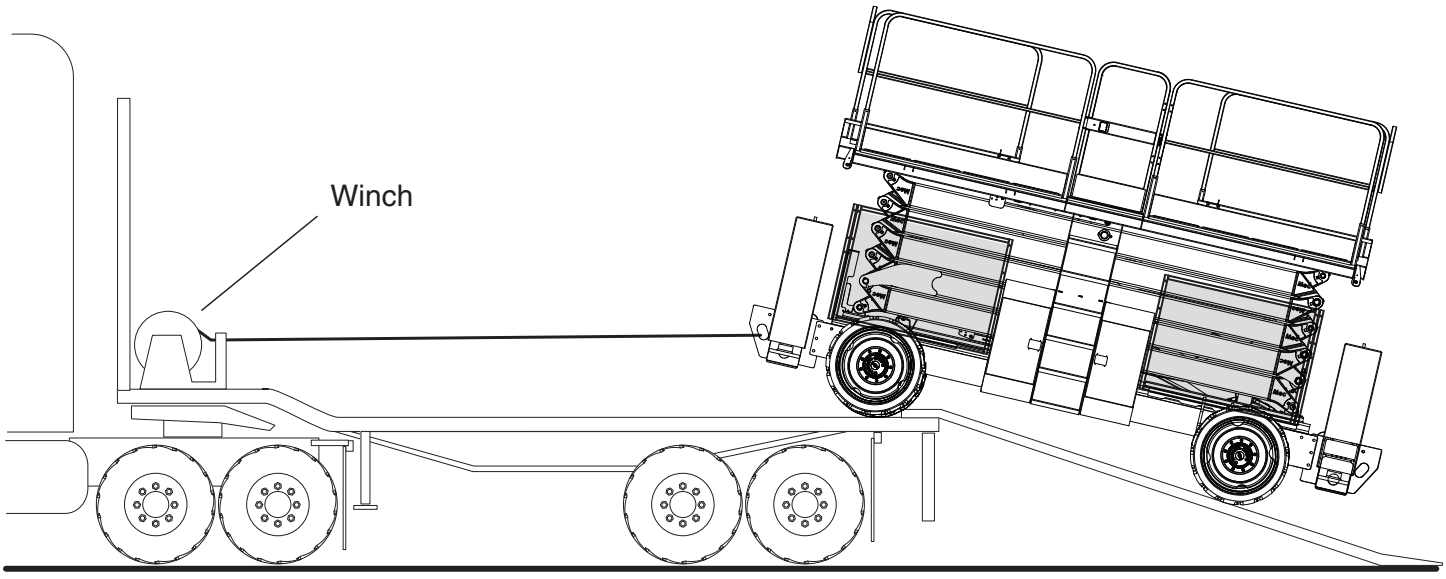

ART_3280

Hydraulic System – General

The hydraulic integrated system is designed to control all or part of machine functions by integrating various hydraulic cartridge valves into three manifolds to provide directional, pressure, flow, and load control.

The drive system is a hydrostatic type. Hydraulic fluid is provided by a variable displacement, axial piston-type Drive Pump which is directly coupled to the engine. All other functions are operated by a fixed displacement gear-type Functions Pump mounted to the piston pump. As the engine turns, the hydraulic pumps draw fluid from the reservoir and pump this fluid to the valve manifolds.

Each function has a maximum pressure control limit set by pressure relief valves.

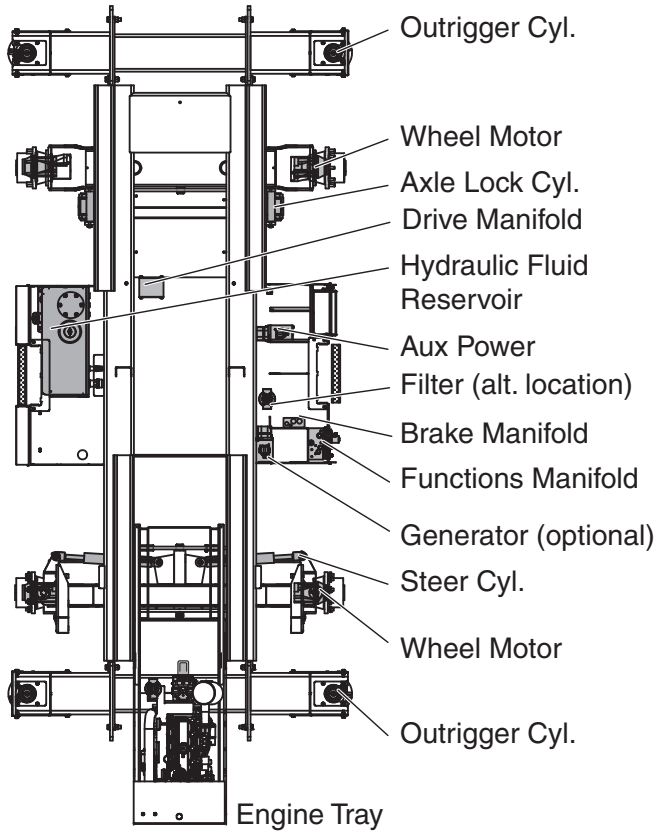

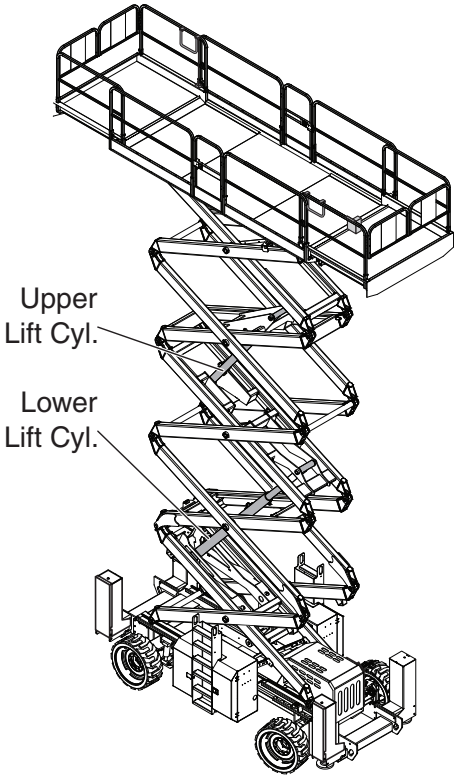

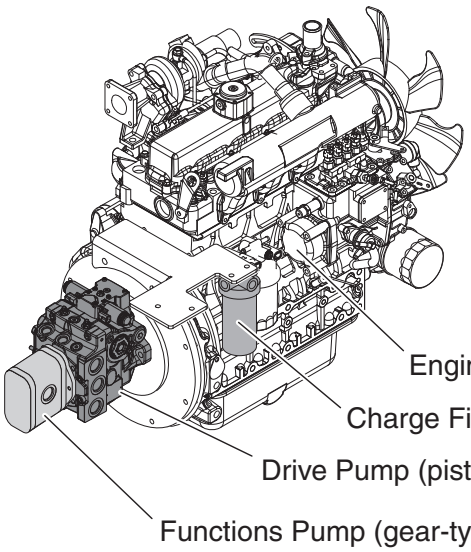

ILLUSTRATION No.
ART_3586

Hydraulic Roadmap

Hydraulic Reservoir

- Hydraulic fluid is held in the reservoir for delivery to the pumps and is returned to the reservoir after use. Returning hydraulic fluid is routed through a filter before entering the reservoir. The reservoir also serves as the oil cooling device.

Drive Pump

- The piston-type Drive Pump with infinitely variable proportional control delivers hydraulic fluid under pressure to the Drive and Brake Manifolds.

Functions Pump

- The gear-type Functions Pump delivers hydraulic fluid under pressure to the Functions Manifold.

Drive Manifold

- The Drive Manifold directs hydraulic fluid to the Wheel Motors and contains valve circuitry that improves performance on slippery surfaces.

Brake Manifold

- The Brake Manifold provides hydraulic pressure needed to release the brakes and actuate the high speed setting on the Wheel Motors, and controls the Axle Lock Cylinders.

Functions Manifold

- The Functions Manifold directs the hydraulic fluid to the Lift, Outrigger and Steering Cylinders through the use of electronically-operated solenoid valves.

Wheel Motors

- There are four (4) two-speed hydraulic wheel motors to provide power to all four wheels. The wheel motors turn gear hubs with integral spring-held brakes. The brakes are released by hydraulic pressure from the Brake Manifold. A fixed orifice in each gear hub controls the deceleration rate and initiates a smooth stop.

Axle Lock Cylinders

- Two (2) hydraulic cylinders control the floating axle at the rear of the machine. When platform is elevated, the cylinders lock in place to increase machine stability. Each cylinder has an integral counterbalance valves for load-holding.

Steering System

- Two (2) hydraulic cylinders control steering.

Lift System

- The machine is equipped with one or two hydraulic lift cylinders. On 5492RT and 3392RT-T models, each cylinder has an integral counterbalance valves for load-holding. On 6092RT models, poppet-type valves hold the load.

Outrigger System

- Four hydraulic cylinders provide leveling capability from front to rear and side to side.

Auxiliary Power Unit -- 5492RT & 3392RT-T Models

- The Auxiliary Power Unit provides hydraulic fluid power to lower the platform in the event of

engine failure or emergency.

Generator System -- Optional

- If equipped, the generator is driven by a hydraulic motor which receives hydraulic fluid directly from the pressure port of the Functions Pump.

Hydraulic Fluid

Handling Precautions

PERSONS IN REGULAR CONTACT WITH MINERAL-BASED HYDRAULIC FLUID NEED TO BE AWARE OF THE IMPORTANCE OF THOROUGH HYGIENE AND THE PROPER METHODS FOR HANDLING MINERAL OILS, IN ORDER TO AVOID POTENTIAL HAZARDS TO HEALTH.

WARNING

IF MINERAL-BASED HYDRAULIC FLUID IS SPLASHED INTO THE EYES, IT MUST BE WASHED OUT THOROUGHLY USING ABUNDANT QUANTITIES OF WATER. SEEK MEDICAL ATTENTION IF IRRITATION PERSISTS.

HYDRAULIC FLUID UNDER PRESSURE CAN PENETRATE AND BURN SKIN, DAMAGE EYES, AND MAY CAUSE SERIOUS INJURY OR BLINDNESS.

FLUID LEAKS UNDER PRESSURE MAY NOT ALWAYS BE VISIBLE.

Fluid Recommendations

MEC recommends hydraulic fluids listed in the chart below, and each only in the operating temperatures listed in the chart. Do not substitute other fluids as pump damage may result, and use only the fluid appropriate to the ambient operating temperature.

Recommended Hydraulic Fluid	
> 30° F (0° C)	Chevron 1000THF
0° F (-18° C) ~ 30° F (0° C)	Chevron Rando Premium MV
< 0° F (-18° C)	Chevron Rando Premium MV

System Flushing Procedure

1. With platform fully down, drain hydraulic fluid from hydraulic reservoir into a clean, empty container.
2. When the hydraulic reservoir is empty, remove suction strainer and hoses.
3. Remove the filter elements.
4. Flush the hoses with clean hydraulic fluid.
5. Discard old filter elements and replace.
6. Flush out the reservoir with hoses removed from the hydraulic reservoir.
7. Reinstall all hoses removed in the previous steps.
8. Fill hydraulic reservoir with filtered, fresh hydraulic fluid. Use only the appropriate hydraulic fluid as recommended in “Fluid Recommendations” on page 18.
9. Loosen output hose fittings at the Functions Pump to flood with hydraulic fluid. Tighten fittings.
10. Perform the “Drive Pump Start-Up Procedure” on page 22.

CAUTION

DO NOT operate the Drive Pump until you have completed the "Drive Pump Start-Up Procedure" on page 22.

Severe damage will occur.

11. Start up the machine. Briefly operate all functions. Two or three lift cycles may be necessary to purge all air from lift cylinder(s).
12. When the above procedures have been completed, lower the platform to the stowed position, completely retract all outriggers, then fill hydraulic reservoir to the full mark on sight gauge.
13. Check for leaks and correct as necessary. Machine is now ready to be placed into operation.

Hydraulic Fluid Reservoir

The Hydraulic Fluid Reservoir Assembly consists of the reservoir, a filler cap with breather, a drain plug, a sight gauge, and a bypass filter with a 10 micron filter element. On early machines this filter was located remotely in the Controls Module.

Check reservoir for signs of leakage weekly.

Hydraulic Filters

Early 5492RT models were assembled with a Filter Assembly located in the Controls Module and no filter in the Hydraulic Reservoir. All later machines have the filter element in the Hydraulic Reservoir.

Additionally, all machines have a Filter Assembly attached to the engine.

When the filter is clogged, hydraulic flow bypasses the filter element.

Replace all filter elements every six (6) months or 500 hours. Extremely dirty conditions may require that the filter be replaced more often.

WARNING

BEWARE OF HOT FLUID. CONTACT WITH HOT FLUID MAY CAUSE SEVERE BURNS.

Hydraulic Pumps

Note: Refer to Section 19 - Hydraulics.

An internal combustion engine drives the Drive Pump and the Functions Pump.

The Drive Pump is a variable displacement axial piston pump that provides hydraulic power to the Drive Manifold.

The Functions Pump is a gear pump that provides hydraulic power to the Functions Manifold.

Remove

1. Turn the Battery Disconnect Switch (inside Control Module) to the OFF position.
2. Place a large container under the engine and pump to catch fluid that will be lost during pump replacement. Dispose of used fluid properly.
3. Tag and disconnect hydraulic hoses, and IMMEDIATELY cap or cover the openings to prevent contamination.
4. Remove the two (2) bolts that hold the gear pump to the piston pump. Remove the gear pump.
5. Remove the two (2) bolts that hold the piston pump to the housing. Remove the piston pump.
6. Installation is reverse of removal. Apply one (1) drop of Loctite® to mounting bolts.

CAUTION

DO NOT operate the Drive Pump until you have completed the "Drive Pump Start-Up Procedure" on page 22.

Severe damage will occur.

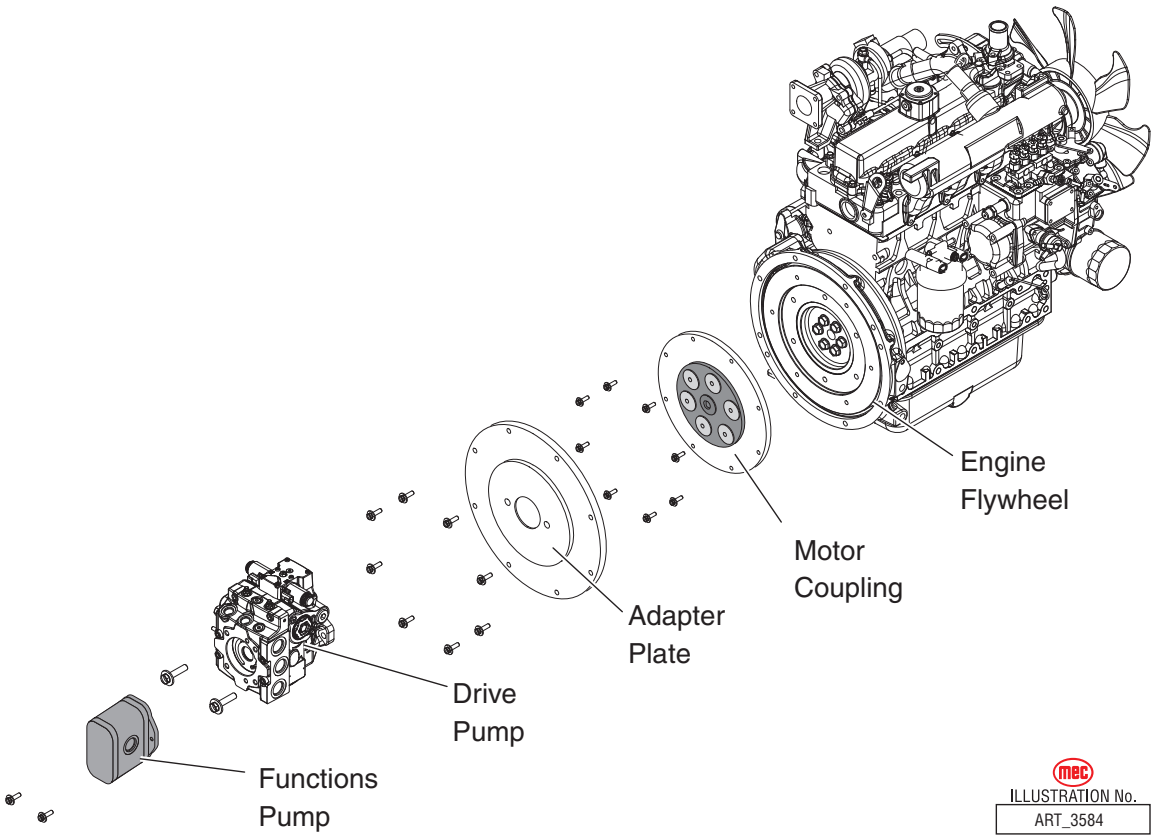

Drive Pump

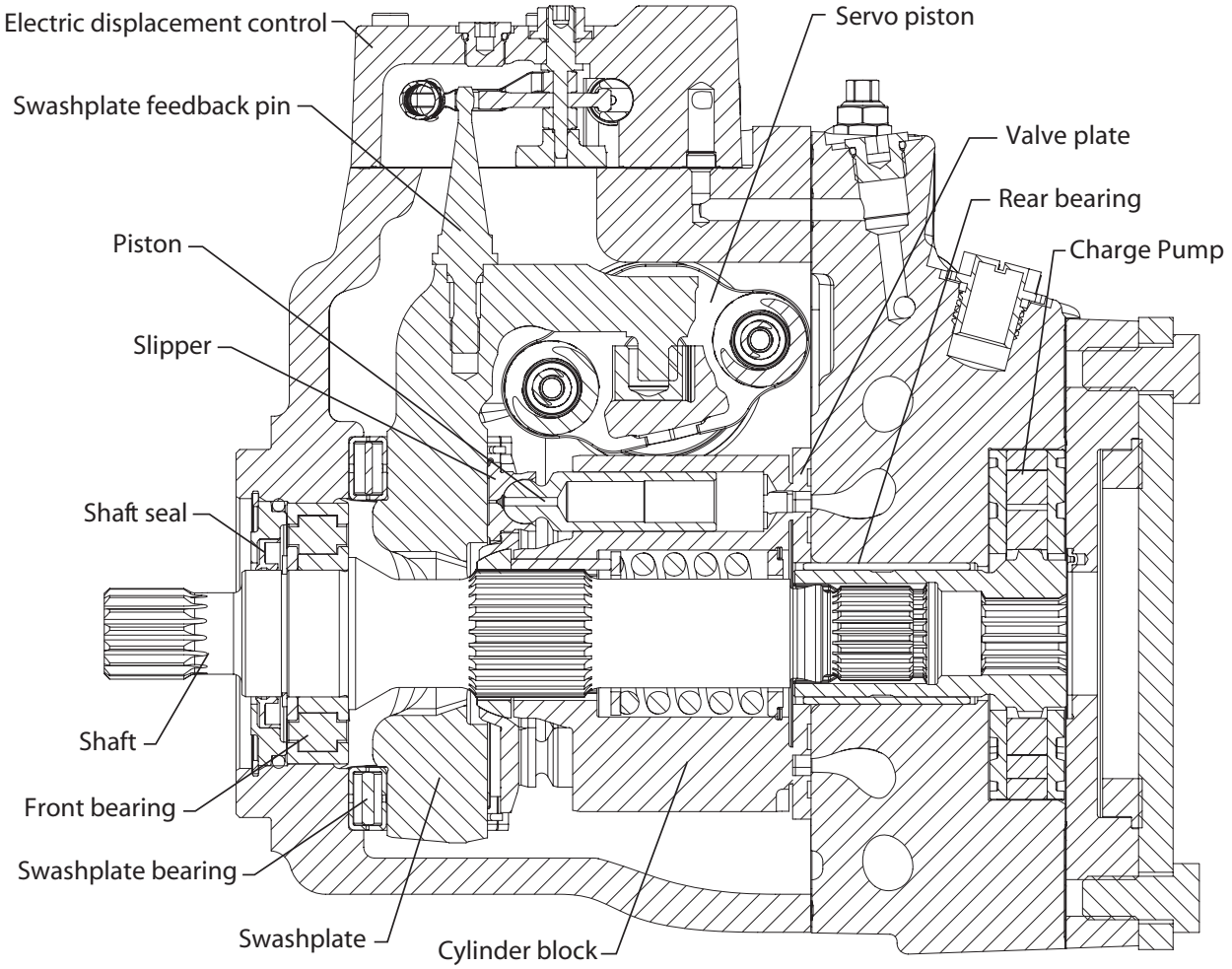

Pump Port	Connection
A	out to Drive Manifold A
B	out to Drive Manifold B
S	Suction -- in from Tank
E	in from Charge Filter
F	out to Charge Filter
MA	out to Brake Manifold A
MB	out to Brake Manifold B
M3	out to Brake Manifold CP
L1	Case drain -- out to Tank

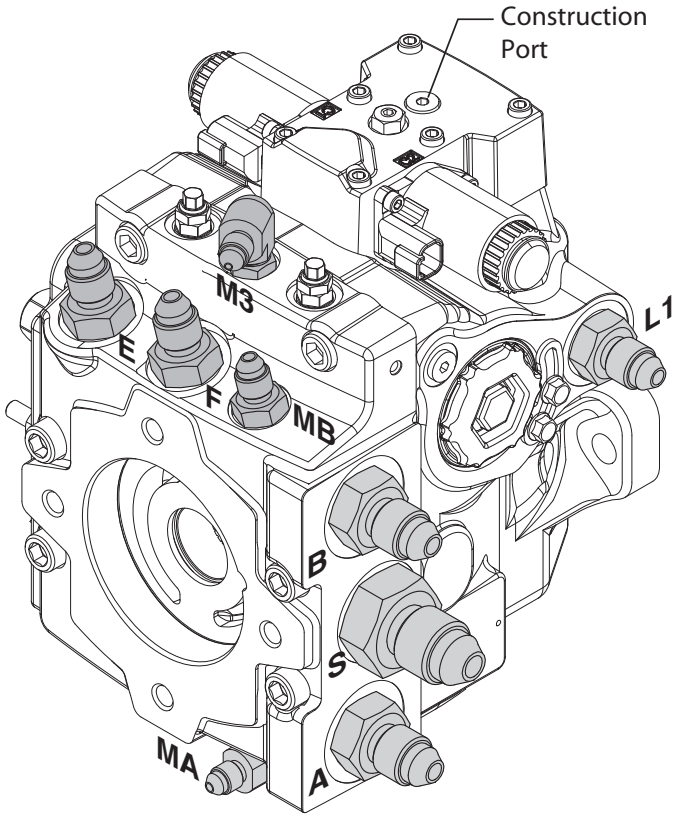

ILLUSTRATION No.
ART_3585

Drive Pump Start-Up Procedure

Follow this procedure when restarting a machine on which the Drive Pump has been:

- Removed and re-installed, or
- Drained of fluid for any reason.

WARNING

UNINTENDED MOVEMENT OF THE MACHINE OR MECHANISM MAY CAUSE INJURY. CHOCK THE WHEELS SECURELY BEFORE PERFORMING THIS PROCEDURE.

Inspect the pump for damage prior to installation. Use only the appropriate hydraulic fluid as recommended in “Fluid Recommendations” on page 18.

1. Ensure that the machine’s hydraulic oil and system components (reservoir, hoses, valves, fittings, and heat exchanger) are clean and free of any foreign material.
2. Install new system filter element(s) if necessary. Check that inlet line fittings are properly tightened and that there are no air leaks.
3. Install the pump. Do not yet connect the hose between port L1 and the hydraulic fluid tank.
4. Install a 1000 psi (50 bar) gauge in the pressure gauge port GCP on the Brake Manifold.
5. Fill the housing by adding filtered hydraulic fluid in port L1. Open the construction plug in the top of the control to assist in air bleed.
6. Fill the reservoir with hydraulic fluid. Use a 10-micron filler filter. Fill the inlet line from reservoir to pump.
7. Fill the hydraulic hoses that connect ports E and F to the charge filter.
8. Connect the hose between port L1 to the hydraulic fluid tank. Close the construction plug removed in step 4.

CAUTION

After start-up the fluid level in the reservoir may drop due to system components filling. Damage to hydraulic components may occur if the fluid supply runs out. Ensure reservoir remains full of fluid during start-up.

Air entrapment in oil under high pressure may damage hydraulic components. Check carefully for inlet line leaks.

Do not run at maximum pressure until system is free of air and fluid has been thoroughly filtered.

9. Disable the engine to prevent it from starting by disconnecting the fuel shutoff solenoid. Crank the starter for several seconds. Do not to exceed the engine manufacturer’s recommendation. Wait 30 seconds and then crank the engine a second time as stated above. This operation helps remove air from the system lines. Refill the reservoir to recommended full oil level.
10. When the gauge begins to register charge pressure, reconnect the fuel shutoff solenoid, then start engine. Let the engine run for a minimum of 30 seconds at low idle to allow the remaining air to work itself out of the system. Check for leaks at all line connections and listen for cavitation. Check for proper fluid level in reservoir.

11. When charge pressure rises above 160 psi (11 bar), increase engine speed to normal operating rpm to further purge residual air from the system.
12. Shut off the engine. Connect the pump control signal wires. Start the engine, checking to be certain pump remains in neutral. Run the engine at normal operating speed and carefully check for forward and reverse control operation.
13. Continue to cycle between forward and reverse for at least five minutes to bleed all air and flush system contaminants out of loop.

Note: Normal charge pressure fluctuation will occur during forward and reverse operation.

14. Check that the reservoir is full. Remove the pressure gauge.
15. The pump is now ready for operation.

Drive Pump Service

MEC does not recommend end-user maintenance or repair of the Sauer Danfoss hydraulic pump. Contact MEC or Sauer Danfoss for the nearest service provider.

Functions Pump

The Functions Pump is a fixed-displacement gear pump. Power to functions is controlled by the Proportional Valve (SP1), and unused flow if returned to the tank by the Flow Regulator (EPFR1).

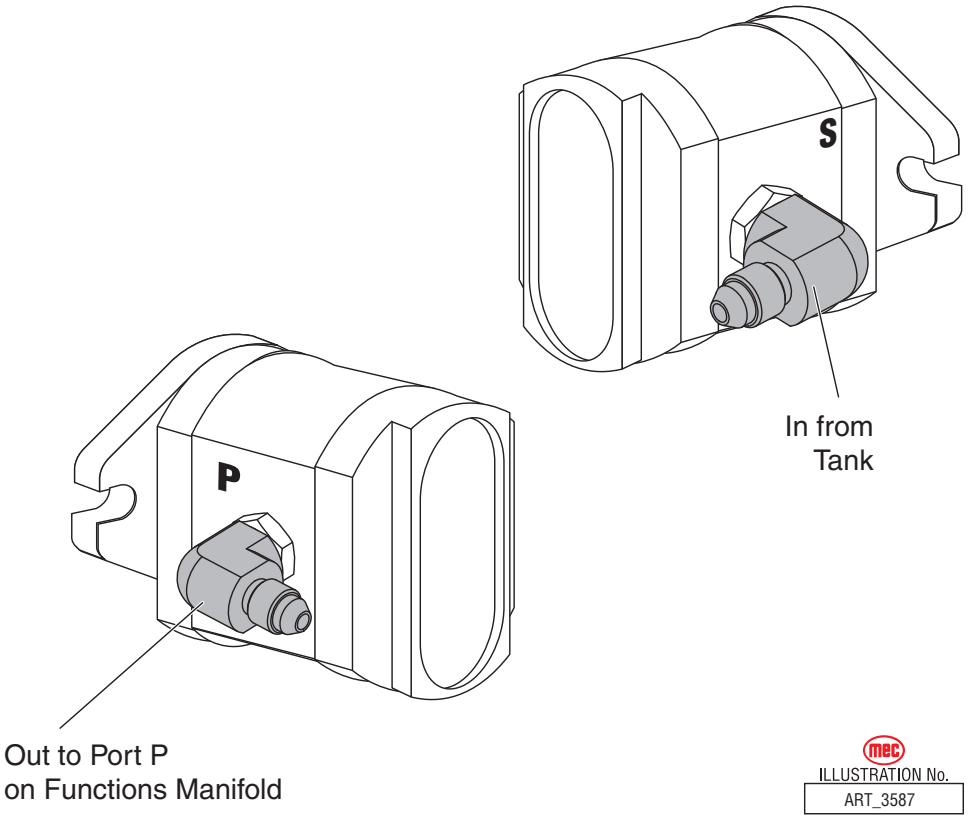

Hydraulic Manifolds

Note: Refer to Section 19 - Hydraulics.

This machine has three hydraulic manifolds: the Functions Manifold, the Brake Manifold and the Drive Manifold.

CAUTION

- **Clean all fittings before disconnecting hoses.**
- **Tag all hoses and wiring for proper reassembly.**
- **Plug all openings immediately to prevent contamination.**
- **Replace any O-rings and inspect all hoses for crack and damage before reassembly.**

Removal

1. Disconnect the negative battery terminal.
2. Tag and disconnect the solenoid valve electrical leads.
3. Tag and disconnect hydraulic hoses. Immediately cap the openings to prevent contamination.
4. Remove the bolts that hold the manifold to the mounting bracket.
5. Remove the manifold block.

Disassembly

1. Remove coils from solenoid valves.
2. Mark and remove valves.
3. Mark and remove fittings, plugs, springs, balls, and orifices.

Cleaning And Inspection

1. Wash the manifold in cleaning solvent to remove built-up contaminants, then blow out all passages with clean compressed air.
2. Inspect the manifold for cracks, thread damage and scoring where O-rings seal against internal and external surfaces.
3. Wash and dry each component and check for thread damage, torn or cracked O-rings, and proper operation.
4. Replace defective parts and O-rings.

Assembly

Note: Lubricate all O-rings before installation to prevent damage to the O-ring. Seat balls in manifold block by lightly tapping on the ball with a brass drift punch.

1. Install fittings, plugs, springs, balls, and orifices. Use one drop of Loctite #424 or equivalent thread locker on each screw-in orifice.
2. Install valves.

Installation

1. Attach manifold assembly to mounting plate with mounting bolts.
2. Connect solenoid leads as previously tagged.
3. Connect hydraulic hoses as previously tagged. Be certain to tighten hoses.

4. Connect the battery.
5. Operate each hydraulic function and check for leaks and for proper operation.
6. Adjust valve pressures.

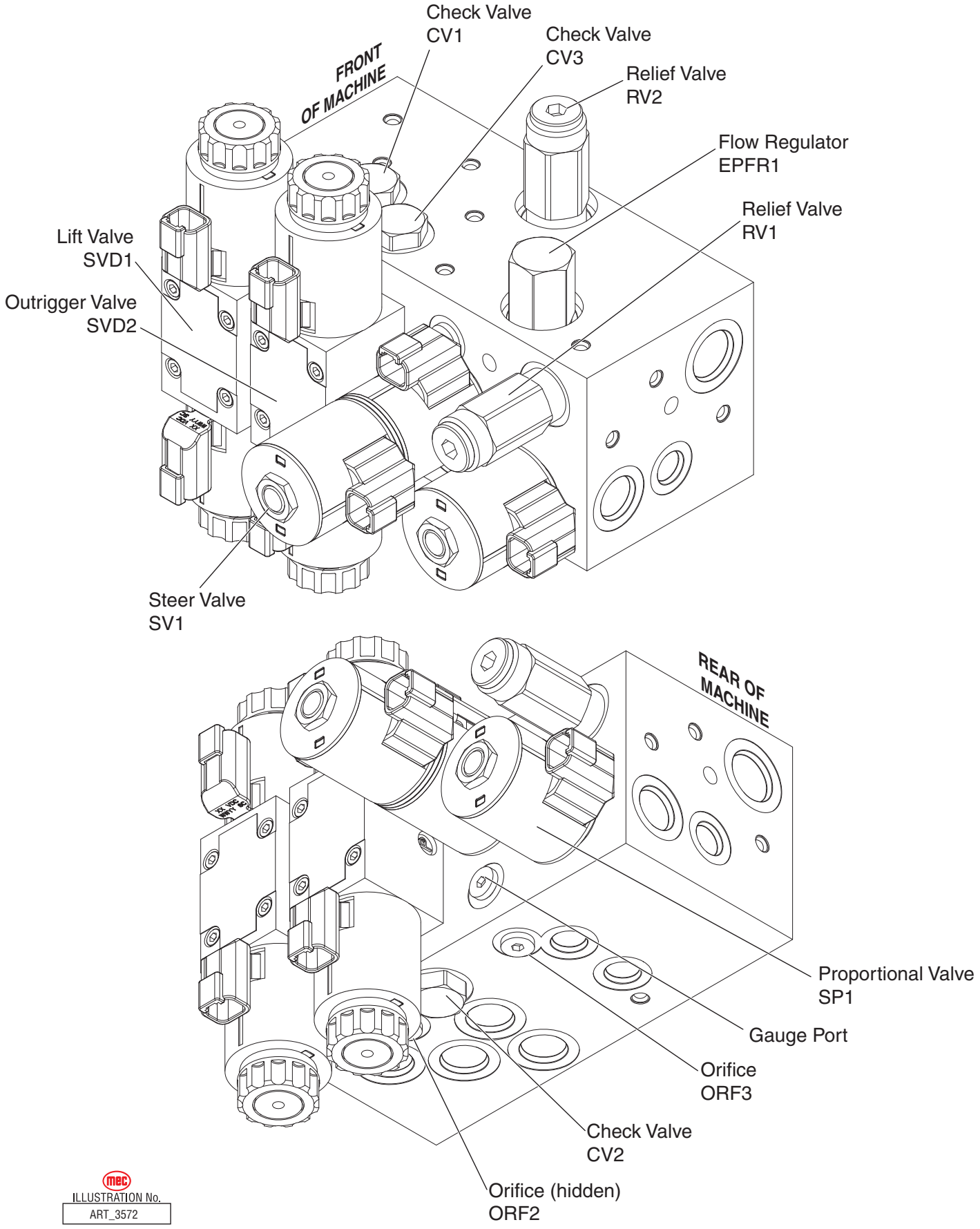

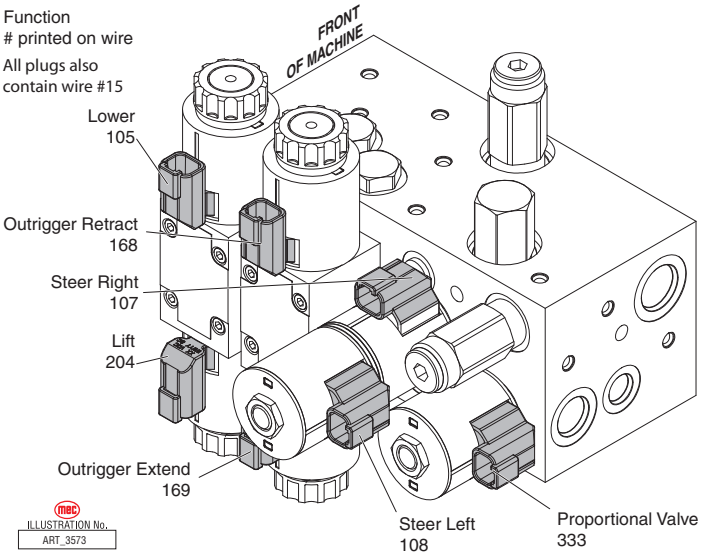
Function
printed on wire
All plugs also
contain wire #15
Lower
105
Outrigger Retract
168
Steer Right
107
Lift
204
Outrigger Extend
169
Steer Left
108
Proportional Valve
333
FRONT
OF MACHINE
ILLUSTRATION No.
ART_3573

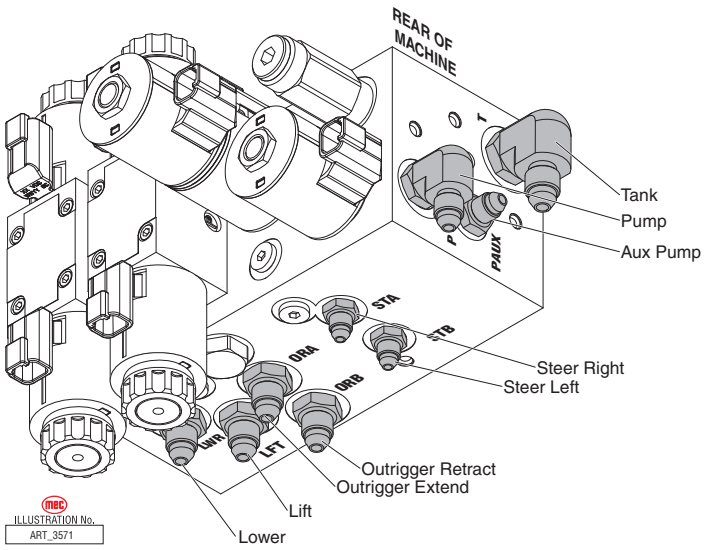
REAR OF
MACHINE
Tank
Pump
Aux Pump
Steer Right
Steer Left
Outrigger Retract
Outrigger Extend
Lift
Lower
ILLUSTRATION No.
ART_3571

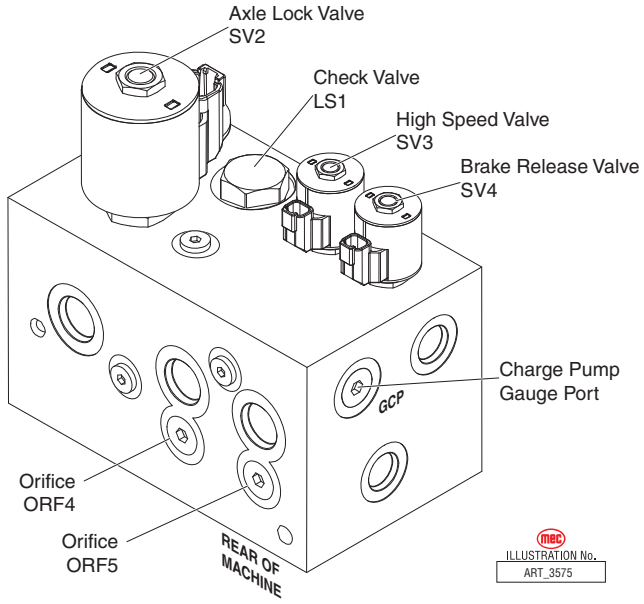
Axle Lock Valve
SV2
Check Valve
LS1
High Speed Valve
SV3
Brake Release Valve
SV4
Charge Pump
Gauge Port
Orifice
ORF4
Orifice
ORF5
REAR OF
MACHINE
ILLUSTRATION No.
ART_3575

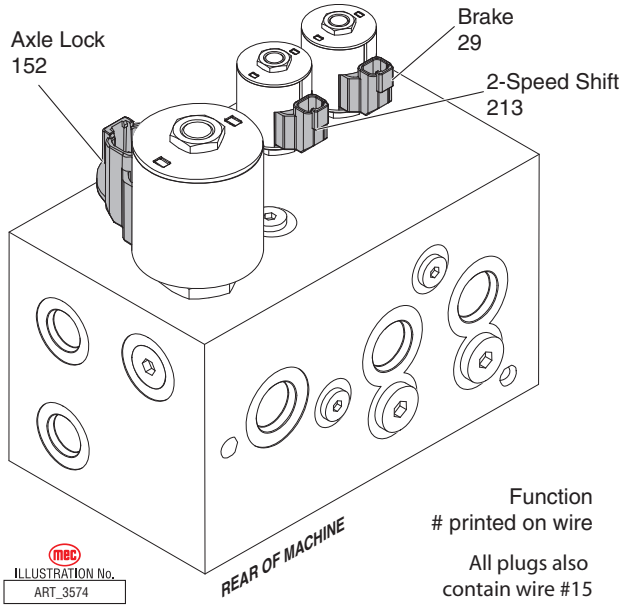
Axle Lock
152
Brake
29
2-Speed Shift
213
REAR OF MACHINE
ILLUSTRATION No.
ART_3574
Function
printed on wire
All plugs also
contain wire #15

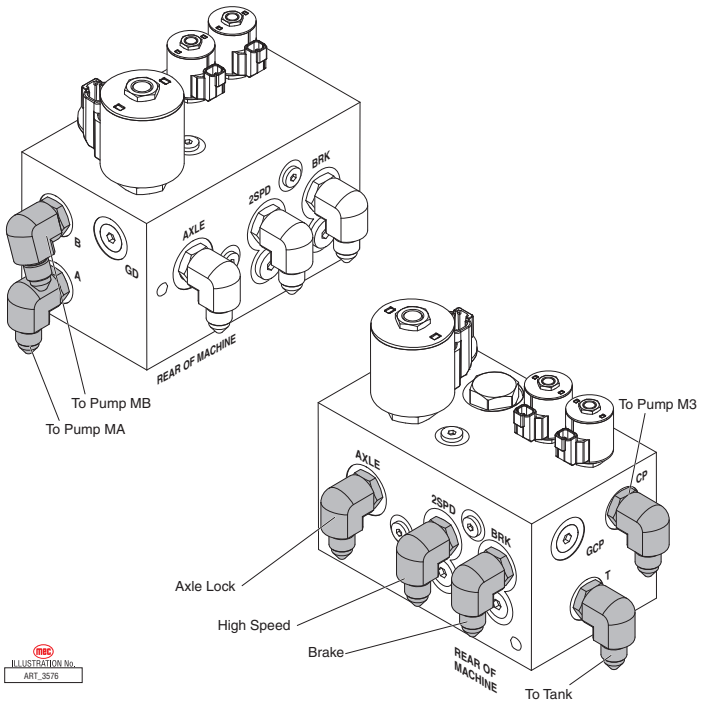
To Pump MB
To Pump MA
To Pump M3
Axle Lock
High Speed
Brake
To Tank
REAR OF MACHINE
ILLUSTRATION No.
ART_3576

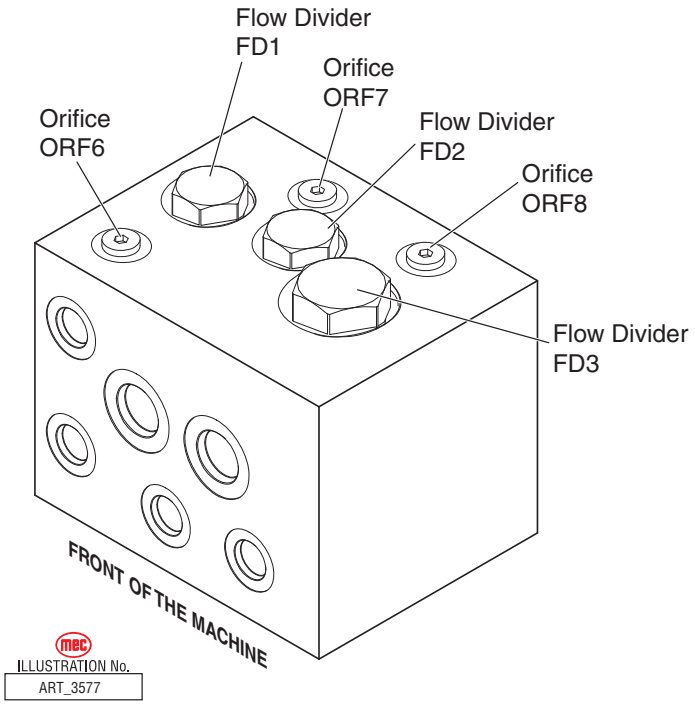
Flow Divider
FD1
Orifice
ORF7
Orifice
ORF6
Flow Divider
FD2
Orifice
ORF8
Flow Divider
FD3
FRONT OF THE MACHINE
ILLUSTRATION No.
ART_3577

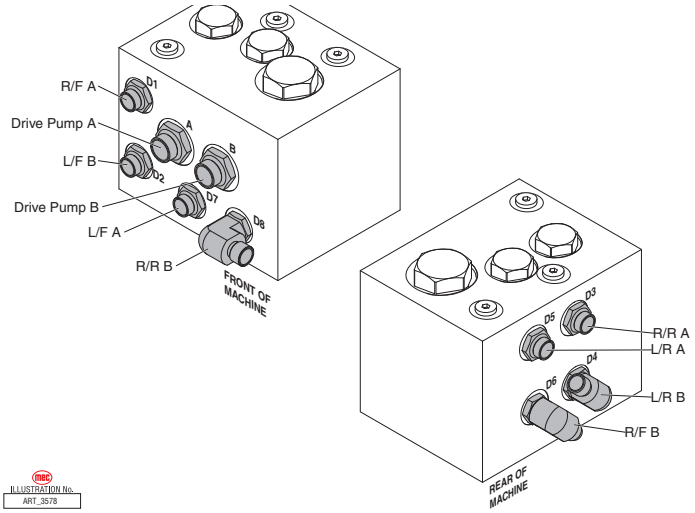

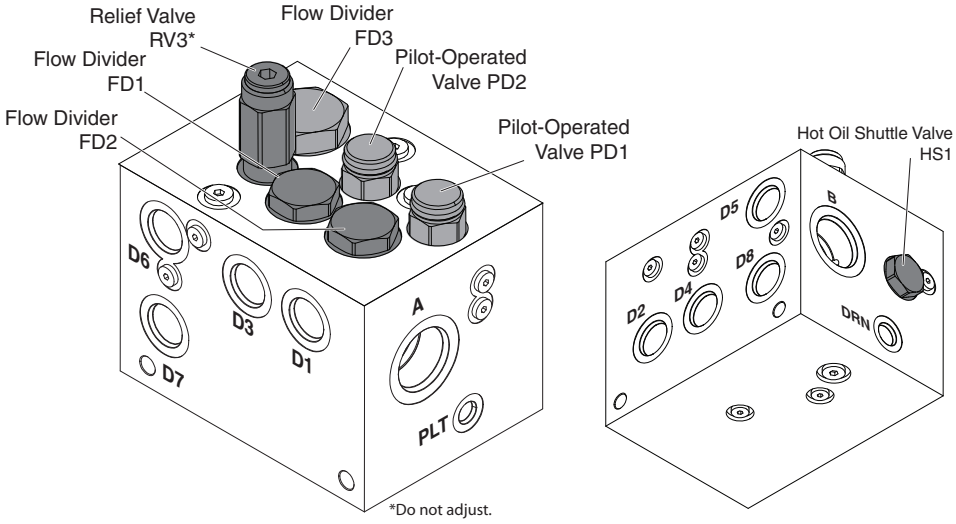

Components

Fitting Orientation

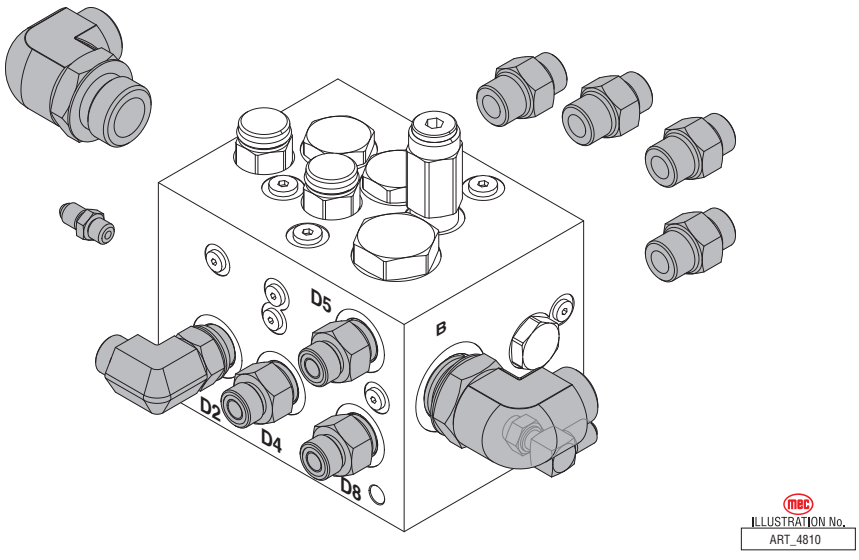

Hydraulic Pressure Adjustment

Before attempting to check and/or adjust pressure relief valves, operate the machine for 15 minutes or long enough to sufficiently warm the hydraulic fluid.

Insert a 0-5000 psi gauge onto the pressure test port on the valve manifold using gauge adapter fitting MEC part no. 8434

DRIVE	4,500 PSI / 310 bar
CHARGE	348 PSI / 24 bar
LIFT	3,000 PSI / 193 bar
STEER/OUTRIGGER	2,800 PSI / 193 bar

Adjusting Relief Valves

- Remove the tamper proof cap.
- Turn adjustment screw “IN” to increase pressure.
- Turn adjustment screw “OUT” to decrease pressure.
- When correct pressure is obtained replace tamper proof cap with a new one.

CAUTION **Do not operate pump with tamper proof cap removed. Fluid will emit under pressure.**

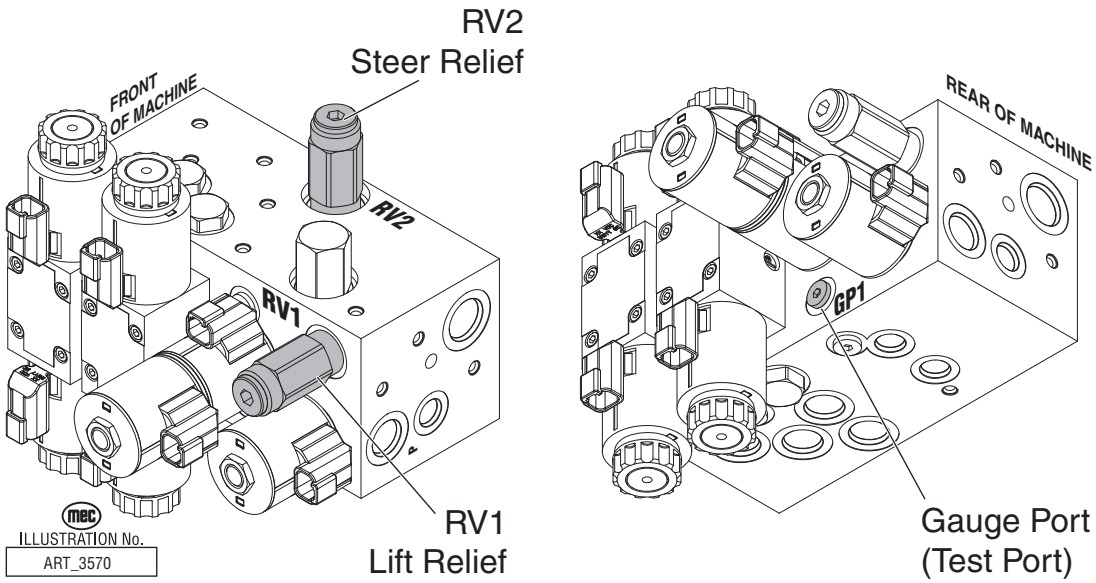

Adjustments

Counterbalance Valves

The counterbalance valves, located on the lift and axle lock cylinders of the 5492RT, are set by the manufacturer and should not be adjusted for any reason.

Replace any counterbalance valve that shows evidence of adjustment or tampering.

Lift Relief (RV1)

The Lift Relief Valve (RV1) should be checked during routine maintenance to ensure proper lift capacity. It will be necessary to remove the cap from the relief valve if adjustment is necessary.

REMOVING THE CAP WHILE THE ENGINE IS RUNNING WILL RESULT IN FLUID LEAKAGE.

To check Lift Relief valve setting, park the machine on a firm level surface free from overhead obstructions.

Lift Relief Valve (RV1) should be set to 2800 psi (193 bar).
- Insert a 0-5000 psi gauge into the port GP of the Functions Manifold.
- Extend the platform to full height with no load on platform.
- Hold the switch for 10 seconds to get an accurate reading on the pressure gauge.
- If pressure is LOW, adjust lift relief valve ¼ turn clockwise and recheck.
- If pressure is HIGH, adjust lift relief valve ¼ turn counterclockwise and recheck.
- Repeat until correct.

Steering Relief (RV2)

The steering Relief Valve (RV2) should be checked during routine maintenance to ensure proper steering function. It is necessary to remove the cap from the relief valve if adjustment is necessary.

REMOVING THE CAP WHILE THE ENGINE IS RUNNING WILL RESULT IN FLUID LEAKAGE.

Steering Relief Valve (RV2) should be set to 2800 psi (193 bar).
- Insert a 0-5000 psi gauge into the port GP of the Functions Manifold.
- Energize the steering to full left.
- Hold the switch for 10 seconds to get an accurate reading on the pressure gauge.
- If pressure is LOW, adjust steering relief valve ¼ turn clockwise and recheck.
- If pressure is HIGH, adjust steering relief valve ¼ turn counterclockwise and recheck.
- Repeat until correct.

Drive Pump Adjustments

This section offers instruction on inspection and adjustment of pump components. Read through the entire topic before beginning a service activity.

CAUTION

Contamination can damage internal components and void your warranty.

Take precautions to ensure system cleanliness when removing and reinstalling system lines

---

Standard Procedures
1. With the engine off, thoroughly clean the outside of the pump.
2. If removing the pump, tag each hydraulic line. When you disconnect hydraulic lines, immediately cap them and plug each open port to prevent contamination.
3. Ensure the surrounding area is clean and free of contaminants like dirt and grime.

4. Inspect the system for contamination.
5. Check the hydraulic fluid for signs of contamination: oil discoloration, foam in the oil, sludge, or metal particles.
6. If there are signs of contamination in the hydraulic fluid, replace all filters and drain the hydraulic system. Flush the lines and refill the reservoir with the correct filtered hydraulic fluid.
7. Before re-installing the pump, test for leaks.
8. See the pump start-up procedure on page 22.

Charge Pressure Relief Valve Adjustment

This procedure explains how to check and adjust the charge pressure relief valve.

1. Install a 1000 psi (50 bar) pressure gauge in charge pressure gauge port GCP on the Brake Manifold. This gauge shows charge pressure.
2. Install a 100 psi (10 bar) gauge at case pressure port L1, L2, or L3. This gauge shows case pressure.
3. Operate the system with the pump in neutral (zero displacement) when measuring charge pressure.

Note: Ensure charge pressure is properly set before checking pressure limiter. See Section 10 - Hydraulic System.

4. The charge pressure relief valve setting for this pump is 348 psi (24 bar). This pressures assumes 1800 rpm pump speed, charge flow of 7 gal/min (26.5 l/min), and reservoir temperature of 120°F (50°C). The charge pressure references case pressure.

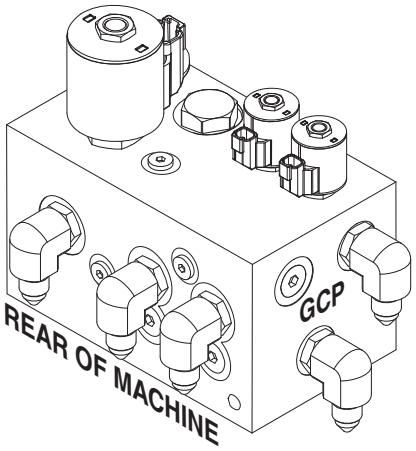

Brake Manifold

Note: At higher pump speeds or higher charge flows the charge pressure will rise over the rated setting.

5. Rotate the adjusting screw clockwise to increase the setting; counter clockwise to decrease it. Subtract the case pressure reading from the charge pressure reading to compute the actual charge pressure.

Note: Pressure change per turn is dependant on charge flow entering pump.

6. While holding the adjusting screw, torque locknut to 13 lb-ft (17 Nm).
7. When you achieve the desired charge pressure setting, remove the gauges and plug the ports.

Drive Pump

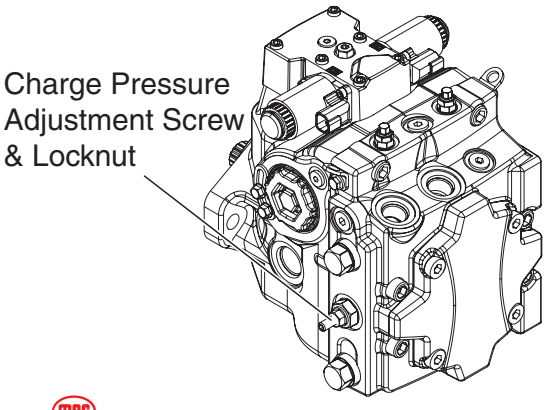

ILLUSTRATION No.
ART_3596

Pressure Limiter Adjustment

Note: Ensure charge pressure is properly set before checking pressure limiter.

At the Platform Controls, set the Speed/Torque Switch to HIGH SPEED (up).

Position the platform such that it cannot drive and the wheels cannot rotate.

WARNING

THIS PROCEDURE REQUIRE THAT THE DRIVE SYSTEM BE BROUGHT TO FULL PRESSURE WITH THE MACHINE IMMOBILIZED. THE MACHINE MUST BE SECURELY RESTRAINED BEFORE PERFORMING THIS PROCEDURE.

1. Install a 5000 psi (350 bar) pressure gauge in port GD of the Brake Manifold. Install a 1000 psi (50 bar) pressure gauge in port GCP of the Brake Manifold
2. Start the engine and run at idle.
3. Use a 17mm wrench to loosen the locknut.
4. Activate the Drive Joystick until pressure in the high side of the system loop stops rising. This pressure is the PL setting.
5. Release the Drive Joystick and adjust the PL setting using an internal hex wrench. Turn the adjusting screw clockwise to increase the PL setting, counter clockwise to decrease it. The adjustment is very sensitive. Change per full turn is approximately 2176 psi (150 bar).
6. Repeat steps four and five until pressure read 4500 psi (310 bar). After adjustment, torque the locknut to 9 lb/ft (12 Nm). Do not over torque.
7. Shut down the engine. Remove gauges and replace plugs.

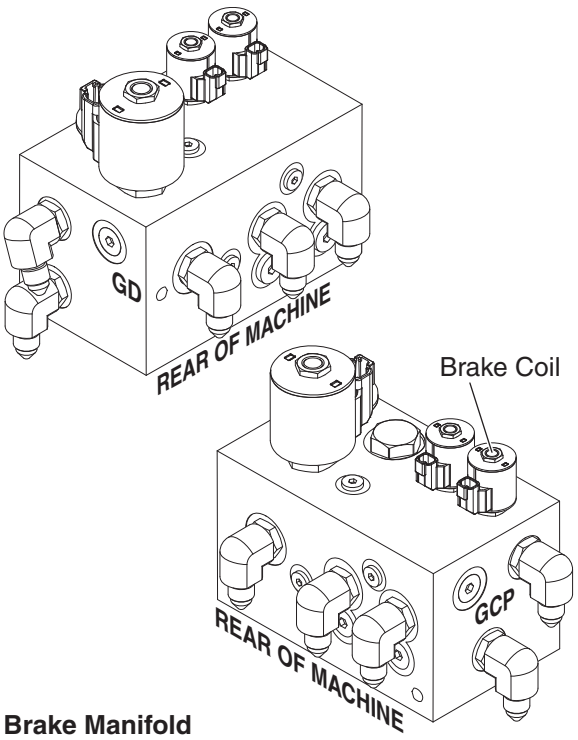

Brake Manifold

Drive Pump

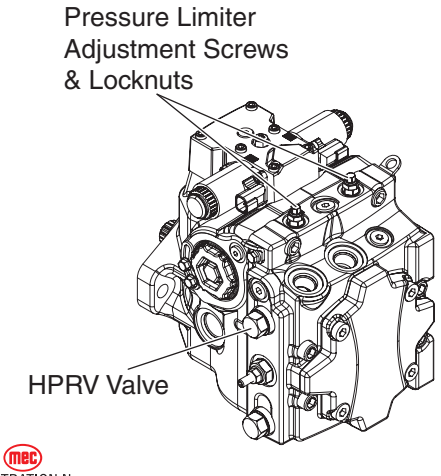

ILLUSTRATION No.
ART_3593

Control Neutral Adjustment

All functions of the Electric Displacement Control (EDC) are preset by the pump manufacturer. Adjust the pump to neutral with the pump running on the vehicle with the engine operating. If adjustment fails to give satisfactory results, it may be necessary to replace the control or coils.

WARNING

UNINTENDED MOVEMENT OF THE MACHINE MAY CAUSE INJURY TO THE TECHNICIAN OR BYSTANDERS. TO PROTECT AGAINST UNINTENDED MOVEMENT, SECURE THE MACHINE AGAINST MOVEMENT AND DISCONNECT THE BRAKE COIL WHILE SERVICING.

SEE PAGE 31 FOR LOCATION OF COIL.

1. Install a 1000 psi (50 bar) gauge in each of the two servo gauge ports (M4 and M5). Disconnect the external control input (electrical connections) from the control. Start the engine and operate at idle speed.
2. Use a 4mm internal hex wrench to hold the neutral adjusting screw stationary while loosening the locknut with a 13mm wrench.
3. Observe pressure gauges. If necessary, turn adjusting screw to reduce any pressure differential.
4. Rotate the neutral adjusting screw clockwise until the pressure increases on the gauge. Note the angular position of the wrench. Then rotate the neutral adjusting screw counter clockwise until the pressure increases by an equal amount on the other gauge. Again note the angular position of the wrench.
5. Rotate the neutral adjusting screw clockwise half the distance between the wrench positions noted above. The gauges should read the same pressure, indicating that the control is in its neutral position.

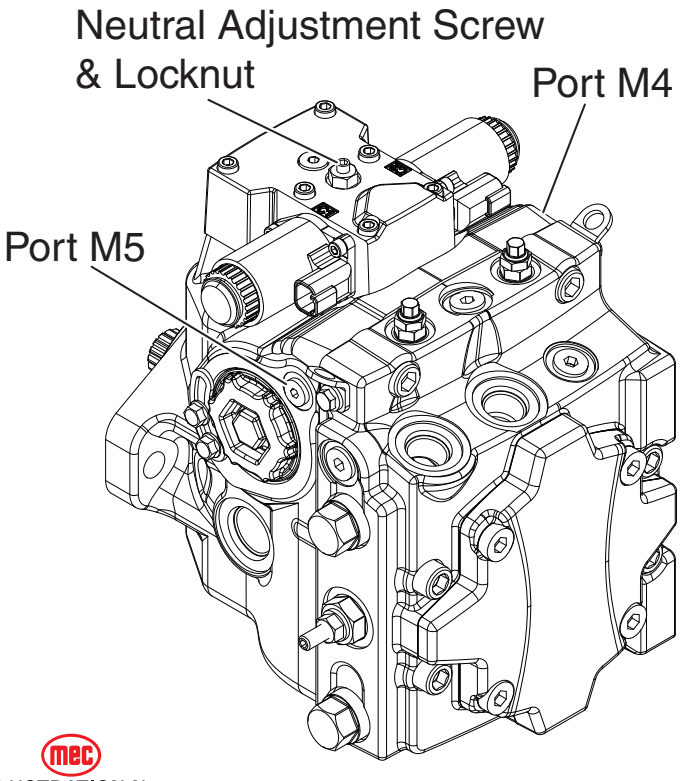

ILLUSTRATION No.
ART_3594

6. Hold the neutral adjusting screw stationary and tighten the lock nut. Torque to 7 lb/ft (10 Nm). Do not over-torque the nut.
7. When the neutral position is set, stop the engine, remove the gauges, and install the gauge port plugs. Reconnect the external control input.

Note: A small pressure differential of 22 psi (1.5 bar) or less is acceptable. Zero differential is usually not possible.

Mechanical Neutral Adjustment

Servo Adjustment

1. Run engine at 1800 rpm.
2. If using a PWM signal, ensure the signal is off. Check the servo pressure gauges. Ensure the differential between M4 and M5 is less than 22 psi (1.5 bar).
3. Using a 3/4 in hex deep socket, unthread both servo cylinders 2-3 turns. This step ensures the servo cylinders have no contact with the servo piston.
4. Stroke the pump by turning the control eccentric screw, or by supplying current to solenoid C1, until the servo pressure at port M4 is 1 to 2 bar [14– 29 psi] greater than at port M5 and the system pressure gauges indicate displacement. Pressure should be greater at port MB. This also indicates the servo piston is in contact with the servo cylinder on side M5.

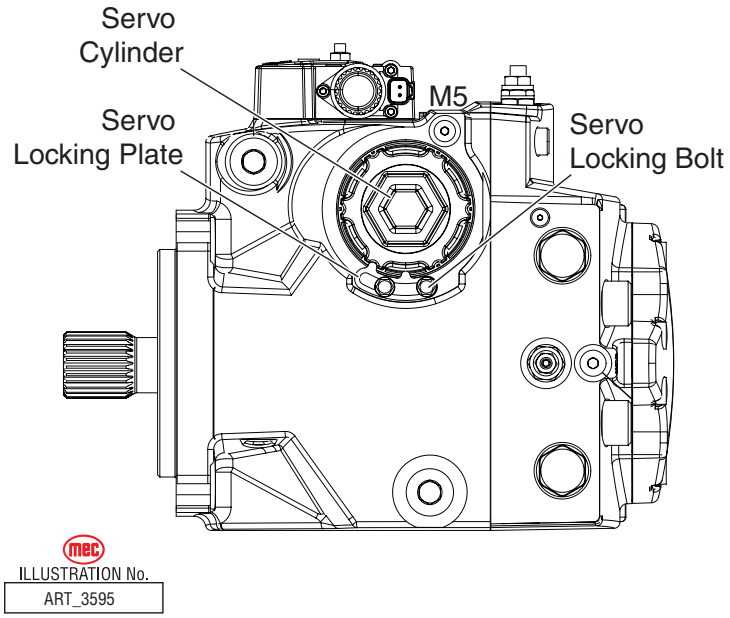

ILLUSTRATION No.
ART_3595

5. Slowly thread the servo cylinder on the M5 side in until the system pressure differential starts to decrease. Maintain servo pressure differential between 1-2 bar [14-29 psi] during this step. Continue turning the servo cylinder in until the system pressure differential (between ports MA/MB) is less than 22 psi (1.5 bar). This procedure sets the servo and swash plate to mechanical neutral on the M5 side.
6. Repeat steps 18 but stroke the pump in the opposite direction by turning the eccentric screw in the opposite direction, or by supplying current to solenoid C2. Reverse gauge locations (M4 for M5, MB for MA) from those stated above since the pump is now stroking the other direction.
7. Remove all gauges and replace gauge port plugs.

Verify Neutral Setting

1. If using a PWM signal to set mechanical neutral, check that servo pressure differential is less than 22 psi (1.5 bar). Refer to “Control Neutral Adjustment” on page 32.
2. To verify mechanical neutral, provide current to solenoid C1, or turn neutral adjustment screw, until the servo pressure differential is 3 bar [43 psi]. The system pressure differential must be below 22 psi (1.5 bar). Repeat test on solenoid C2 side.
3. The current required to set the servo pressure differential to 3 bar [43 psi] should be the same for each solenoid.
4. If using neutral adjustment screw to set mechanical neutral, reset control neutral. Refer to “Control Neutral Adjustment” on page 32.

Drive Function

Note: Refer to Section 12 - Mechanical Components for Remove and Install instructions.
Refer to Section 19 - Hydraulics.

There are four (4) variable-displacement hydraulic Drive Wheel motors that provide power to all four wheels.

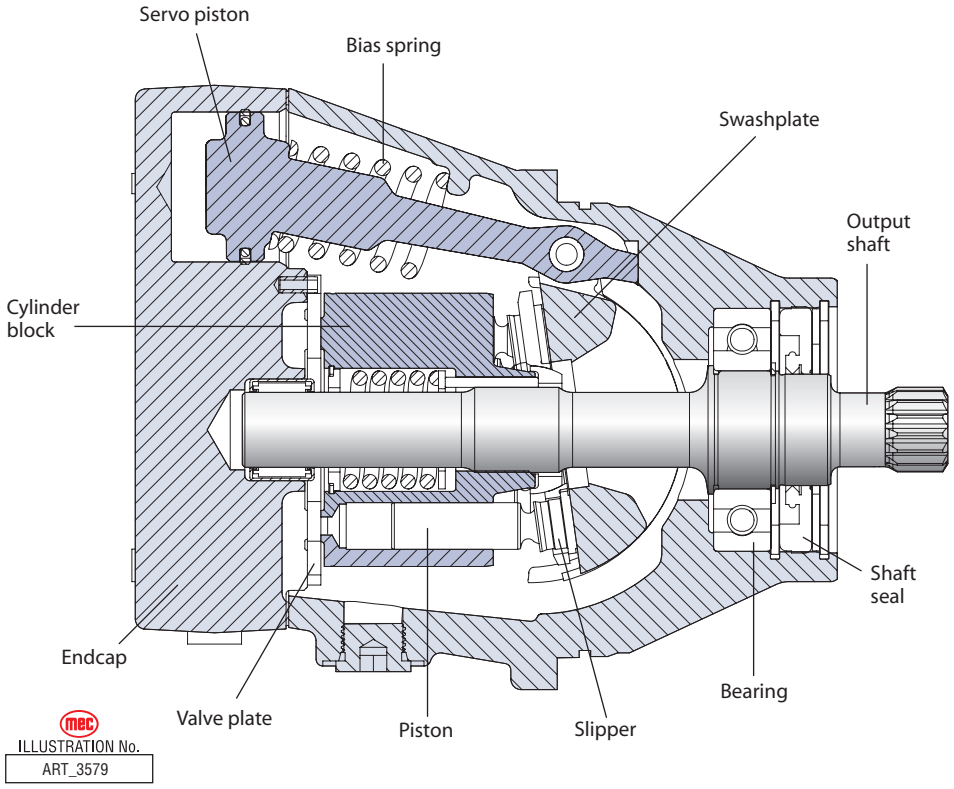

Wheel Motor Startup Procedure

Follow this procedure when restarting a machine on which the Drive Motors have been:

1. Removed and re-installed, or
2. Drained of fluid for any reason.

WARNING

UNINTENDED MOVEMENT OF THE MACHINE OR MECHANISM MAY CAUSE INJURY. SECURE THE MACHINE BEFORE PERFORMING THIS PROCEDURE.

CAUTION

If oil has drained from the Drive Pump, DO NOT operate the Drive Pump until you have completed the “Drive Pump Start-Up Procedure” on page 22.

Severe damage will occur.

Inspect each Drive Motor for damage prior to installation. Use only the appropriate hydraulic fluid as recommended in “Fluid Recommendations” on page 18.

1. Fill the reservoir with the appropriate hydraulic fluid as recommended in “Fluid Recommendations” on page 18. Always filter fluid through a 10 micron filter when pouring into the reservoir. Never reuse hydraulic fluid.
2. Fill the inlet line leading from the pump to the reservoir. Check the inlet line for properly tightened fittings and be certain it is free of restrictions and air leaks.
3. Fill the pump and motor housing with clean hydraulic fluid. Pour filtered oil directly into the upper most case drain port.
4. To ensure the pump and motor stay filled with oil, install case drain lines into the upper most case drain ports.
5. Install a 0 to 35 bar [0 to 500 psi] gauge in the pressure gauge port (M3) of the pump to monitor system pressure during start up.
6. Follow recommendations in the vehicle / machine operator’s manual for engine start up procedures.
7. While watching the pressure gauge, jog the engine or run at the lowest possible speed until system pressure builds to normal levels (minimum 11 bar [160 psi]). Once system pressure is established, increase to full operating speed. If system pressure is not maintained, shut down the engine, determine cause, and take corrective action.
8. Operate the hydraulic system for at least fifteen minutes under light load conditions.
9. Check and adjust pump control settings as necessary after installation.
10. Shut down the engine and remove the pressure gauge. Replace hose and fitting at the pressure gauge port.
11. Check the fluid level in the reservoir; add clean filtered fluid if necessary.
12. The motor is now ready for operation.

Repair

MEC does not recommend end-user maintenance or repair of the Sauer Danfoss drive motors. Contact MEC or Sauer Danfoss for the nearest service provider.

Axle Lock Function

Note: Refer to Cylinder Repair.
Refer to Section 12 - Mechanical Components for Remove and Replace instructions.
Refer to the Section 19 - Hydraulics for parts list.

There are two (2) cylinders in the floating axle system. These cylinders allow fluid to freely flow in and out while driving over rough terrain, provided that the platform is in the stowed position. When the platform is elevated, the electrically-operated valve in the manifold closes, preventing fluid flow and locking the cylinders.

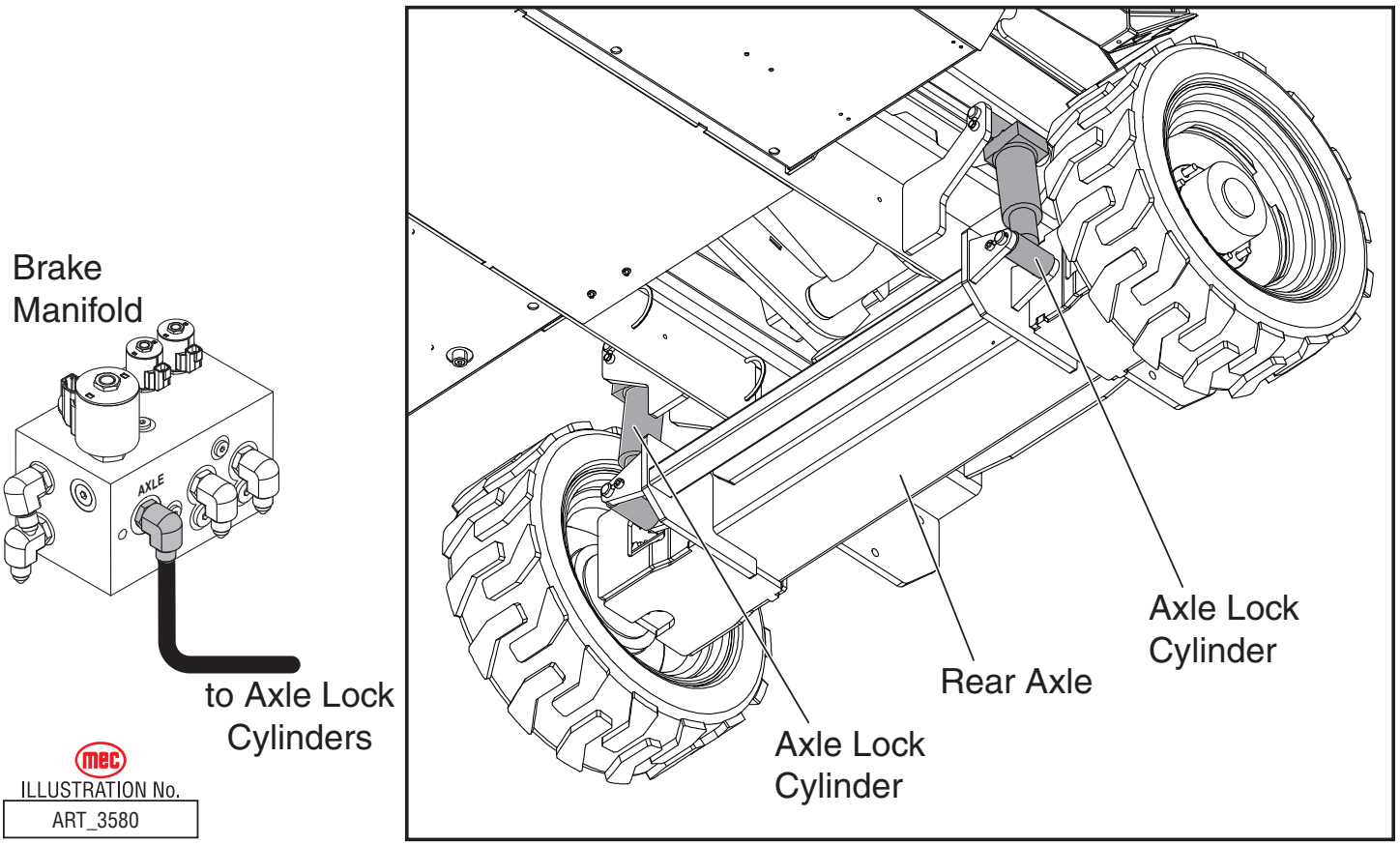

Steering Function

Note: Refer to Section 12 - Mechanical Components for Remove and Replace instructions.
Refer to Section 19 - Hydraulics for parts list and hose routing.

The steering system consists of the following components:

- The yokes have pivots on the top and bottom. These have mechanically linked together via a tie-rod.
- Steering is accomplished hydraulically by using two (2) double-acting cylinders, and a 4-way 3-position solenoid-operated, hydraulic directional control cartridge valve.
- Maximum steering pressure is limited by the steering relief valve (refer to Section 13 - Troubleshooting).

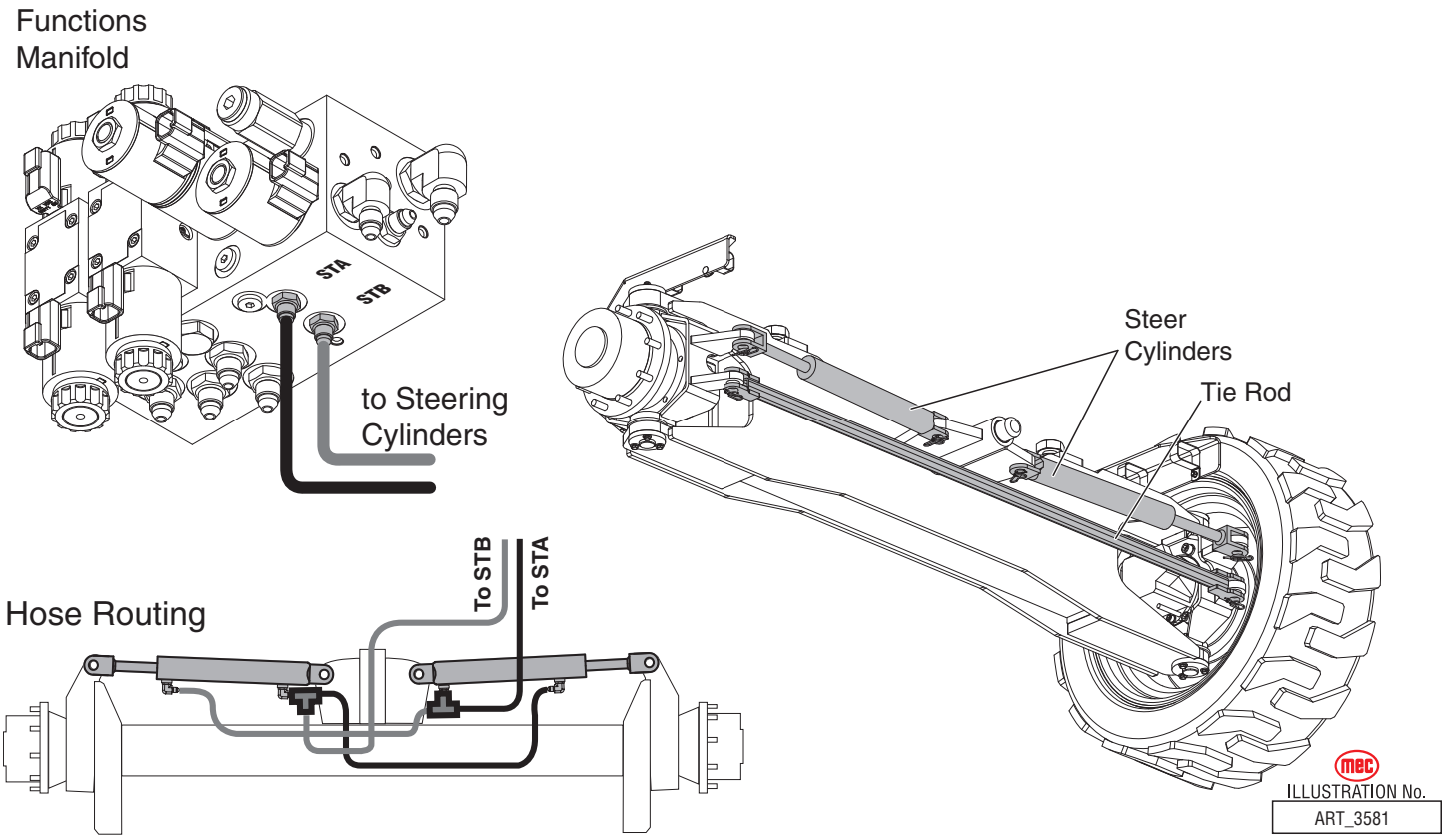

Outrigger System

Note: Refer to Section 12 - Mechanical Components for Remove and Replace instructions.
Refer to Section 19 - Hydraulics for parts list and hose routing.

There are four (4) Outrigger Cylinders, each located at one of the corners of the machine. These cylinders allow the machine to adjust front-to-rear and side-to-side in order to provide a level work platform.

Automatic leveling is controlled by the GP400 processor.

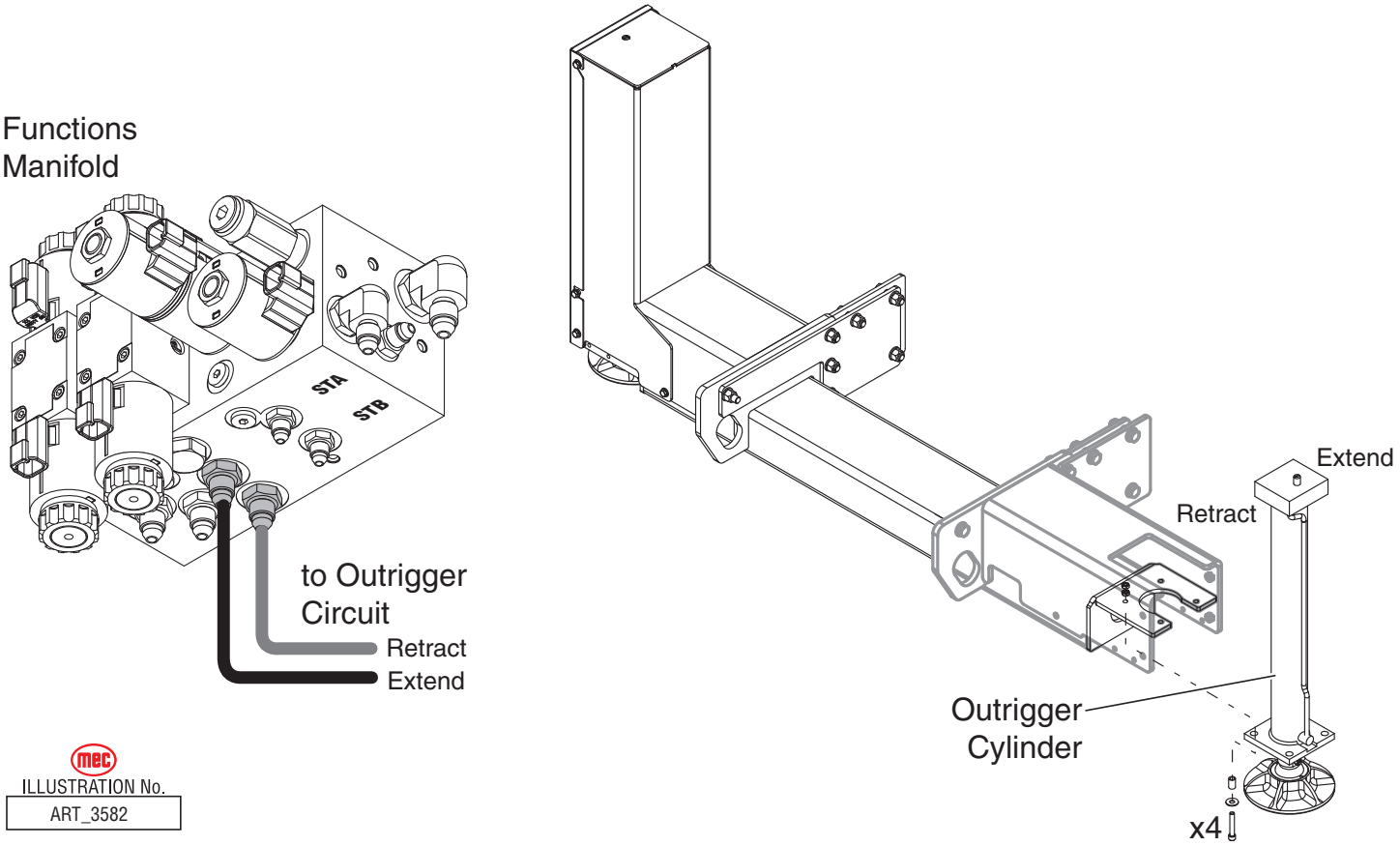

Platform Lift Function

Note: Refer to Section 12 - Mechanical Components for Remove and Replace instructions.
Refer to Section 19 - Hydraulics for parts list and hose routing.

Lift Circuit

The lift system uses the hydraulic pump to obtain proportional Lift/Lower function controlled by the lift valve and proportional valve.

Lift Cylinders

Note: Refer to Cylinder Repair.

5492RT -- Two (2) double-acting hydraulic cylinders lift the platform.
6092RT -- Two (2) single-acting hydraulic cylinders lift the platform.
3392RT-T -- One (1) double-acting hydraulic cylinder lifts the platform.

The cylinders are operated by a 3-position, 2-way proportional solenoid-operated valve. The cylinders are also operable by the auxiliary hydraulic power unit for emergency lowering.

A counterbalance valve (5492RT, 3392RT-T) or solenoid valve (6092RT) prevents retraction of the cylinder rod should a hydraulic line rupture or a leak develop between the cylinder and its related control valve.

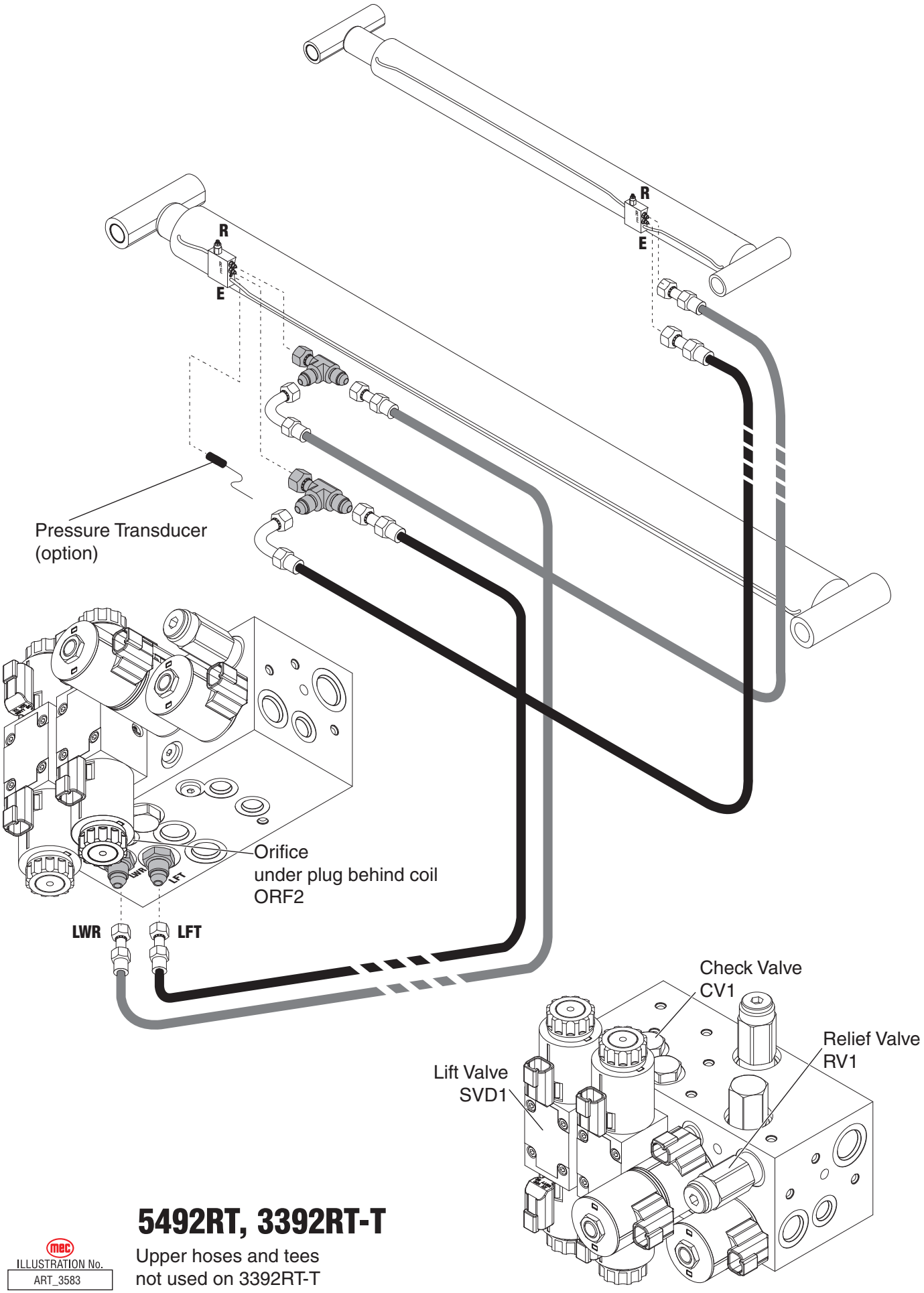

5492RT, 3392RT-T

Upper hoses and tees
not used on 3392RT-T

ILLUSTRATION No.
ART_3583

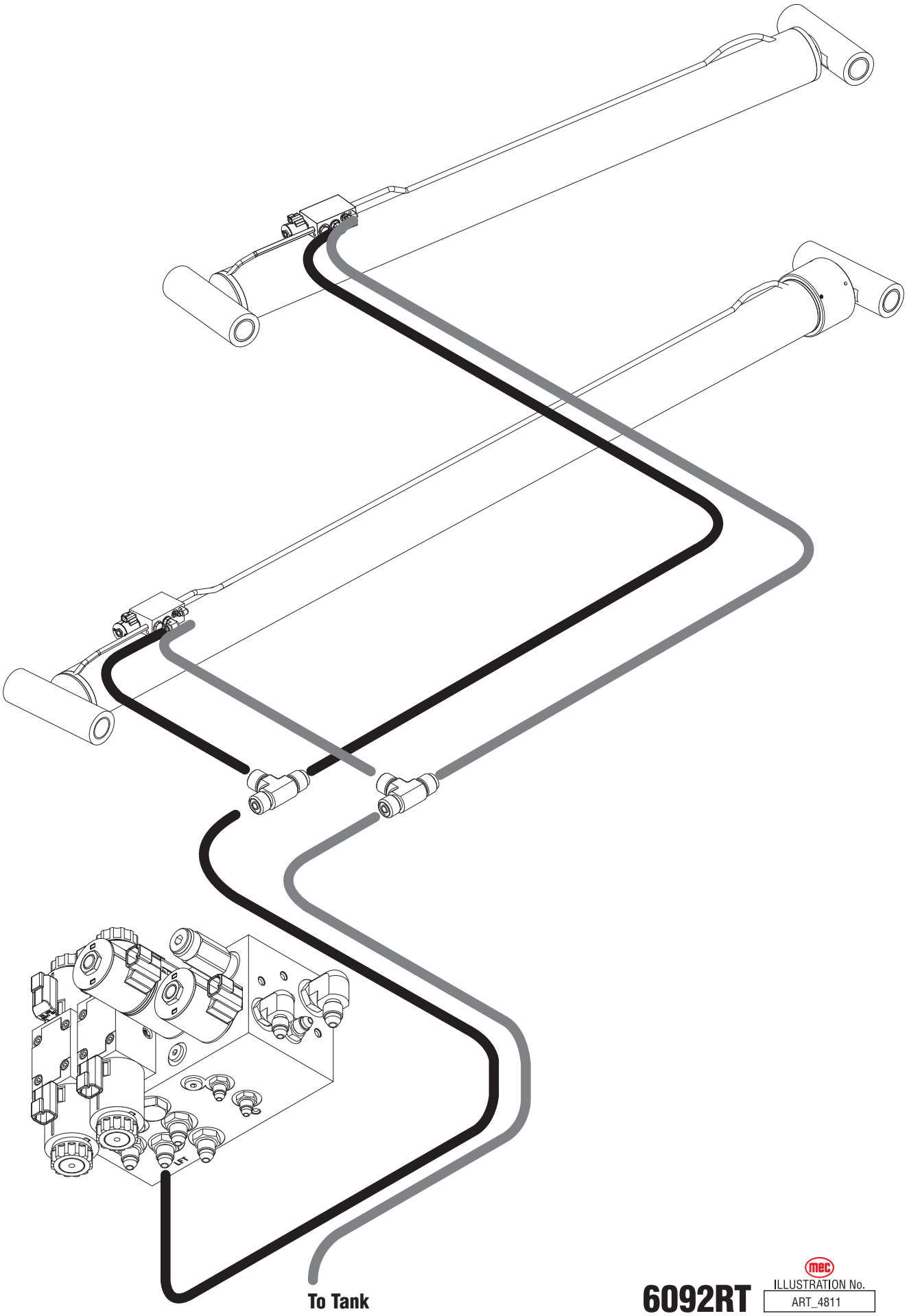
To Tank
6092RT
ILLUSTRATION No.
ART_4811

General Cylinder Repair

WARNING **CYLINDERS ARE HEAVY. SUPPORT CYLINDERS BEFORE REMOVING HARDWARE THAT SECURES THE CYLINDER TO THE MACHINE.**

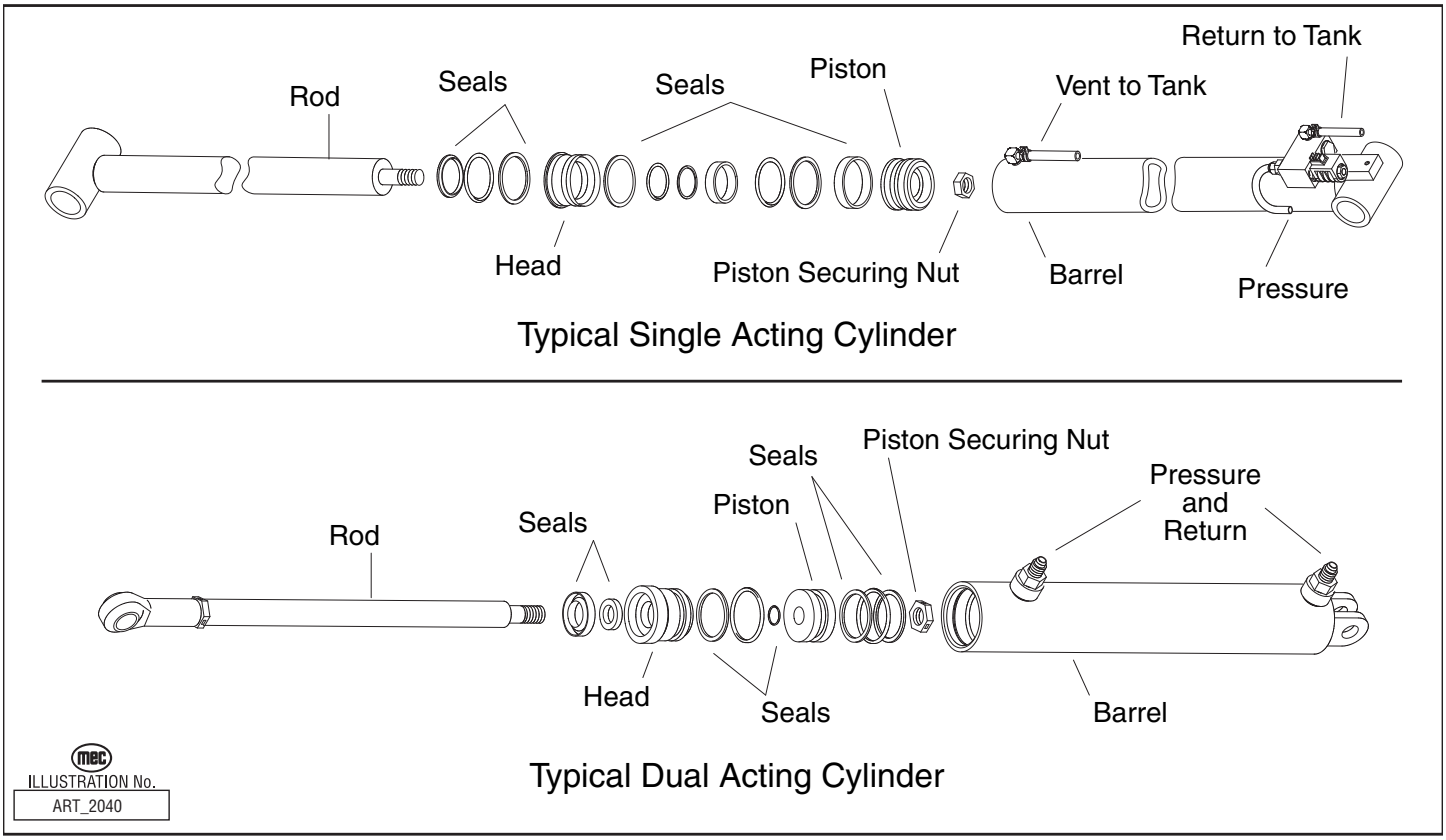

Removal

Note: Refer to Section 12 - Mechanical Components for Remove and Replace instructions, and the Parts Manual for a list of hardware specific to the cylinder being repaired.

1. Tag hoses for proper reassembly.
2. Disconnect hoses and IMMEDIATELY cap the openings to prevent contamination.
3. Remove cylinder from the machine as described in Section 12 - Mechanical Components.

Preparation

CAUTION **Take precautions to protect the rod surface. Guard against dirt or other foreign objects entering system.**

1. Drain all fluid from cylinder.
2. Clean all dirt and grit from outside of cylinder.
3. Insert cylinder into vise.

Cylinder Disassembly

1. Remove the head from the cylinder body.
2. Remove the shaft assembly from the barrel, pulling in a straight line, so as not to scar the internal parts.
3. Insert shaft into a soft jawed vise so that the head and piston can be removed. Be sure the shaft and vise are both clean before using.
4. Remove nut at the end of the shaft and pull head and piston off of the rod.
5. Remove all seals from the head and piston using a non-sharp seal tool. These tools are available from various seal suppliers.
6. Clean all fluid and debris off of the head, piston, shaft, collar and barrel using solvent, rags, and an air hose.
7. Inspect parts for scratches, pits or polishing. Check seal groves and sealing surfaces.
   a. Scratches or pits deep enough to catch the fingernail are unacceptable; replace the cylinder.
   b. Polishing is a sign of uneven loading. Check for roundness. If a polished surface is not round within .007 in. (0.18 mm) replace the cylinder.

Cylinder Assembly

Caution:

- To ensure a quality repair, cylinder parts must be thoroughly cleaned, dry, and free of solvents, and assembly must be performed in a clean area free of dust and contamination.
- Do not use sharp edged tools during seal replacement. After installing seals wait at least one hour before assembling the cylinder to allow the seals to return to their original shape.
- Torque all hardware according to the Hydraulic Components Torque Table unless otherwise specified.

1. Lubricate all components with clean hydraulic fluid.
2. Install new seal kit components. Install all seals on the head and piston using the non-sharp seal tool.
3. Place a small amount of fluid on the inside head seals. Reinstall the head on the shaft by slipping head over the piston end of the shaft. Be very careful not to damage the inside seals.
4. Place a small amount of fluid on the inside seals of the piston. Reinstall the piston on the shaft by slowly twisting the piston onto the threads of the shaft. Be very careful not to damage the inside seals.
5. Reinstall the shaft nut. Torque 1 ½" nut to 160 ft. lbs. (216 Nm).
6. Grease the outside seals of the head and piston.
7. Reinstall the shaft into the barrel of the cylinder and push in until groove of the head lines up with the slot in the barrel.
8. Reinstall the cylinder retainer. Installation is reverse of removal.
9. Cycle the cylinder using air to check for proper operation.

Note: Keep all parts clean when working with hydraulic cylinders. Even one small piece of dirt or grit can damage the cylinder.

Generator Option

Note: Refer to Section 14 - Schematics
Refer to Section 20 - Base

The optional generator is driven by hydraulic pressure that takes off from the pressure line going into the Functions Manifold. It is turned on and off by means of a solenoid valve that is actuated by a switch located at the Platform Controls station. A short extension cord connects the generator to the Power To Platform plug located in the Controls Module.

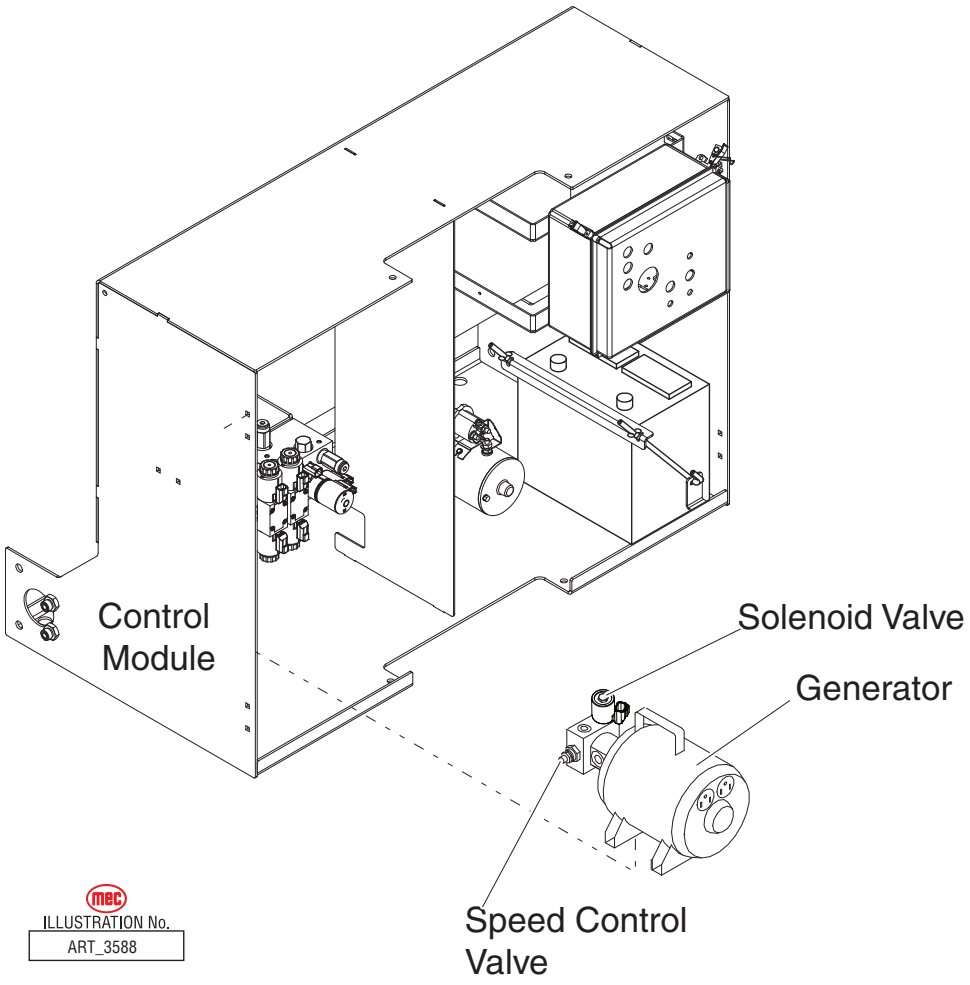

Electrical System – General

The electrical control system consists of lower controls located on the machine base and upper controls located on the machine platform. Emergency lowering controls are also located on the machine base.

Lower Controls

The lower controls will operate all functions except the steer, drive and outrigger functions.

Upper Controls

The upper controls will operate all functions including drive, steer, lift, and lower. A momentary bi-directional rocker switch on the joystick provides the steering function. The control system for operation of drive, steer, lift, and lower is electric-over-hydraulic type. The drive system is a proportional system controlled by position and direction of the upper controls joystick.

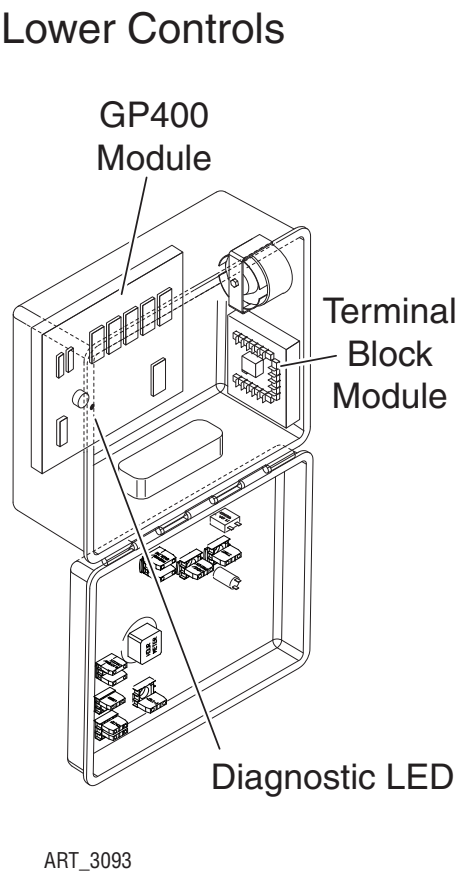

ART_3093

Emergency Stop

There are two red Emergency Stop switches: One located on the upper controls and one on the lower controls. Activation of either Emergency Stop switch will immediately cut electrical power to all controls, thereby stopping all machine functions. Press the switch to stop all electrical power and turn the switch clockwise to reset.

When both Emergency Stop switches are “set”, the controls have electrical power and the machine will operate.

Note: Both switches must be set or the machine will not operate. The electric Emergency Lowering switch will continue to function when the Emergency Stop switches are depressed.



ART_2506 R2

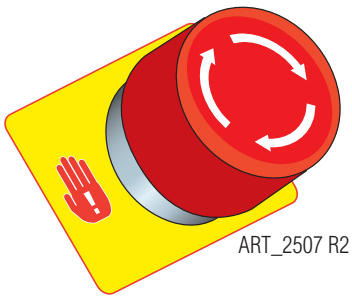

ART_2507 R2

Emergency Lowering

The machine utilizes a toggle switch to operate an emergency hydraulic pump that provides power to lower the platform.

Diagnostic LED

If the machine fails to operate, inspect the GP400 Module located inside the control box. The LED located on the processor should be ON. If the LED is OFF or FLASHING, refer to Section 13 - Troubleshooting.

START DELAY Light

The START DELAY light is located on the Lower Control box (see page 50, item #7).

The machine is equipped with a start system protective device, controlled by the GP400. This protects the starter and related parts from damage caused by overcranking in hard starting situations.

- Maximum starter operation time is 10 seconds.
- If no start, the START DELAY light will illuminate and the starter will be disabled for 35 seconds.
- When the START DELAY light goes OFF the starter will operate.

Battery Disconnect Switch

All electrical power is routed through the Master Disconnect switch located in the Control Module. The switch can be locked in the OFF position with a padlock to prevent unauthorized use.

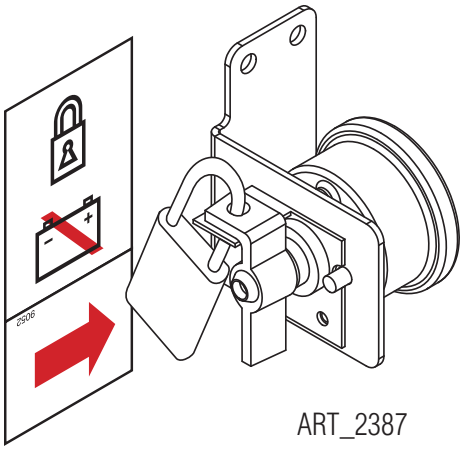

ART_2387

Batteries

CAUTION

Discharged batteries can freeze, causing damage to the battery and/or battery case. A broken battery case will allow electrolyte to leak out.

WARNING

CHARGING BATTERIES CREATE EXPLOSIVE HYDROGEN GAS. KEEP SPARKS, FLAMES AND SMOKING MATERIALS AWAY FROM BATTERIES.

ALWAYS WEAR SAFETY GLASSES WHEN WORKING WITH BATTERIES.

BATTERY FLUID IS CORROSIVE. THOROUGHLY RINSE SPILLED FLUID WITH CLEAN WATER.

REPLACE ONLY WITH MANUFACTURER-APPROVED BATTERIES.

BEFORE DISCONNECTING THE BATTERY NEGATIVE (–) LEAD, MAKE SURE THAT ALL SWITCHES ARE OFF. IF ON, A SPARK WILL OCCUR AT THE GROUND TERMINAL THAT COULD IGNITE HYDROGEN GAS OR FUEL VAPORS.

One (1) battery (12 Volts DC) -- supplies the electrical power required to start the engine, operate the electrical circuits, and provides power for the Emergency Down auxiliary power unit.

Battery Maintenance (In Storage)

Follow these procedures for maintenance of battery on a machine not in use:

- Keep battery clean. Electrolyte of batteries should be checked regularly and kept at proper level.
- Never stack one battery directly on top of another because post or container damage can result. If batteries are stored individually, place supporting boards between layers. Rotate stock so that the oldest batteries are used first.
- Batteries should be kept fully charged. A battery, while in storage, should be recharged to full charge at recommended intervals.

A BATTERY FULLY (100%) CHARGED AT 80°F (26.6°C)

- Drops to 65% at 32°F (0°C)
- Drops to 40% at 0°F (-32°C)

Recommended Battery Charge Intervals

If Stored At	Recharge
Below 40°F (4°C)	Every week
40°-60°F (4°-15°C)	Every 2 weeks
Above 60°F (15°C)	Every month

Battery Maintenance (In Use)

Check battery and surrounding area for signs of damage or corrosion.

Check battery terminals for:

- **Corrosion:** Regularly clean connections and apply a nonmetallic grease or protective spray to retard corrosion.
- **Loose connections:** Be sure all cable connections are tightly secured, and that good contact is made with terminals.
- **Broken or frayed cables:** Be sure all connections are good and that no loose or broken wires are exposed. Replace as necessary.

Check battery electrolyte level. Replenish the electrolyte, if necessary. Remove vent caps before filling, and USE ONLY DISTILLED WATER. DO NOT OVERFILL. Fill to level indicator (or ½ inch over the top of separators, if there is no level indicator). Fill after charging to prevent overflow of acid due to expansion. Do not use a hose to add water to batteries.

Allowing the electrolyte level to drop below the top of the separators will lead to shortened battery life.

Excessive water usage can indicate that a battery has been overcharged, has been subjected to excessively high temperatures, or is nearing the end of its service life.

Battery Preventative Maintenance:

During quarterly maintenance (after battery has been charged), check the specific gravity of two or more cells. A fully charged battery should indicate 1.28 specific gravity.

If low readings are noted, check the following:

- Check terminals for corrosion, loose connections and broken or frayed cables.
- Check all cells with a hydrometer for variance in specific gravity. A variation of 0.03 points or more between cells is a cause for concern. Mark the low cells.

Recheck specific gravity of all cells after recharging. Wash the top of the battery, making sure all vents are in place. Do not allow cleaning water or other foreign matter to enter the cells. Use a solution of bicarbonate soda (5 tsp. of baking soda per quart of warm water) and water to wash the battery if there is an accumulation of acid.

Battery Specific Gravity and Voltage

Specific Gravity		Volts DC		
	Each Cell	Per Cell	6V Battery	12V Battery
Fully Charged	1.280	2.10	6.30	12.60
Fully Discharged	1.130	1.75	5.19	10.50

Battery Replacement

WARNING **TURN OFF THE BATTERY DISCONNECT SWITCH BEFORE REMOVING ANY BATTERY FROM THE MACHINE.**

CAUTION

Prevent damage to the battery and/or electrical system;

- **Always disconnect the negative battery cable first.**
- **Always connect the positive battery cable first.**

To Remove A Battery:

1. Turn the Battery Disconnect switch to OFF.
2. Disconnect the battery cables and remove battery hold-down hardware.
3. Lift the battery from the compartment, put the battery aside and dispose of properly.

To Install A Battery:

1. Position the battery in the compartment and secure with hold-down hardware.
2. Connect battery cables.

Lower Controls

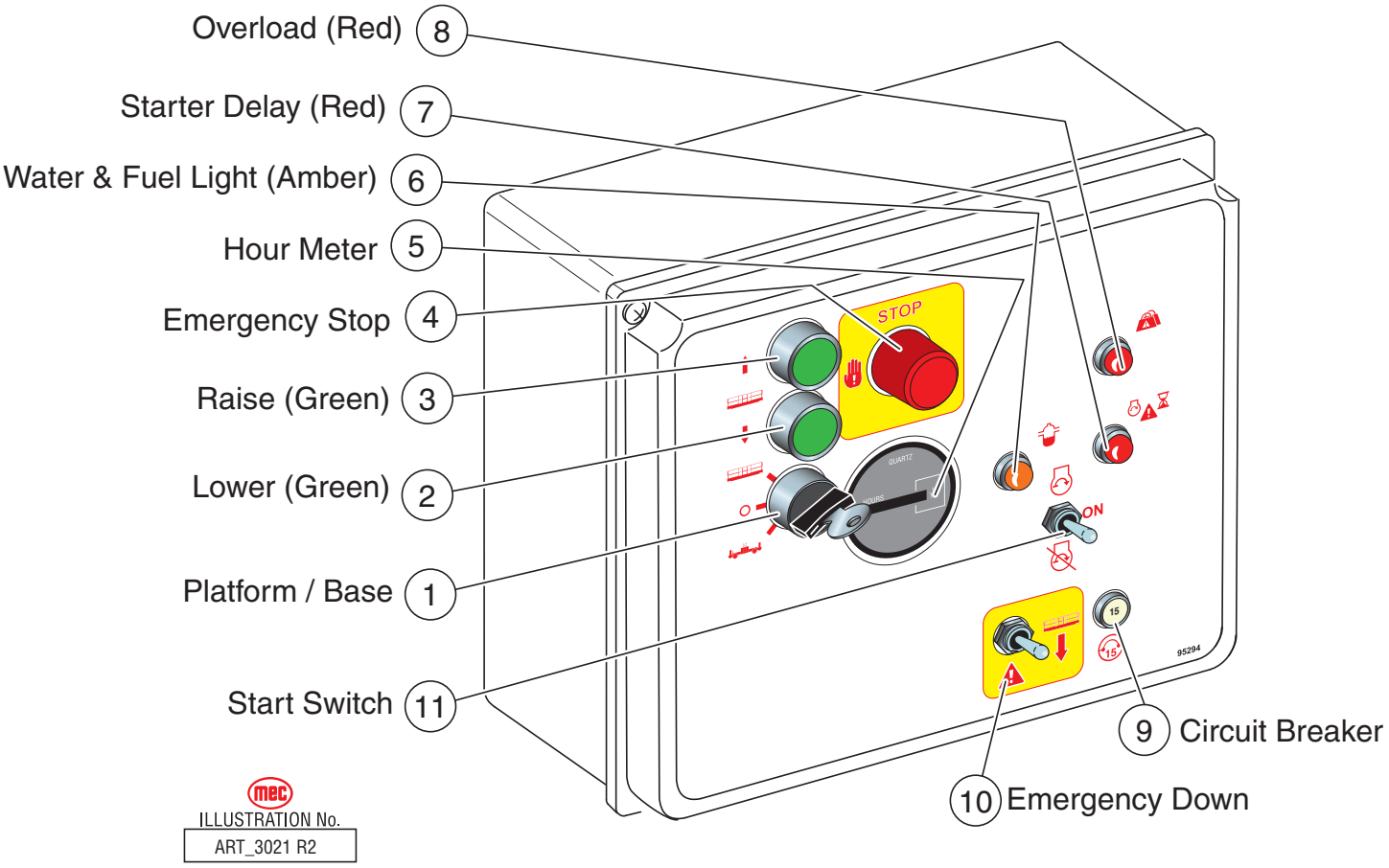

CONTROL		DESCRIPTION	
1	Selector Switch	PLATFORM	Select to operate from the platform control panel.
		BASE	Select to operate from the base control panel.
		OFF	Select to stop operation from either control panel.
2	LOWER Button	Press and hold to lower the platform. Release to stop lowering.	
3	RAISE Button	Press and hold to elevate the platform. Release to stop elevation.	
4	Emergency Stop Switch	Press to stop all machine functions. Turn clockwise to reset.	
5	Hour Meter	Indicates total elapsed time of machine operation.	
6	Water & Fuel Light	Indicates if water has contaminated fuel.	
7	Start Delay Indicator Light	After 20 seconds of continuous cranking, the engine starter circuit cuts off momentarily to prevent damage to the starter. This light illuminates when the starter circuit is cut off. Resets after 25 seconds.	
8	Overload	Platform overloaded when light is ON. An audible alarm will sound and all machine functions will stop. Remove weight from the platform to restore function and continue.	
9	Circuit Breaker	Trips when there is excessive electrical load. Push to reset.	
10	Emergency Down Switch	Activate this switch to run the Emergency Down auxiliary hydraulic pump.	
11	Start / Run Switch	Turn power ON or OFF at the platform. Does not affect upper controls.	

Upper Controls

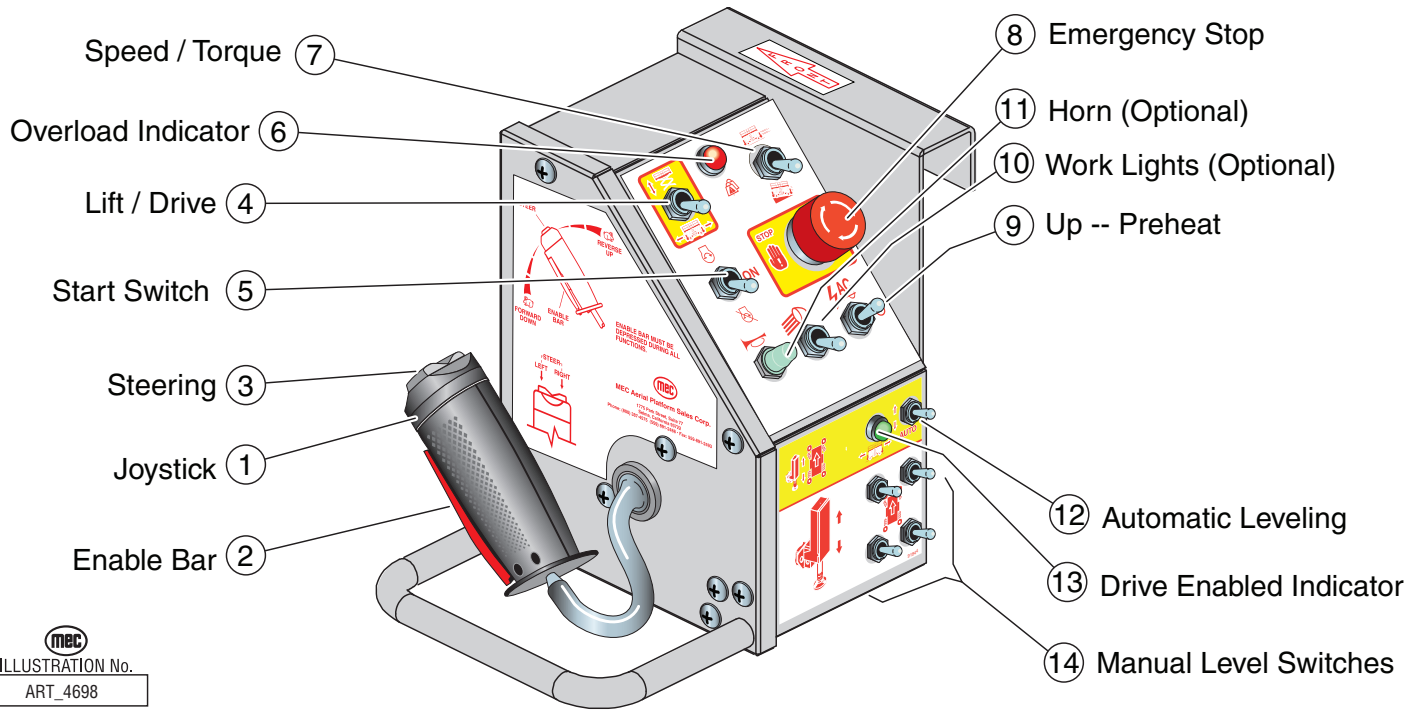

CONTROL		DESCRIPTION	
1	Joystick	DRIVE	Controls Forward and Reverse travel at stepped speeds.
		LIFT	Move toward operator to elevate platform. Lift speed increases proportional to the Joystick movement Move away from operator to lower platform. Speed is fixed.
2	Enable Bar	Squeeze to enable DRIVE, STEER, and LIFT from Joystick.	
3	Steering Switch	Using thumb, press and hold the rocker switch to steer Left or Right.	
4	Mode Selector	Select LIFT or DRIVE function for Joystick.	
5	Start / Run Switch	Turn power ON or OFF at the platform. Does not affect lower controls.	
6	Overload Indicator	Platform overloaded when light is ON. An audible alarm will sound and all machine functions will stop. Remove weight from the platform to restore function and continue.	
7	Speed / Torque Switch	HIGH TORQUE	Slow speed. Provides maximum torque for rough terrain.
		HIGH SPEED	Provides high speed when platform height is below 10 feet (3 m).
8	Emergency Stop Switch	PUSH to stop all machine functions. TURN CLOCKWISE to reset.	
9	Up -- Generator	Push the switch UP to engage optional AC generator. Drive and Lift functions are disabled while the generator is on.	
10	Work Lights (Option)	Move switch Up to turn on work lights.	
11	Horn	Press to sound warning horn.	
12	Automatic Level Switch	Move switch Up and hold until automatic leveling is complete.	
13	Drive Enable Indicator	Drive function is enabled when the light is ON.	
14	Manual Level Switches	Push these switches UP or DOWN to adjust individual outriggers.	

Alarms and Switches

Movement Alarm

The Movement Alarm is activated as soon as the DOWN operation is activated from either control station. This is the default setting. If desired, the movement alarm setting can be modified to activate the alarm during other functions (refer to Section 13 - Troubleshooting).

WARNING

THE MOVEMENT ALARM IS PROVIDED FOR YOUR PROTECTION, AND PROTECTION OF PERSONS WORKING IN THE IMMEDIATE AREA.

DISABLING THIS IMPORTANT SAFETY DEVICE MAY RESULT IN SERIOUS INJURY OR DEATH.

EZFit Angle Sensor

The Angle Sensor provides platform elevation information to the GP400 control module.

When the GP400 reads a certain output from the angle sensor it will:

- Disable tilt operation.
- Enable tilt sensor cutout operation.
- Reduce drive speed

On machines equipped with the platform overload option, the Angle Sensor works in conjunction with the Pressure Transducer to monitor the load in the platform and a second redundant Angle Sensor located beside the first.

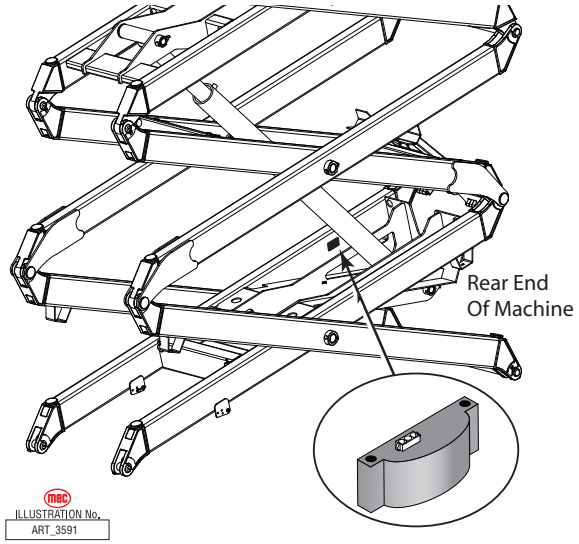

DANGER

NEVER PERFORM SERVICE ON THE MACHINE WITH THE PLATFORM ELEVATED WITHOUT FIRST BLOCKING THE SCISSOR ASSEMBLY USING THE MAINTENANCE LOCK.

Pressure Transducer (Option)

The Pressure Transducer provides lift cylinder pressure information to the GP400. It works in conjunction with the Angle Sensor. Excessive pressure indicates platform overload. When the GP400 detects overload, it will:

- Disable lift, lower and drive operation.
- Sound audible alarms.
- Turn ON the OVERLOAD light on the upper control panel.

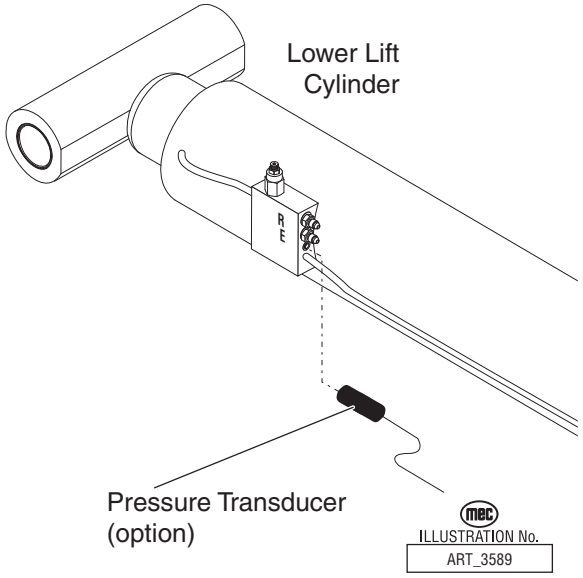

CAN Tilt Angle Transducer

The CAN Tilt Angle Transducer provides axle level information to GP400.

- **Axle Level** located on the rear axle near the axle lock cylinder mount behind the Controls Module. Provides axle position information to the GP400 through the CAN-bus system.

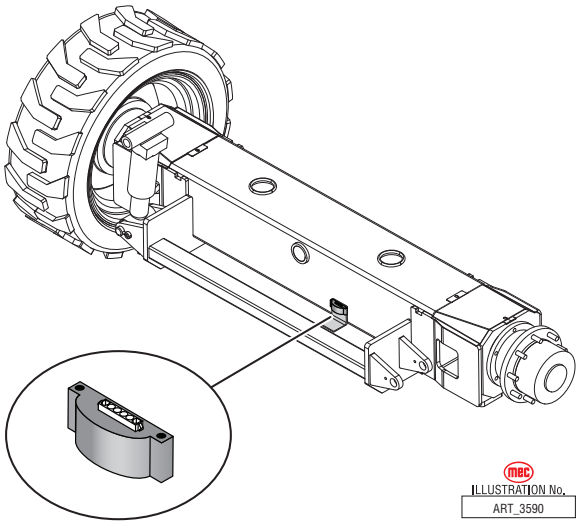

Relays

Relays are located beside the engine on the engine tray. These relays reduce the current flow through the GP400 Control Module. Refer to the Section 14 - Schematics for relay functions and interconnect.

Start Relay

Provides power to the starter solenoid.

Throttle Relay

Provides power to the electric throttle solenoid.

Preheat Relay

Provides power to the diesel engine glow plugs.

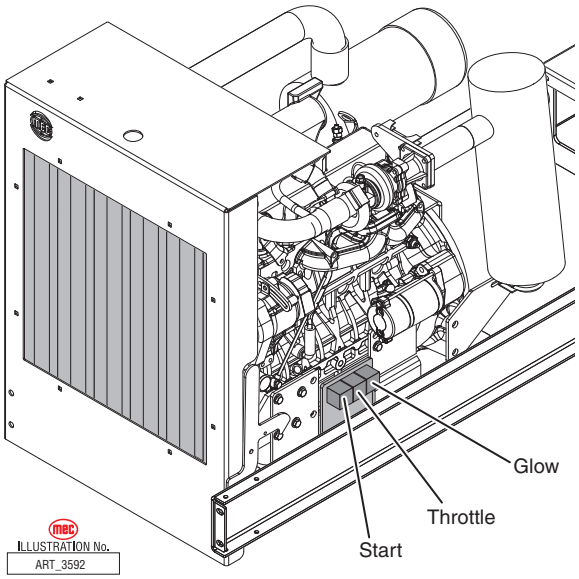

Deutsch Connectors

Deutsch connectors used on MEC equipment are designed so that individual parts may be replaced without replacing the entire component. Special tools and detailed instructions are provided in Deutsch Connector field kits, MEC part no. 84091.

Male Plug Connector

- Use the flat end of the Removal Tool or a flat blade screwdriver to pry the locking wedge from the connector, taking care not to damage the Sealing Gasket.
- Inspect and replace damaged parts.
- Replace or re-crimp wires and contacts.

Female Receptacle Connector

- Use the notched end of the removal tool or a wire hook to pull the locking wedge from the connector
- Replace worn or damaged parts
- Replace or re-crimp wires and contacts.

Locking Fingers

- Remove the locking wedge as outlined above.
- Using the removal tool or a flat blade screwdriver, push the Locking Fingers aside to release the contact.
- Pull the wire and contact out of the connector.

Heavy Duty Plug

- Slide the removal tool along the wire to be replaced and push into the connector to release the contact.
- Pull the wire and contact out of the plug.

Crimping

- Strip 1/4 in. (6 mm) insulation from the wire.
- Insert the contact into the crimping tool and insert the stripped wire into the contact making sure no wires are outside the contact barrel.
- Close the handles of the crimping tool, then release the handles to remove the crimped contact.

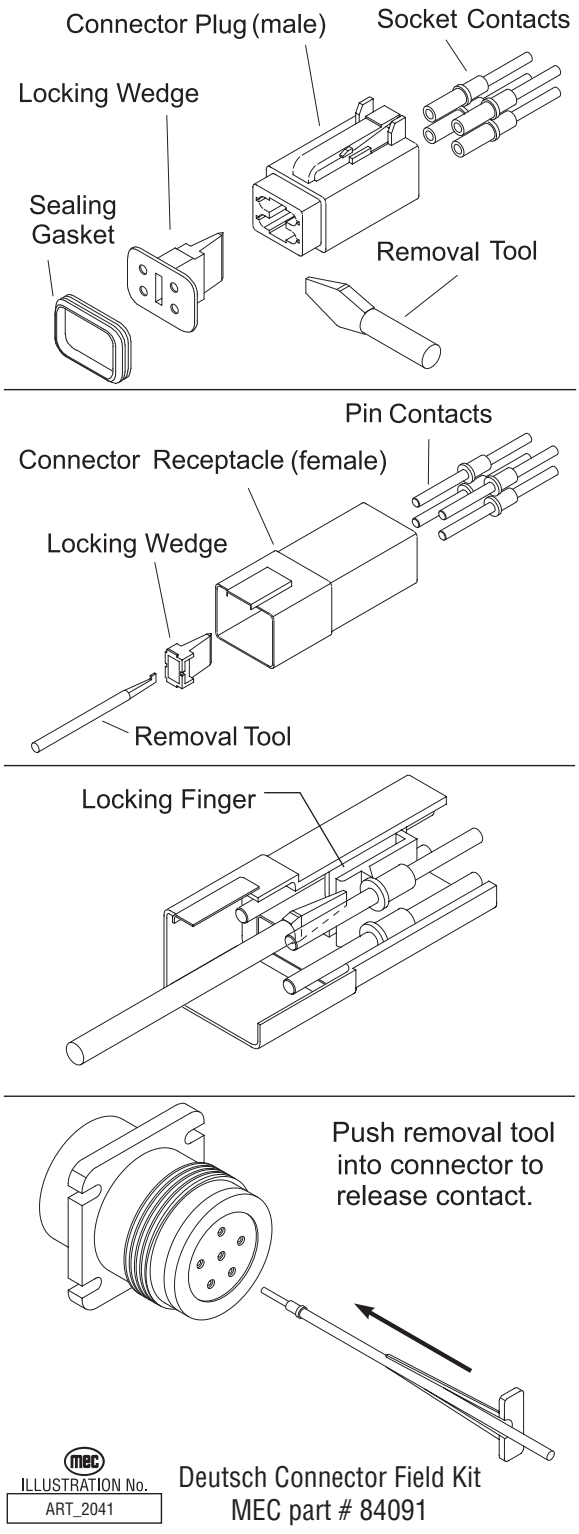

Continuity Checks

Selector Switch – On-Off

- Disconnect wires.
- Connect first probe of ohm meter to common terminal.
- Connect second probe to any normally open terminal.
- With switch OFF (open) there should be no reading.
- With the switch ON (closed) there should be a low resistance reading.
- Repeat for each normally open terminal.

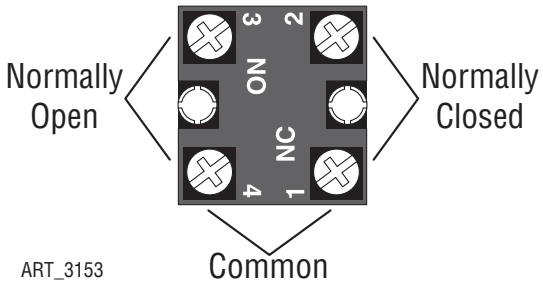

Toggle Switch – On-Off

- Disconnect wires.
- Connect first probe of ohm meter to common terminal.
- Connect second probe to normally open terminal.
- With the switch turned OFF there should be no reading.
- With the switch turned ON there should be a low resistance.

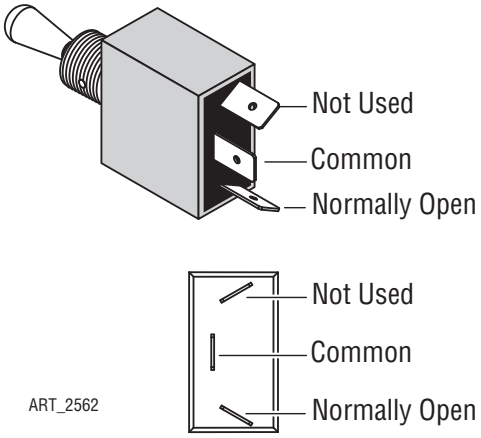

Toggle Switch – 1-Pole 2-Position

- Disconnect wires.
- Connect first probe of ohm meter to common terminal.
- Connect second probe to top normally open terminal.
- With toggle DOWN there should be no reading.
- With the toggle UP there should be a low resistance.
- Move second probe to bottom normally open terminal.
- With toggle UP there should be no reading.
- With the toggle DOWN there should be a low resistance.

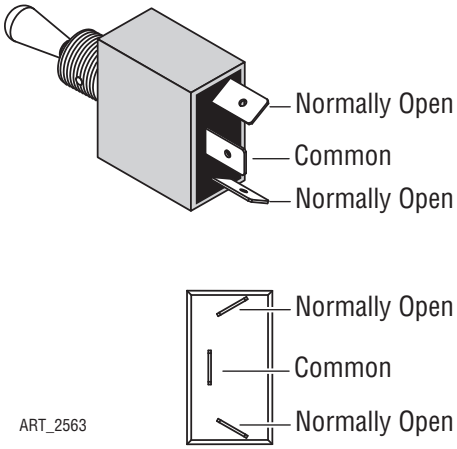

Toggle Switch – 1-Pole 3-Position

- Disconnect wires.
- Connect first probe of ohm meter to common terminal.
- Connect second probe of ohm meter to top terminal.
- With the toggle UP or MIDDLE there should be a low resistance.
- Move second probe to bottom terminal.
- With the toggle DOWN or MIDDLE there should be a low resistance.
- Connect first probe of ohm meter to top terminal.
- Connect second probe of ohm meter to bottom terminal.
- With toggle in ANY POSITION there should be no reading.

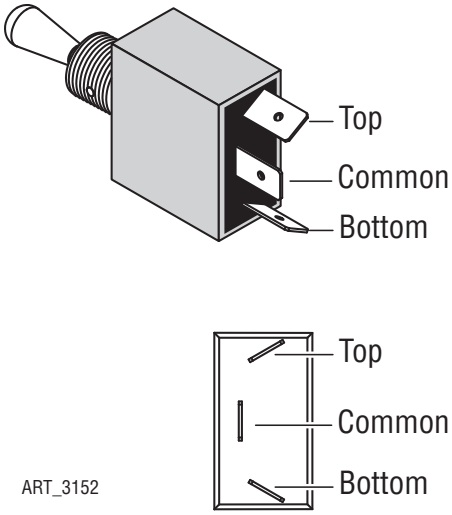

Toggle Momentary Switch

- Disconnect wires.
- Connect first probe of ohm meter to common terminal.

Test Top Position

- Connect second probe to top normally open terminal.
- With the toggle in the neutral (open) position there should be no reading.
- With the toggle UP (closed) there should be a low resistance.
- With the toggle DOWN (closed) there should be no reading.

Test Bottom Position

- Move second probe to bottom normally open terminal.
- With the toggle in the neutral (open) position there should be no reading.
- With the toggle DOWN (closed) there should be a low resistance.
- With the toggle UP (closed) there should be no reading.
- Repeat for both rows of two-row switch.

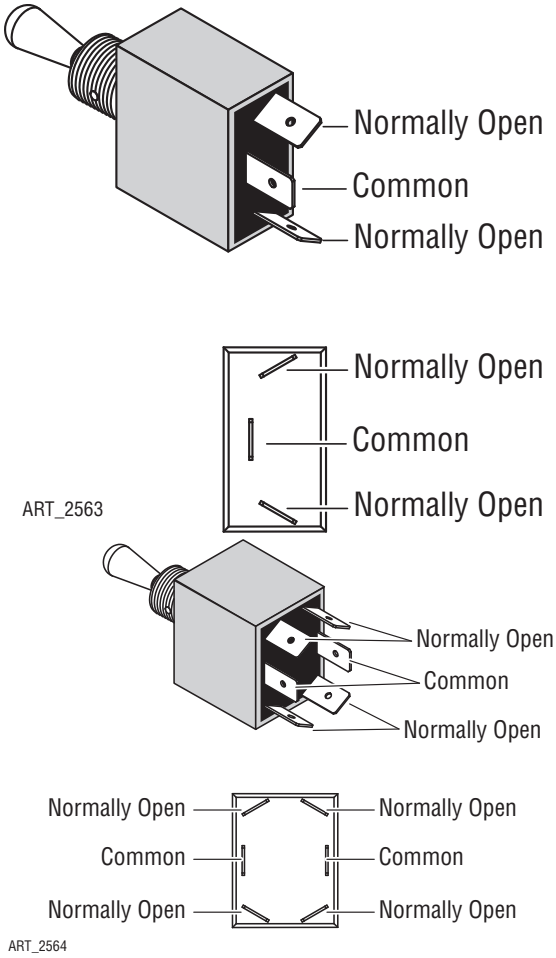

Momentary Button Switch

- Disconnect wires.
- Connect one probe of ohm meter each terminal.
- With the button in the neutral (open) position there should be no reading.
- With the button pushed (closed) there should be a low resistance

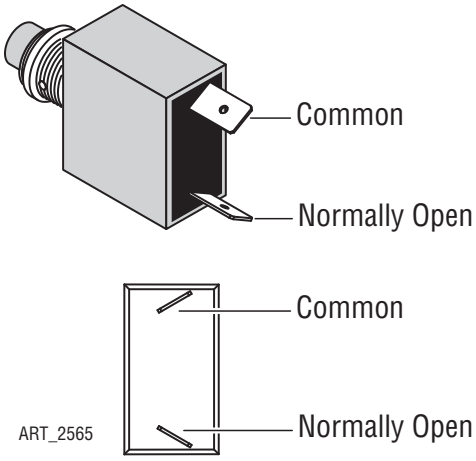

Emergency Stop Button

- Disconnect wires.
- Connect one probe of ohm meter each terminal.
- With the button PRESSED there should be no reading.
- With the button RESET there should be a low resistance.

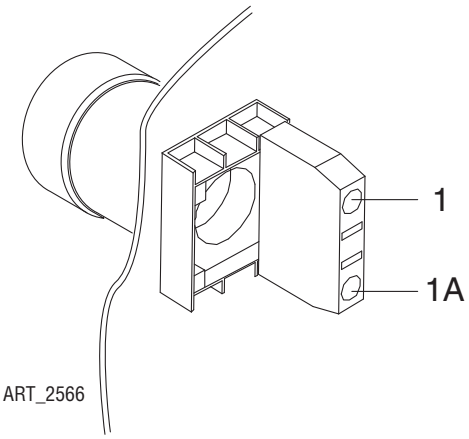

Relay

- With the #85 terminal grounded, apply voltage to #86 terminal connection.
- Confirm normally closed (#87A) contacts are opening. Continuity with #30 will be broken.
- Confirm normally open (#87) contacts are closing. Continuity with #30 will be made.

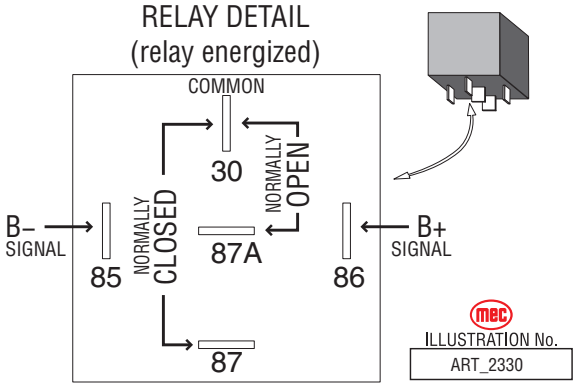

GP400 Control Module Setup

Location

- The GP400 Control Module processor is located in the lower control box.
- The GP400 Matrix Module is located in the upper control box.

Diagnostic information can be found in Section 13 - Troubleshooting. Wiring information can be found in Section 14 - Schematics.

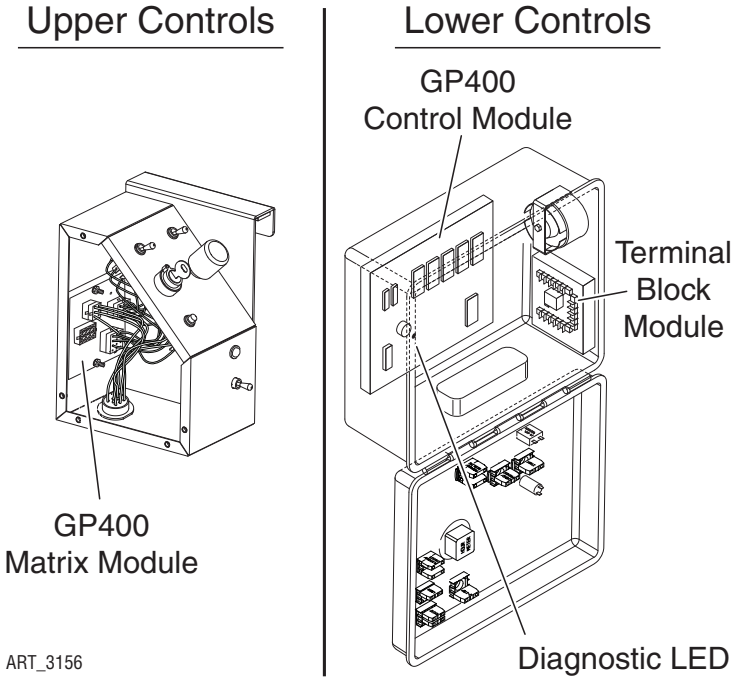

General Description

The GP400 control module uses a variety of sensors to maintain proper and safe operation of the machine. This machine may be sold into many different countries that require a variety of monitoring equipment. For example, the CE equipped machine, designed for European (and many other) countries, is equipped with a Load Sensing system that uses a Pressure Transducer to monitor oil pressure in the lift circuit and an Angle Transducer to monitor platform elevation. ANSI models use an Angle Transducer, and only monitor platform elevation.

In the event the GP400 requires replacement, a calibration process must be performed before the machine can be operated.

WARNING

ONLY TRAINED AND AUTHORIZED PERSONNEL SHALL BE PERMITTED TO CALIBRATE THE PLATFORM OVERLOAD SENSING SYSTEM. READ ALL INSTRUCTIONS CLOSELY BEFORE ATTEMPTING EACH STEP OF THE CALIBRATION PROCEDURE.

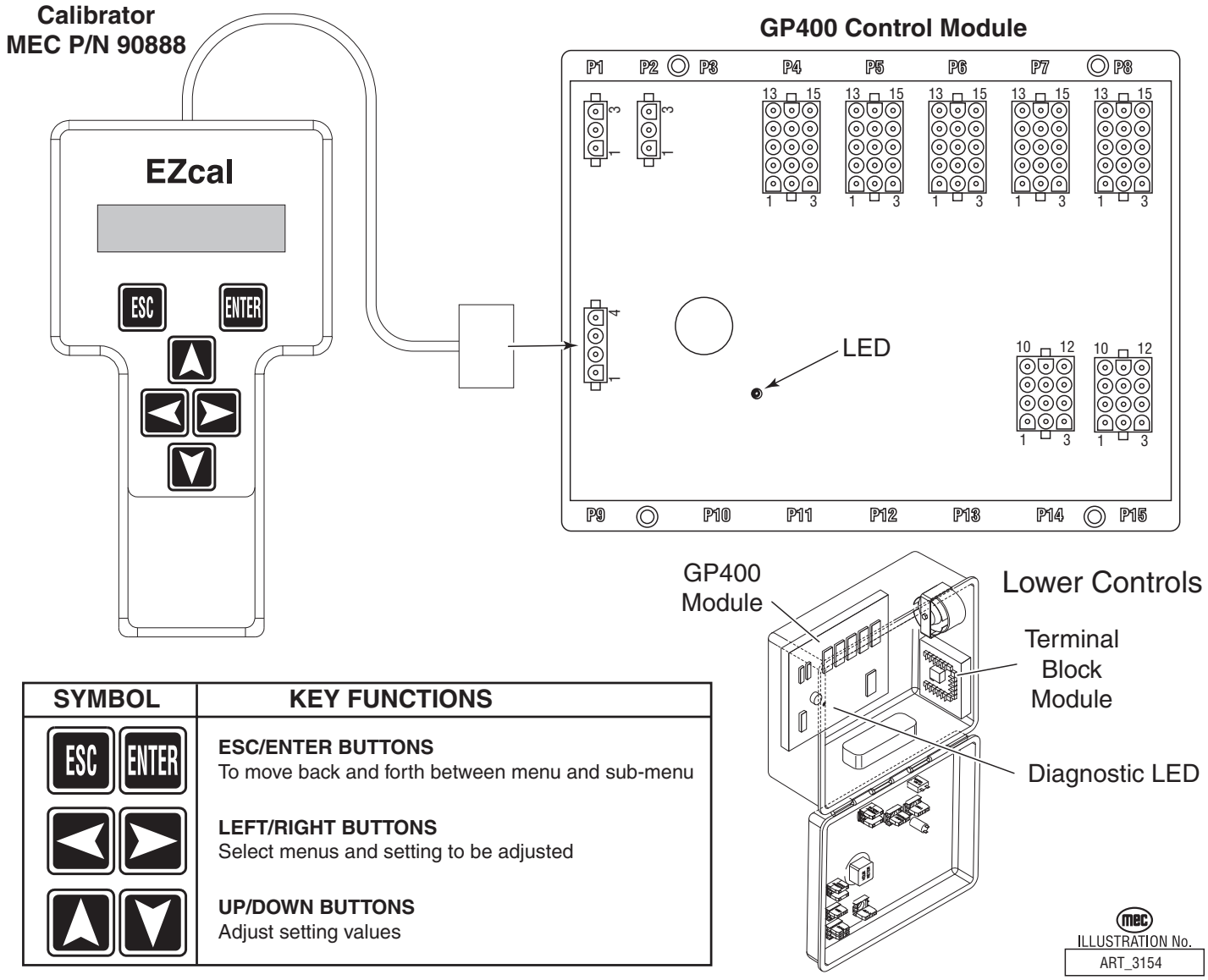

SYMBOL	KEY FUNCTIONS
ESC ENTER	**ESC/ENTER BUTTONS** To move back and forth between menu and sub-menu
◀ ▶	**LEFT/RIGHT BUTTONS** Select menus and setting to be adjusted
▲ ▼	**UP/DOWN BUTTONS** Adjust setting values

GP400 Calibration

The EZ-Cal hand-held device (MEC part # 90888)or an on-board diagnostic display is required to access the GP400 for troubleshooting and calibration.

The GP400 processor relies on angle and pressure sensors to monitor platform elevation at all times. These sensors send varied voltages to the GP400 that relate directly to their respective position. The calibration process is the means by which the GP400 equates these voltages to actual platform elevation.

For example, the Angle Transducer, used to monitor platform elevation, varies its output between 1 and 4 volts through 140 degrees of rotation. During calibration the GP400 may learn that 1.8 volts (fictional number used for explanation) represents the fully stowed position and 3.6 volts represents the fully elevated position and therefore voltages between those figures relate to various heights in between.

All machines are calibrated at the factory and should not require calibration unless the GP400 is replaced or displays a code that alerts to the need to recalibrate.

Tilt Sensor Calibration is required on all machines regardless of installed options and must be performed first.

Height Calibration follows Tilt Sensor Calibration for machines not equipped with the optional Platform Load Sensing System and consists of only height calibration. Skip this procedure if your machine is equipped with the optional Platform Load Sensing System.

Separate calibration is required of all machines outfitted with the optional Platform Load Sensing System. All steps in the Platform Load Sensing System calibration must be performed in the proper sequence before the GP400 will recognize complete and proper calibration. Begin with the Tilt Sensor Calibration, then proceed to the Platform Load Sensing System Calibrations section.

If the calibration procedure is performed incorrectly or if there is a failure in one of the monitored circuits during the calibration, the GP400 will not allow the operator to continue with the calibration process. An error message will display on the EZ-Cal indicating the reason for the interruption.

Additional details of these error messages can be found at the end of the calibration instructions.

This and other procedures can only be performed using an EZ-Cal scan tool. If you do not have an EZ-Cal, please contact MEC to obtain one.

Tilt Sensor Calibration

Correctly performing the following procedure will ensure that your machine will continue to auto-level correctly and operate safely.

The Tilt Sensor is located within the GP400 Control Module. It is used by the control system to monitor machine level status, and is used by the outrigger system for auto-leveling. Correctly performing the Tilt Sensor Calibration will ensure that the machine will operate safely and that the outriggers will continue to auto-deploy correctly.

The Axle Sensor (Axle CAN Tilt angle transducer) is mounted to the front of the oscillating axle and provides information regarding the position of the axle relative to the chassis. This information is used to allow or disallow the drive function when the platform is elevated. If the front axle is more than 3° out of parallel with the chassis, the drive function will be cut out (interlocked).

Both sensors calibrate at the same time during the Tilt Sensor Calibration procedure.

1. Park machine on a flat level surface.
2. This machine is equipped with foam-filled tires. Be sure that all tires are in good condition and that the tires are all the same size.
3. Open the lower control box and plug the EZ-Cal into plug J-9 (4-pin connector) on the GP400. The display should light up and read “HELP - PRESS ENTER.
   a. Press the right arrow to access “ACCESS LEVEL 3”, press ENTER.
      - The display reads CODE 0000 with the cursor flashing.
   b. Press the Up and Right arrows to enter code 1775, Press Enter
      - Display reads “ACCESS LEVEL 2”
   c. Right arrow to SETUPS, Press Enter
      - Display reads ‘CHANGE DEFAULTS”
   d. Right arrow to TILT SETUPS, Press Enter
      - Display reads “CALIBRATE LEVEL”.
   e. Press Enter
      - Display reads “CALIBRATE LEVEL YES: ENTER NO: ESC”
   f. Press Enter
      - Display reads “CALIBRATE LEVEL YES: ENTER NO: ESC” plus has actual tilt percentages.
   g. Press Enter again.
      - The percentage numbers should be 0.0 - 0.0 (or very close).
   h. Level calibration is complete. Unplug the EZ-Cal or press ESC ESC ESC.

Height Calibration

Height calibration must be performed if the GP400 is replaced.

Skip this procedure if your machine is equipped with the optional Platform Load Sensing System.

For this procedure it is not necessary to place any load in the platform.

1. Drive machine to level ground, in area where it can reach full elevation.
2. Turn selector switch to Base controls.
3. Plug EZ-Cal into connector P9 on GP400 Control Module. EZ-Cal display reads HELP: PRESS ENTER
4. Press right arrow to ACCESS LEVEL 3, Press Enter.
   - Display reads CODE 0000
5. Press Up and Right Arrow to enter code 1775. Press Enter.
   - Display reads ACCESS LEVEL 2.
6. Press Right Arrow to SETUPS, Press Enter.
   - Display reads CHANGE DEFAULTS
7. Press Right Arrow to HEIGHT SETUPS, Press Enter.
   - Display reads CALIBRATE HEIGHT
8. Press Enter.
   - Display reads PLATFORM DOWN? Verify that platform is fully lowered.

9. Press Enter.
   - Display reads PLEASE LIFT.
10. Hold lower controls switch in the up position until machine is fully elevated, then release switch.
   - Display reads PLEASE LOWER.
11. Hold switch in down position until platform is in the fully lowered position. Release switch.
   - Display reads FINISHED.

Platform Load Sensing System Calibrations

Do not perform this procedure unless your machine is equipped with the optional Platform Load Sensing System.

Platform Load Calibration

Perform the Tilt Sensor Calibration outlined at the beginning of this section (“ Tilt Sensor Calibration” on page 60).

Platform Load Calibration must be performed any time the GP400 is replaced or significant repairs are made to the elevating assembly.

During the calibration procedure the platform is fully raised and lowered three times:
1. “DYNAMIC” calibration – fully loaded platform raised & lowered in one continuous movement. DYNAMIC measurements are taken.
2. “LOADED” calibration – fully loaded platform raised & lowered with stops to take measurements. STATIC measurements are taken.
3. “EMPTY” calibration – unloaded platform raised & lowered with stops to take measurements. STATIC measurements are taken.

The following procedure must be followed COMPLETELY to calibrate the Platform Load Sensing System. If any problem is detected, the procedure stops and an Error Message will display on the EZ-Cal. Explanations of each message and suggested corrections can be found in the section of this manual following the calibration procedure.

Note: If the calibration procedure is interrupted, completed phases do not need to be repeated. A “REDO” prompt will appear – answer “NO” if there is no reason to repeat the phase, or “YES” if the phase must be repeated (for example because the wrong platform load was used on the previous phase).

1. Drive machine to a flat, level surface where it can reach full elevation. Choose a place where the rated load can be placed in the platform and later removed without moving the machine.
2. Place the rated load in platform (see platform labels or serial plate). The load must be evenly distributed on the platform.
3. Turn selector switch to Base controls.
4. Plug EZ-Cal into connector P9 on GP400 Control Module. EZ-Cal display reads HELP: PRESS ENTER
5. Press right arrow to ACCESS LEVEL 3, Press Enter.
   - Display reads CODE 0000
6. Press up and right arrow to enter code 1775, Press Enter.
   - Display reads ACCESS LEVEL 2.
7. Press Right Arrow to SETUPS, Press Enter.

- Display reads CHANGE DEFAULTS

8. Press Right Arrow to LOAD SETUPS. Press Enter.
   - Display reads CALIBRATE LOAD
9. Press Enter.
   - Display reads PLATFORM DOWN? Verify that platform is fully lowered.
10. Press Enter.
    - Display reads PLATFORM LOADED? Verify that rated load is evenly distributed in platform.
11. Press Enter.
    - Display reads PLEASE LIFT.
12. Hold lower controls switch in the up position until machine is fully elevated, then release switch.
    - Display reads PLEASE LOWER.
13. Hold switch in down position until platform is in the fully lowered position. Release switch.
    - Display reads PLATFORM LOADED?
14. Ensure that the rated load is distributed evenly in the platform, then press Enter.
    - Display reads PLEASE LIFT.
15. Hold lower controls switch in the up position until machine is fully elevated, then release switch.
    - Display reads TOTAL DATA #XX, then PLEASE LOWER.

Note: The platform will rise incrementally during this phase on the calibration. Do not release the switch until fully elevated.

16. Hold switch in down position until platform is in the fully lowered position.

Note: The platform will lower incrementally during this phase on the calibration. Do not release the switch until fully lowered.

17. Release switch.
    - Display reads TOTAL DATA #XX, then PLATFORM EMPTY?
18. Remove the load from the platform.

Note: If you must switch to platform controls to move the machine, steps 1.] through 7.] must be repeated. Steps 12.] through 20.] will generate the REDO prompt. Answer NO. If machine was not moved, proceed to step 22.].

19. Press Enter.
    - Display reads PLEASE LIFT.
20. Hold lower controls switch in the up position until machine is fully elevated, then release switch.
    - Display reads TOTAL DATA #XX, then PLEASE LOWER.
21. Hold switch in down position until platform is in the fully lowered position.
    - Display reads TOTAL DATA #XX, then BUILDING TABLES, then CALDATE mm/dd/yy.
22. Enter current date using Up, Down and Right Arrows.
    - Display reads FINISHED.
23. Disconnect EZ-Cal.

The Platform Overload Sensing System is now calibrated.

Height Calibration

For this procedure it is not necessary to place any load in the platform.

1. Drive machine to a flat, level surface where it can reach full elevation.
2. Turn selector switch to Base controls.
3. Plug EZ-Cal into connector P9 on GP400 Control Module.
   - Display reads HELP: PRESS ENTER
4. Press right arrow to ACCESS LEVEL 3. Press Enter.
   - Display reads CODE 0000
5. Press Up and Right Arrow to enter code 1775. Press Enter.
   - Display reads ACCESS LEVEL 2.
6. Press Right Arrow to SETUPS. Press Enter.
   - Display reads CHANGE DEFAULTS
7. Press Right Arrow to HEIGHT SETUPS. Press Enter.
   - Display reads CALIBRATE HEIGHT
8. Press Enter.
   - Display reads PLATFORM DOWN?
9. Verify that platform is fully lowered. Press Enter.
   - Display reads PLEASE LIFT.
10. Hold lower controls switch in the up position until machine is fully elevated, then release switch.
    - Display reads PLEASE LOWER.
11. Hold switch in down position until platform is in the fully lowered position. Release switch.
    - Display reads FINISHED.

Calibration Problems

Failure Messages

Various problems can be detected by the EZ-Cal that prevent successful calibration. These problems are reported with a flashing message including an “F” code. The following descriptions are helpful in solving the problem. References in parentheses refer to electrical schematic points.

F01:CHECK HWFS
- This message is given if the startup tests have not completed.
- Check HELP message for more information.

F02:NOT GROUND MODE
- This message is given if the base/platform selector switch is not in ground mode (P7-2 must be high). Calibration can only be carried out in ground mode.

F03:NOT STOPPED
- This message is given if any function switch is closed. Check DIAGNOSTICS / SWITCHES to see which function switch is closed.

F04:TILTED
- This message is given if the machine is tilted. Calibration must be carried out with the machine level. If the machine is level, perform the Tilt Calibration procedure above.

F05:BAD HEIGHT
- This message is given if the height sensor output (P8-2 and P8-6) is out of range at the start of calibration. The height sensor output must be between 1.0V and 4.0V. Check DIAGNOSTICS / SENSORS to see the output. A reading of 0V or 5V is probably due to a wiring problem.

F06:CHECK ELEV
- This message is given if the elevation switch (P7-5) is open at the start of calibration, when the operator has confirmed the “PLATFORM DOWN?” question.
- If the platform is down, check the elevation switch wiring.

F08:CHECK ELEV
- This message is given if the elevation switch (P7-5) is closed at the end of the DYNAMIC lift, when the platform should be fully raised.
- This message would occur if the UP switch was accidentally opened near the start of the DYNAMIC lift.
- If the platform is fully raised, check the elevation switch wiring.

F09:BAD HEIGHT
- This message is given if the height sensor output (P8-2 and P8-6) is out of range at the start of the DYNAMIC lift. The height sensor output must be between 1.0V and 4.0V. Check DIAGNOSTICS / SENSORS to see the output. This is usually due to a wiring problem.

F10:BAD HEIGHT
- This message is given if the height sensor output (P8-2 and P8-6) is out of range at the end of the DYNAMIC lift. The height sensor output must be between 1.0V and 4.0V. Check DIAGNOSTICS / SENSORS to see the output. A reading of 0V or 5V is probably due to a wiring

problem.

F11:NOT UP

- This message occurs at the start of the DYNAMIC lift if the operator selects a function other than UP.

F12:TOO MANY

- This message occurs if the DYNAMIC lift takes too long.
- This message could occur if the UP switch was not released at the end of the dynamic lift.

F13:LOW HEIGHT RANGE

- This message occurs at the end of the DYNAMIC lift if the height sensor output did not change sufficiently to give a reasonably accurate platform height estimate. DIAGNOSTICS / ANALOGS can be used to check the height sensor output (P8-2 and P8-6) when the platform is fully lowered and fully raised; a difference of at least 1V is to be expected.
- This message could occur if the UP switch was accidentally opened too early (when the platform is not fully raised).

F14:BAD HEIGHT

- This message occurs if the height sensor output (P8-2 and P8-6) is out of range during the DYNAMIC lift. The height sensor output must be between 1.0V and 4.0V. Check DIAGNOSTICS / SENSORS to see the output. A reading of 0V or 5V is probably due to a wiring problem.

F15:CHECK ELEV

- This message is given if the elevation switch (P7-5) is open when the platform has been fully lowered after the DYNAMIC lift.
- This message would occur if the DOWN switch was accidentally opened before the platform was fully lowered.
- If the platform is fully lowered, check the elevation switch.

F16:LOW ELEV.OPEN

- This message is given if the elevation switch (P7-5) opened during lift at too low of a height (below 5%). Check CALIBRATIONS / HEIGHT CALS. The “ElevUp” value shows the recorded height where the switch opened.

F17:HIGH ELEV.OPEN

- This message is given if the elevation switch (P7-5) opened during lift at a too high height (above 25%).
- Check CALIBRATIONS / HEIGHT CALS; the “ElevUp” value shows the recorded height where the switch opened.

F18:LOW ELEV.CLOSE

- This message is given if the elevation switch (P7-5) closed during lower at a too low height (below 5%).
- Check CALIBRATIONS / HEIGHT CALS; the “ElevDown” value shows the recorded height where the switch opened.

F19:HIGH ELEV.CLOSE

- This message is given if the elevation switch (P7-5) closed during lower at a too high height (above 25%).

- Check CALIBRATIONS / HEIGHT CALS; the “ElevUp” value shows the recorded height where the switch opened.

F20:HEIGHT<>0%
F21:HEIGHT<>0%

- This message occurs if the platform height is not 0% after the platform has been fully lowered at the end of a calibration step. The platform must return to the same height each time it is fully lowered.
- Check DIAGNOSTICS / SYSTEM to check the height.

F22:HEIGHT<>100%
F23:HEIGHT<>100%

- This message occurs if the platform height is not 100% after the platform has been fully raised during a calibration step. The platform must return to the same height each time it is fully raised. Check DIAGNOSTICS / SYSTEM to check the height.

F24:TOO MANY

- This message occurs if too many static measurements are taken during a calibration step.
- In the rare event that this occurs, please call MEC for assistance.

F25:CHECK ELEV
F26:CHECK ELEV

- This message indicates a problem with the elevation switch (P7-5) during the STATIC phases.
- The switch is either staying closed to a higher height, or staying open to a lower height, than that recorded during the DYNAMIC phase.

F27:BAD HEIGHT

- This message indicates a problem with the height sensor output (P8-2 and P8-6) during the STATIC calibration phases.
- The height sensor output must be between 1.0V and 4.0V at all times.
- Check DIAGNOSTICS / SENSORS to see the output. A reading of 0V or 5V is probably due to a wiring problem.

F30:BAD HEIGHTS

- This message indicates that the recorded heights are not increasing during STATIC lift, or are not decreasing during STATIC lower.
- This problem may be caused by repeatedly opening and closing the UP or DOWN switch during the STATIC phases.

F31:REJECT CURVE

- The DYNAMIC pressure curve is unacceptable.
- An initial pressure peak when the platform lifted cannot be found between 0% and 15% height.
- Check for proper weight in the platform and check pressure sensor and lift cylinder hydraulics.

F32:REJECT CURVE

- The DYNAMIC pressure curve is unacceptable.
- There should be a lowest pressure about halfway through the lift (i.e.: near 50% height); the lowest pressure measured is at too low a height.
- Check for proper weight in the platform and check pressure sensor and lift cylinder hydraulics.

F33:REJECT CURVE

- The DYNAMIC pressure curve is unacceptable.
- There should be a lowest pressure about halfway through the lift (i.e.: near 50% height); the lowest pressure measured is at too high a height.
- Check for proper weight in the platform and check pressure sensor and lift cylinder hydraulics.

F34:REJECT CURVE

- The DYNAMIC pressure curve is unacceptable.
- There is not enough difference between the initial pressure peak and the minimum pressure.
- Check for proper weight in the platform and check pressure sensor and lift cylinder hydraulics.

F40:REJECT DELTA

- This message indicates that there is not enough difference between the loaded & empty pressure.
- This message could occur if the platform were not properly loaded during the STATIC LOADED phase, or if the platform were not properly empty during the STATIC EMPTY phase.
- This message could also occur if the wrong pressure sensor was fitted (e.g.: a 5000psi sensor when a 3000psi one is needed).
- Check CALIBRATIONS / HEIGHT CALS; the “Height” indicates the first height at which there was insufficient difference and the “Up” and “Down” values show the loaded pressure (first) and the difference between loaded and empty pressure (second).

F42:LOW PRESSURE

- This message indicates that the pressure is too low (0.5V or less) when the elevation switch opens during the DYNAMIC lift.
- This message would occur if the pressure sensor was disconnected, or if there were some other wiring error.
- Check DIAGNOSTICS / SENSORS to check the pressure.

F43:HIGH PRESSURE

- This message indicates that the pressure is too high (4.5V or more) when the elevation switch opens during the DYNAMIC lift.
- This message would occur if the wrong pressure sensor was fitted, or if there were some other wiring error.
- Check DIAGNOSTICS / SENSORS to check the pressure.

F44:LOW PRESSURE

- This message indicates that the pressure is too low (0.5V or less) at a STATIC measurement point.
- This message would occur if the pressure sensor was disconnected, or if there were some other wiring error.
- Check DIAGNOSTICS / SENSORS to check the pressure.

F45:HIGH PRESSURE

- This message indicates that the pressure is too high (4.5V or more) at a STATIC measurement point.
- This message would occur if the wrong pressure sensor was fitted, or if there were some other wiring error.
- Check DIAGNOSTICS / SENSORS to check the pressure.

F46:CHECK ELEV

- This message indicates that the elevation switch opened more than once during the DYNAMIC lift.

F47:CHECK ELEV

- This message indicates that the elevation switch closed more than once during the DYNAMIC lower.

F48:BAD PRESSURE

- This message is given if the pressure sensor output (P8-2 and P8-6) is out of range at the start of calibration.
- The height sensor output must be between 0.5V and 4.5V.
- Check DIAGNOSTICS / SENSORS to see the output. A reading of 0V or 5V is probably due to a wiring problem.

F52:NOT CALIBRATED

- This message is a catch-all code which indicates an improper calibration sequence or that one of the phases of calibration was not completed. The skipped phase must be completed or the calibration sequence must be passed through in proper sequence before this message will clear. Re-start the calibration sequence and proceed through each sequence in the specified order.
- A “Redo” prompt will appear before each sequence. Answer “NO” if there is no reason to repeat or “YES” if the phase must be completed.

Information Messages

During calibration the following messages will be displayed. They are informational prompts only and do not indicate a failure.

BUILDING TABLES

- This message indicates that the STATIC measurements are being used to build calibration data - the process should take no more than 5s.

CALDATE:

- This message is prompting for the date to be entered; it is stored to identify when the machine was calibrated.
- The last calibrate date can be viewed in DIAGNOSTICS / LOG.
- Press LEFT & RIGHT to select the flashing digits.
- Press UP & DOWN to change the flashing digits.
- Press ENTER when the entry is complete.
- IMPORTANT: The date 00/00/00 is not allowed!

FINISHED

- This message confirms that calibration is complete and successful.

GO DOWN MORE!

- This message occurs if the DOWN switch is released during either STATIC lowering phase, when more measurements are needed (before the platform is fully lowered).

GO UP MORE!

- This message occurs if the UP switch is released during either STATIC lifting phase, when more

measurements are needed (before the platform is fully raised).

LIFT EMPTY
- This message is displayed during the STATIC empty phase while the platform is being raised to the next measurement height.

LIFT LOADED
- This message is displayed during the STATIC loaded phase while the platform is being raised to the next measurement height.

LIFTING
- This message is displayed during the DYNAMIC phase while the platform is being raised.

LOWER EMPTY
- This message is displayed during the STATIC empty phase while the platform is being lowered to the next measurement height.

LOWER LOADED
- This message is displayed during the STATIC loaded phase while the platform is being lowered to the next measurement height.

LOWERING
- This message is displayed during the DYNAMIC phase while the platform is being lowered.

MEASURING #
- This message is displayed when the platform is stopped during either STATIC phase, when the GP400 takes a measurement.
- There will be a short delay while the machine is allowed to stabilize after movement is stopped.

MUST GO DOWN!
- This message occurs if the wrong switch is operated when the GP400 is waiting for the platform to be lowered.

MUST GO UP!
- This message occurs if the wrong switch is operated when the GP400 is waiting for the platform to be raised.

PLATFORM DOWN?
- This message is prompting for confirmation that the platform is fully lowered. If necessary the DOWN switch can be activated to lower the platform.
- Press ENTER to confirm when the platform is fully lowered.

PLATFORM EMPTY?
- This message is prompting for confirmation that the platform is completely empty.
- Press ENTER to confirm when the platform is empty.

PLATFORM LOADED?
- This message is prompting for confirmation that the platform is loaded to rated load: 1500 lbs (US/CSA), 680 Kgs (CE/AU). (100% of the load rating listed on the serial plate).
- Press ENTER to confirm when the platform is loaded.

PLEASE LIFT …
- This message is prompting for the platform to be raised.
- The UP switch should be operated.

PLEASE LOWER …
- This message is prompting for the platform to be lowered.
- The DOWN switch should be operated.

PLEASE WAIT
- This message indicates that the is busy; the delay will be short (no more than 5s).

REDO DYNAMIC:
- This message is displayed if the DYNAMIC phase of load calibration has previously been completed.
- Press ENTER when “NO” is displayed if there is no need to redo the DYNAMIC phase.
- Press UP or DOWN to display “YES” then press ENTER if it is necessary to redo the DYNAMIC phase.
- If the previous DYNAMIC calibration was in error, or if the height or pressure sensor is replaced, it will be necessary to redo the DYNAMIC phase.

REDO EMPTY:
- This message is displayed if the EMPTY phase of load calibration has previously been completed.
- Press ENTER when “NO” is displayed if there is no need to redo the EMPTY phase.
- Press UP or DOWN to display “YES” then press ENTER if it is necessary to redo the EMPTY phase.
- If the previous EMPTY calibration was in error, or if the pressure sensor is replaced, it will be necessary to redo the EMPTY phase.

REDO LOADED:
- This message is displayed if the LOADED phase of load calibration has previously been completed.
- Press ENTER when “NO” is displayed if there is no need to redo the LOADED phase.
- Press UP or DOWN to display “YES” then press ENTER if it is necessary to redo the LOADED phase.
- If the previous LOADED calibration was in error, or if the pressure sensor is replaced, it will be necessary to redo the LOADED phase.

TOTAL DATA:
- This message is displayed at the end of each phase, to confirm the number of measurements recorded by the GP400. No operator input is required during this process.

Mechanical Components

This section describes the major components of the machine and the steps required to service them.

Base

CAUTION

When steam cleaning or pressure washing the base/undercarriage, cover electrical components to prevent water penetration.

Steam clean the base as necessary, and inspect all welds and brackets. Check for cylinder pins that have turned in their mounting, which may indicate sheared retaining pins.

Tires & Wheels

Inspect for cuts, chunking, side-wall damage, or abnormal wear. Any tire faults MUST BE CORRECTED before further machine operation. Refer to Parts sections for replacement tires.

DANGER

FAILURE TO USE APPROVED PARTS MAY CAUSE DEATH OR SERIOUS PERSONAL INJURY.

REPLACE TIRES WITH THE CORRECT TIRES TO MAINTAIN THE RATING OF THE EQUIPMENT.

FOAM FILLED TIRES WERE FITTED AS ORIGINAL EQUIPMENT ON THIS MACHINE. TIRES MUST BE REPLACED WITH EQUIVALENT SPECIFICATION TIRES AND FOAM-FILL WEIGHT. CONTACT MEC SERVICE.

Changing Tires

Refer to “Lift and Support The Machine” in Section 9 - Transport And Lifting Instructions for instructions and safety precautions.

CAUTION

Always block the wheels before lifting the machine.

1. Chock tires on the end of machine opposite the tire to be changed.
2. Break loose but do not remove lug nuts before raising the machine.
3. Lift the end of machine requiring a tire change and support with jackstands of adequate capacity.
4. Remove lug nuts and pull the wheel off.
5. Install the replacement wheel.
6. Install lug nuts and tighten.
7. Lower the machine.
8. Tighten lug nuts to proper torque (Refer to machine specifications).

9. Remove the chocks.

Drive Motors & Gear Hubs

There is one hydraulic drive wheel motor and one gear hub located at each wheel.

CAUTION

- **Clean all fittings before disconnecting hoses.**
- **Tag hoses for proper reassembly.**
- **Plug all openings immediately to prevent contamination.**
- **Replace any O-rings and inspect all hoses for crack and damage before reassembly.**

Front Drive Motors & Gear Hubs

Refer to “Lift and Support The Machine” in Section 9 - Transport And Lifting Instructions for instructions and safety precautions.

Removal

1. Raise and support the front end of machine.
2. Remove the wheel and tire assembly.
3. Remove the retaining pins that secure the steer cylinder and the tie rod to the motor/hub housing. Rotate the housing to access the drive motor.
4. Clean all hydraulic fittings, then tag all hoses for proper reassembly.
5. Disconnect all hydraulic hoses. Immediately plug all openings to prevent contamination.
6. Support the drive motor, then remove the two bolts connecting the drive motor to the gear hub. Remove the motor.
7. Support the gear hub, then remove the six bolts holding the gear hub to the motor/hub housing. Carefully remove the gear hub.
8. Installation is reverse of removal. Apply one (1) drop of Loctite® to mounting bolts. Replace the O-ring on the brake release port of the gear hub. Take great care that this O-ring is installed correctly. Use grease to hold the O-ring in place during installation.

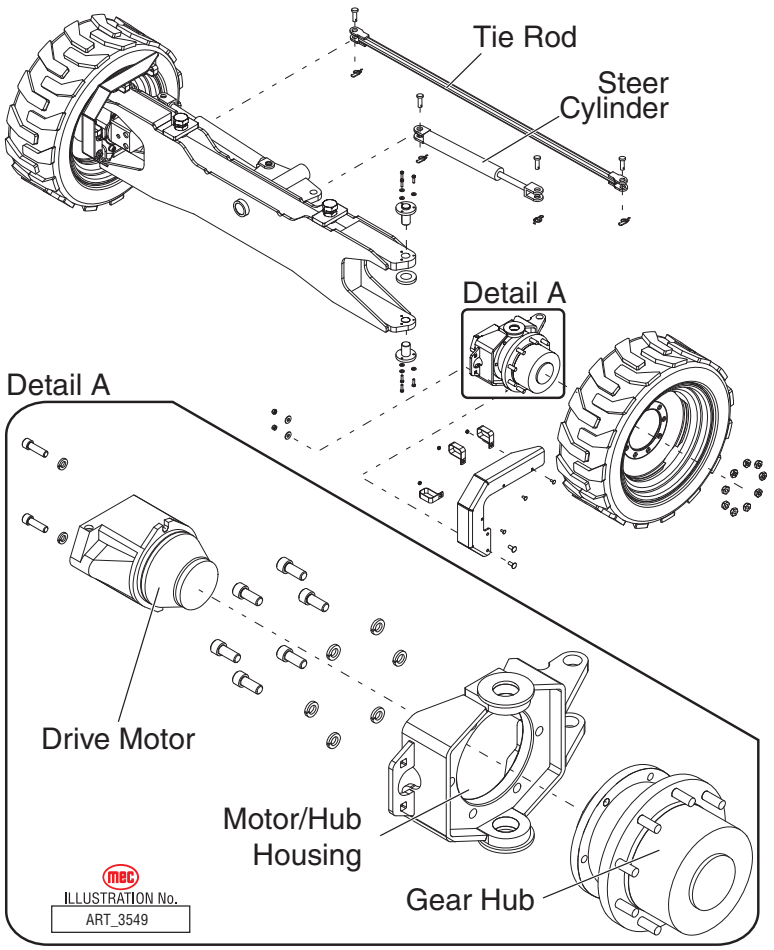

Rear Drive Motors

Refer to “Lift and Support The Machine” in Section 9 - Transport And Lifting Instructions for

instructions and safety precautions.

Removal

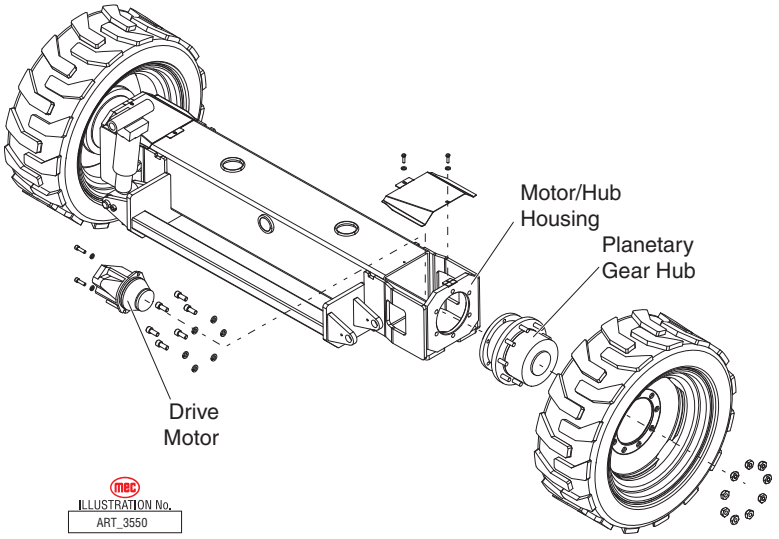

1. Raise and support the rear end of machine.
2. Remove the wheel and tire assembly.
3. Remove the motor cover.
4. Clean all hydraulic fittings, then tag all hoses for proper reassembly.
5. Disconnect all hydraulic hoses. Immediately plug all openings to prevent contamination.
6. Support the drive motor, then remove the two bolts connecting the drive motor to the gear hub. Remove the motor.
7. Support the gear hub, then remove the six bolts holding the gear hub to the motor/ hub housing. Carefully remove the gear hub.
8. Installation is reverse of removal. Apply one (1) drop of Loctite® to mounting bolts. Replace the O-ring on the brake release port of the gear hub. Take great care that this O-ring is installed correctly. Use grease to hold the O-ring in place during installation.

Drive Motors

MEC does not recommend end-user maintenance or repair of the drive motors. Contact MEC for the nearest service provider.

Gear Hubs

Lubrication

- Change the oil after the first 100 hours of operation
- Change the oil every 2500 hours or every 12 months thereafter.
- Use SAE 90 Multipurpose Hypoid Gear Oil, API Service Classification GL5

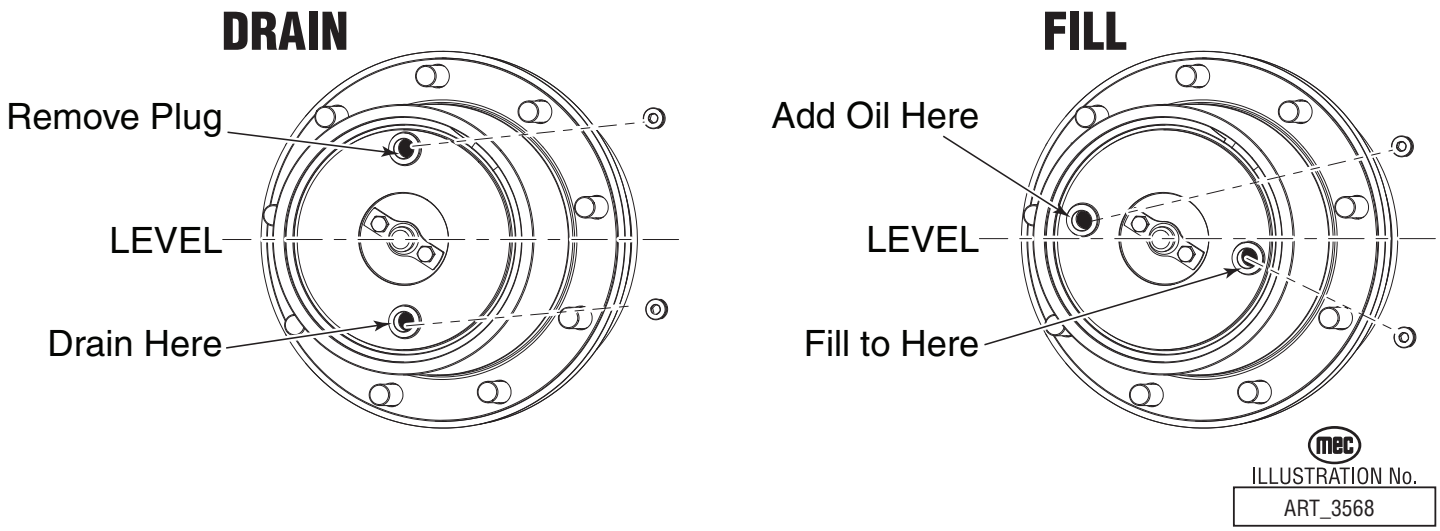

To change the oil in the gear hub:

1. Position the gear hub as shown at left.
2. Loosen and remove the both plugs and allow oil to drain.
3. Position the gear hub as shown at right.
4. Fill with oil until the level reaches the lower drain hole.
5. Replace the plugs, using new seals.

R & R Gear Hubs - 5492RT

Disassembly

Disassembly may be necessary to replace the seals or repair the brake release mechanism.

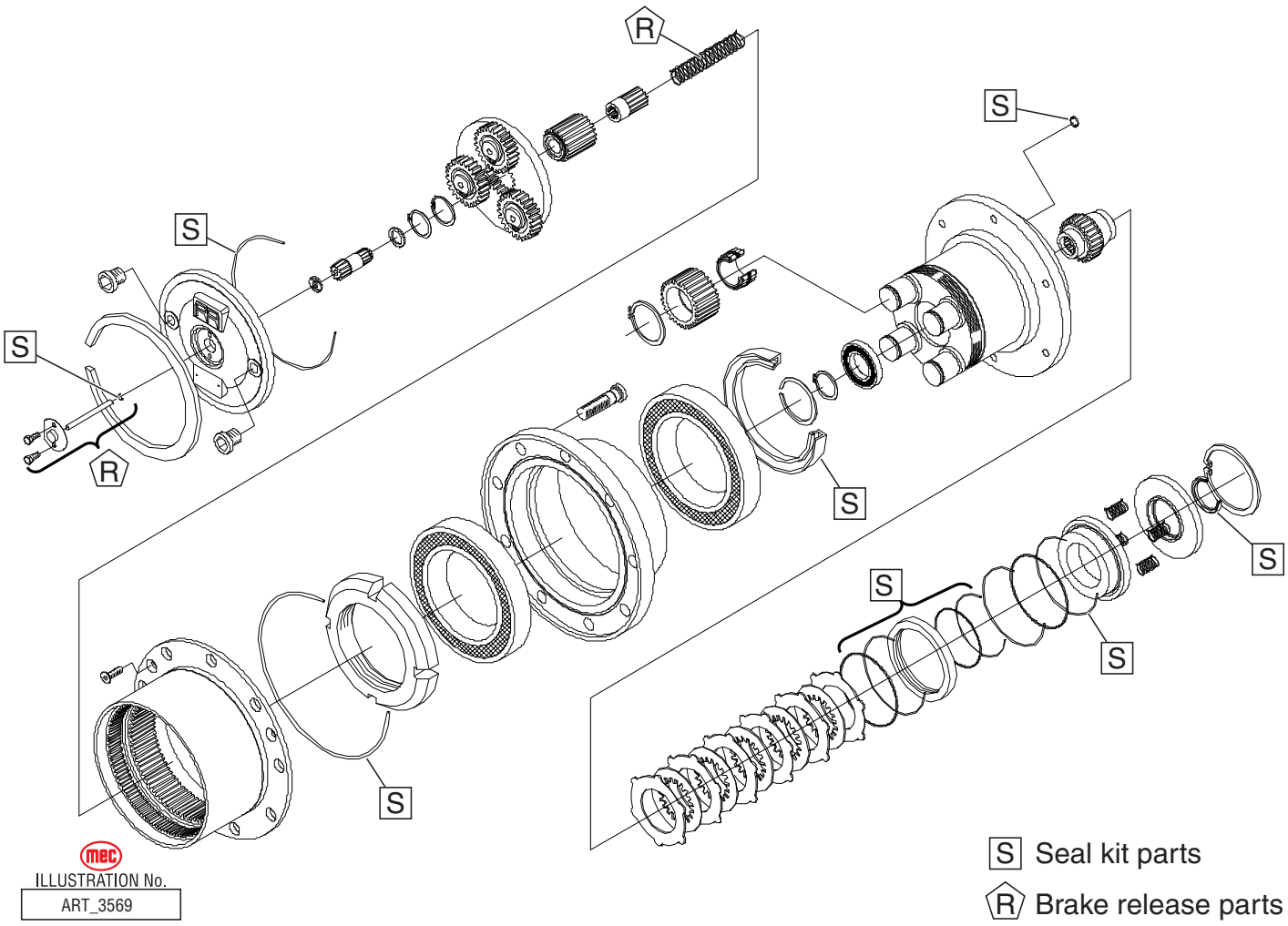

1. Unscrew the plug and drain the oil into a container. Dispose of used oil properly.

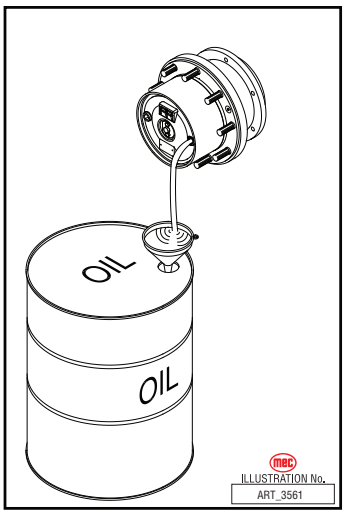

2. Remove the snap ring and cover.

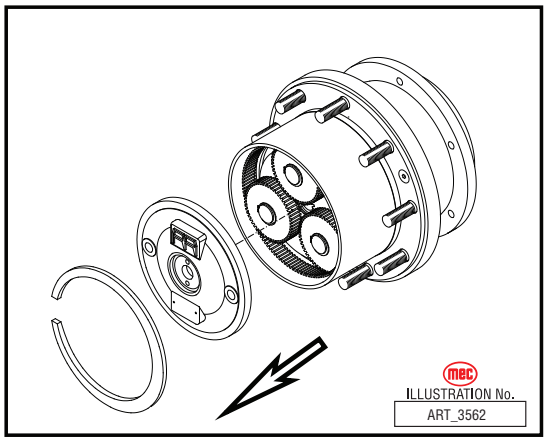

3. Pull out the pinion and the first stage reduction unit.

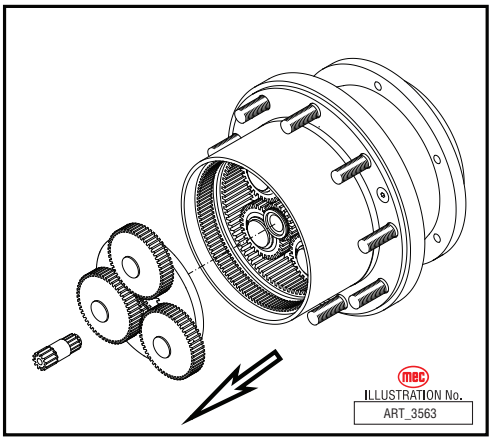

4. Remove the securing screws and remove the planetary ring.

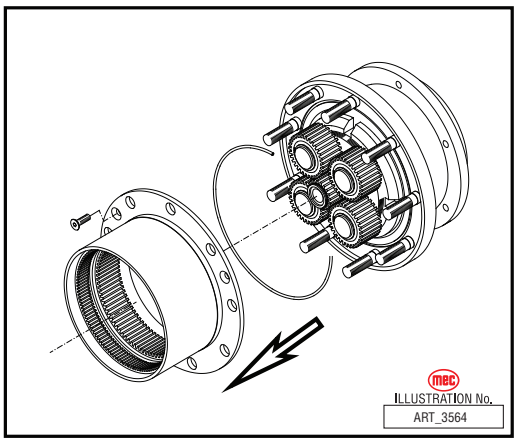

5. Remove the pinion and satellites of the second reduction unit stage.

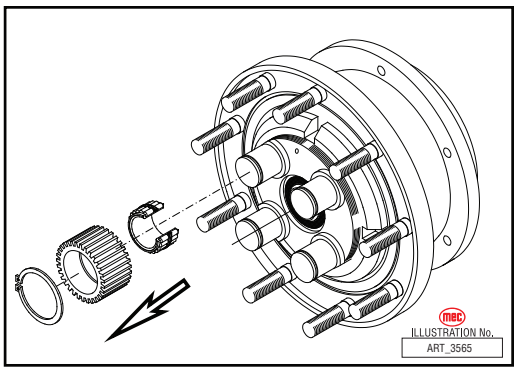

6. Unscrew the locking ring and remove the spindle from the hub support.

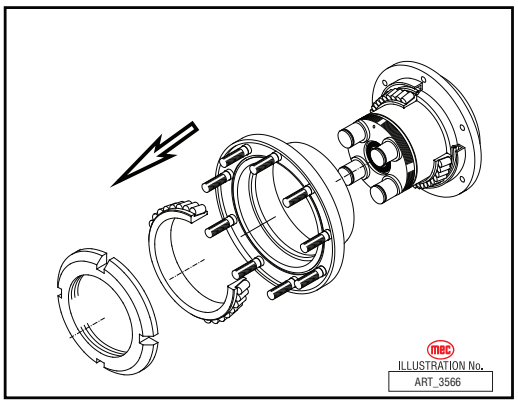

7. Turn the spindle upside down and remove the brake unit.
8. Reassemble in reverse order, replacing seal kit and/or brake release kit components as you go. Use a light petroleum-based oil to lubricate parts and seals during reassembly.

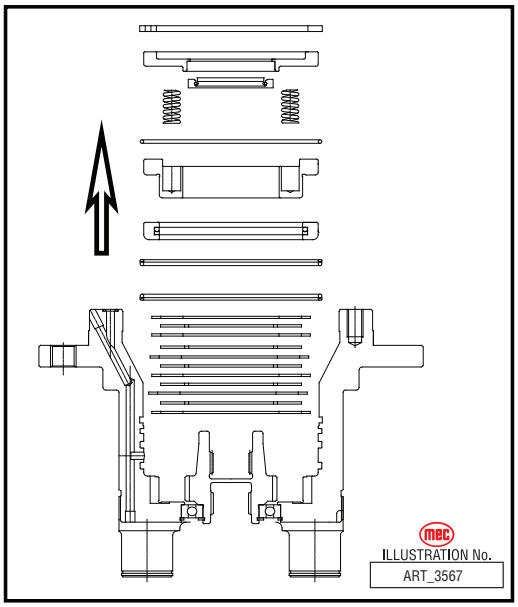

Fairfield Gear Hubs -- 3392RT-T ~#13600044

Brake Repair

Disassembly

1. Compress the brake piston compression springs;
   - Install two (2) ¼–20 × 5/8” flat head cap screws (provided in brake kit) through the pressure plate and into the piston.
   - Tighten one screw, then the other, a little at a time. Alternate screws until the springs compress and there is no pressure on the retaining ring.
2. Use retaining ring pliers to remove the retaining ring.
3. Remove pressure plate;

- Loosen one screw, then the other, a little at a time.
- Alternate screws until the springs are loose.
- Remove the cap screws and pressure plate.
- Remove the compression springs.

4. Use air pressure to remove the brake piston;
   - Using an air hose, slowly and carefully pressurize the brake port until the piston is partially out of the piston bore.
   - Pull the piston the rest of the way out by hand.
5. Remove the backup rings and O-rings from the grooves in the piston.
6. Remove the reaction discs (rotors) and the friction discs (stators) from the brake cavity.

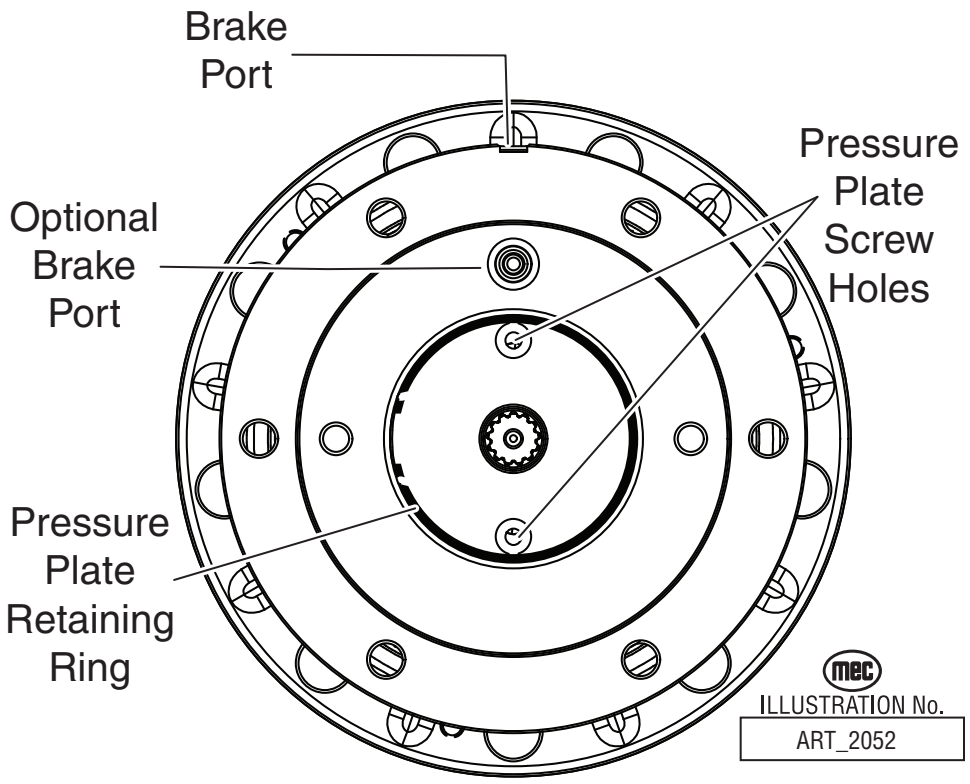

Assembly

1. Install brake kit;
   - Place a stator (friction disc) then a rotor (reaction disc) into the brake cavity, until there are nine (9) stators and eight (8) rotors (refer to illustration).
2. Install the brake piston seals;
   - Place the piston on a clean surface with the small opening facing upward.
   - Apply grease to the O-rings and backup rings.
   - Install the large diameter backup ring into the large diameter grove on the piston.
   - Install the large diameter O-ring on top of the backup ring.
   - Install and fully seat the small diameter O-ring into the small diameter groove on the piston.
   - Install the small diameter backup ring on top of the O-ring.
3. Insert the piston into the piston bore until it contacts the stator (friction disc).
4. Place the ten (10) springs into the piston.
5. Place the pressure plate on top of the springs and compress the springs (see Step 1 of Disassembly).
6. Install the retaining ring, making sure it is fully seated.
7. Remove the two (2) cap screws or the brake will not function.

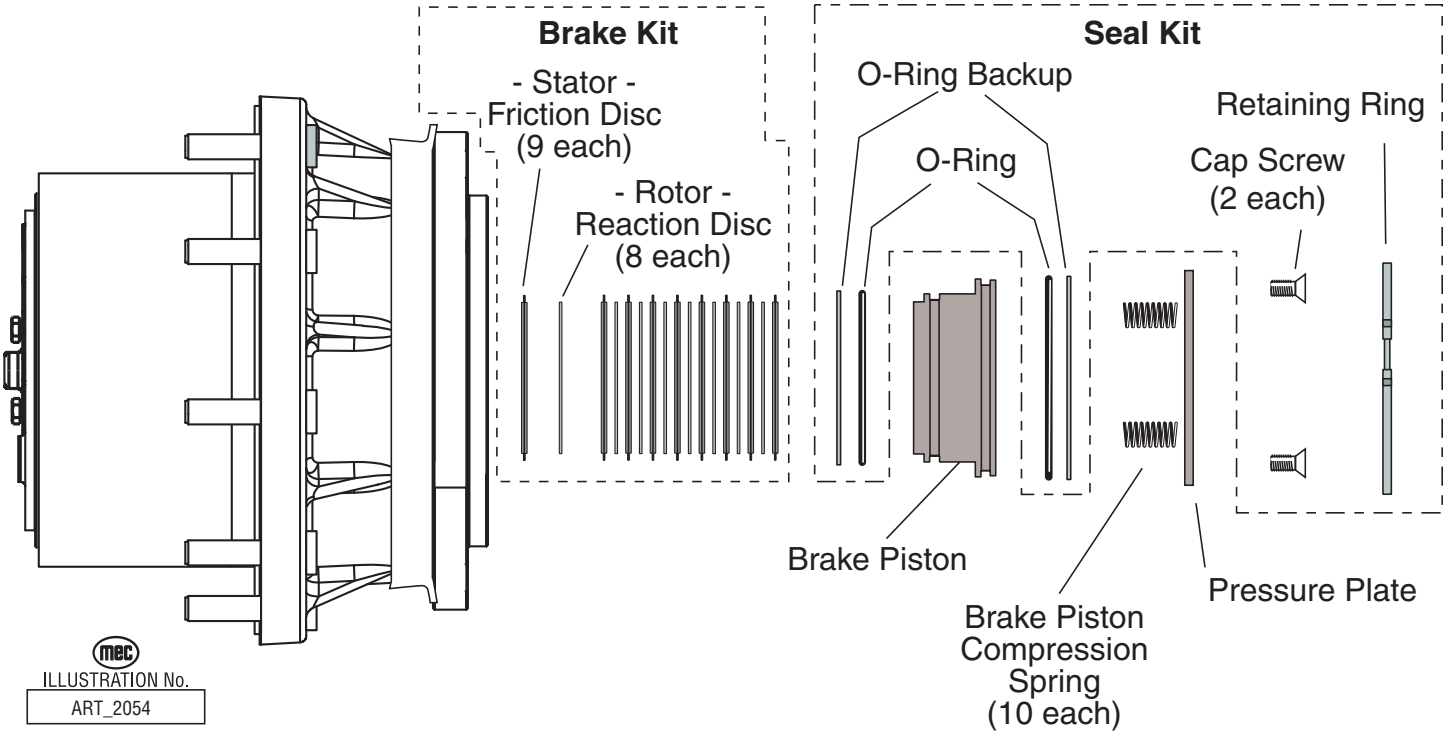

End Cover

Disassembly

Remove torque hub and move to a clean work surface.

CAUTION **Wear eye protection.**

1. Drain fluid from torque hub. Note the condition and volume of the fluid.
2. Remove the retaining ring.
   - Pry the open end of the retaining ring out of the groove with a screwdriver.
   - Use pliers to pull the retaining ring completely out of the groove.
3. Remove the cover subassembly.
   - The unit can be carefully pressurized with air to pop the cover out of the unit.
4. Remove the large diameter O-ring from the groove in the cover.
5. Remove the two (2) bolts from the disengage cap and remove the disengage cap.
6. Pull the disengage rod out from the cover.
7. Use appropriate tool to remove the disengage O-ring from the internal grove in the cover.
8. Remove the O-ring plugs from the cover.

Assembly

1. Grease the disengage O-ring and insert into the internal groove in the cover.
2. Install the disengage cap and torque bolts to 70–80 in. lbs (8–9 Nm).
3. Insert the disengage rod, either end first, into the hole in the cover until it touches the disengage cover.
4. Grease the face of the thrust washer and place in the cover making sure the tangs on the

washer seat into the pockets on the cover.

5. Install the O-ring plugs into the cover. Hand tighten only.
6. Grease the cover O-ring and insert it into the grove in the cover.
7. Install the cover and the retaining ring, making sure that the retaining ring is fully seated.

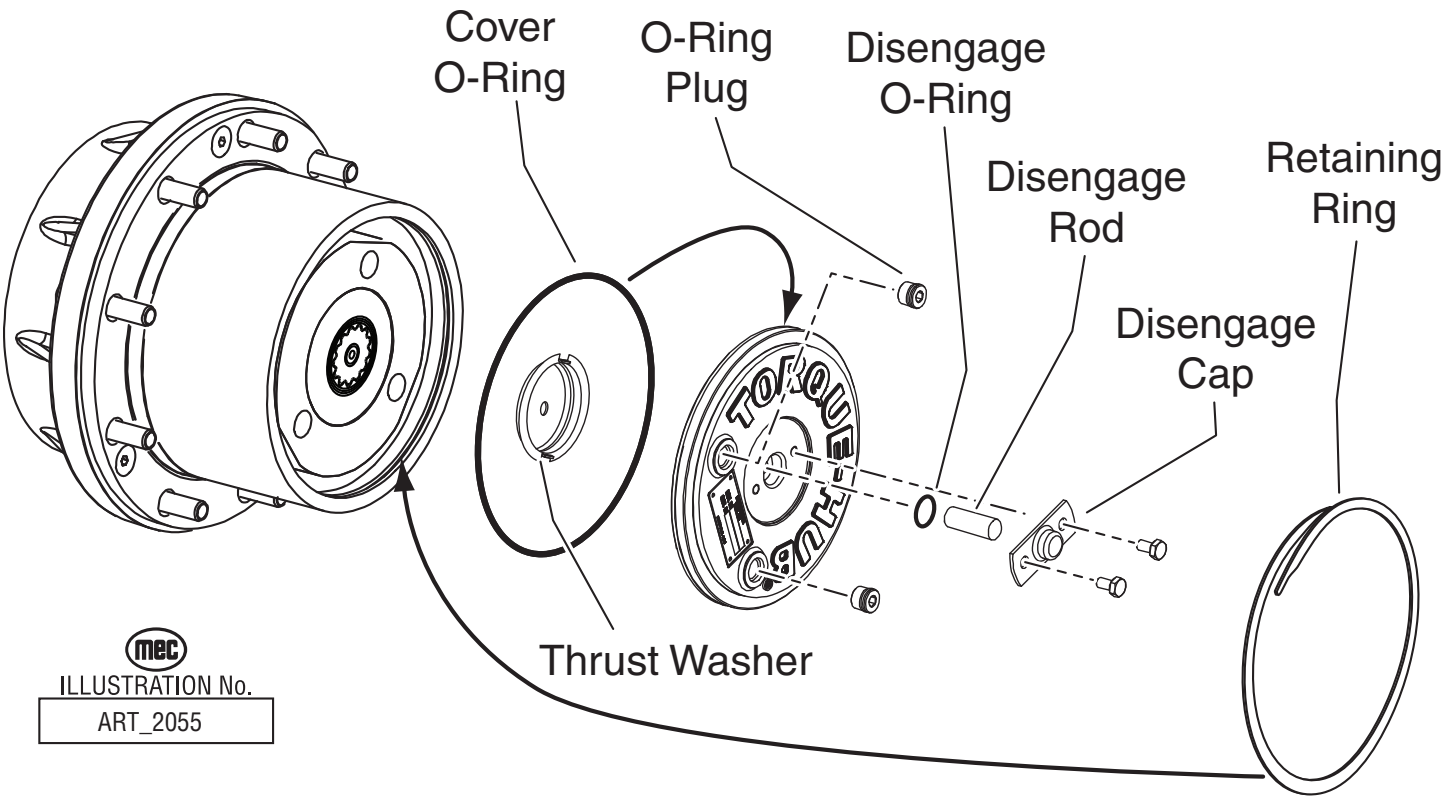

Replace Bearings

Disassembly

Remove torque hub and move to a clean work surface.

CAUTION **Wear eye protection.**

1. Remove the Ring Gear Subassembly;
   - Remove the three (3) flathead bolts that secure the ring gear subassembly to the housing.
   - Lift the ring gear subassembly off of the housing.
   - Remove the O-ring from between the housing and ring gear subassembly.
2. Remove the planet gears;
   - Use a 1/8” diameter punch to drive the roll pin into the planet shaft until it bottoms against the spindle.
   - Using needle nosed pliers of a hooked tool, reach into the end of the planet shaft to grasp the roll pin and pull the planet shaft out of the spindle.
   - Drive the roll pin out of the planet shaft.

Note: Use new roll pins when reassembling the unit.

- Slide the planet gear subassembly out of the spindle being careful not to drop the needle bearings.
- Repeat for the two (2) remaining planet gears.

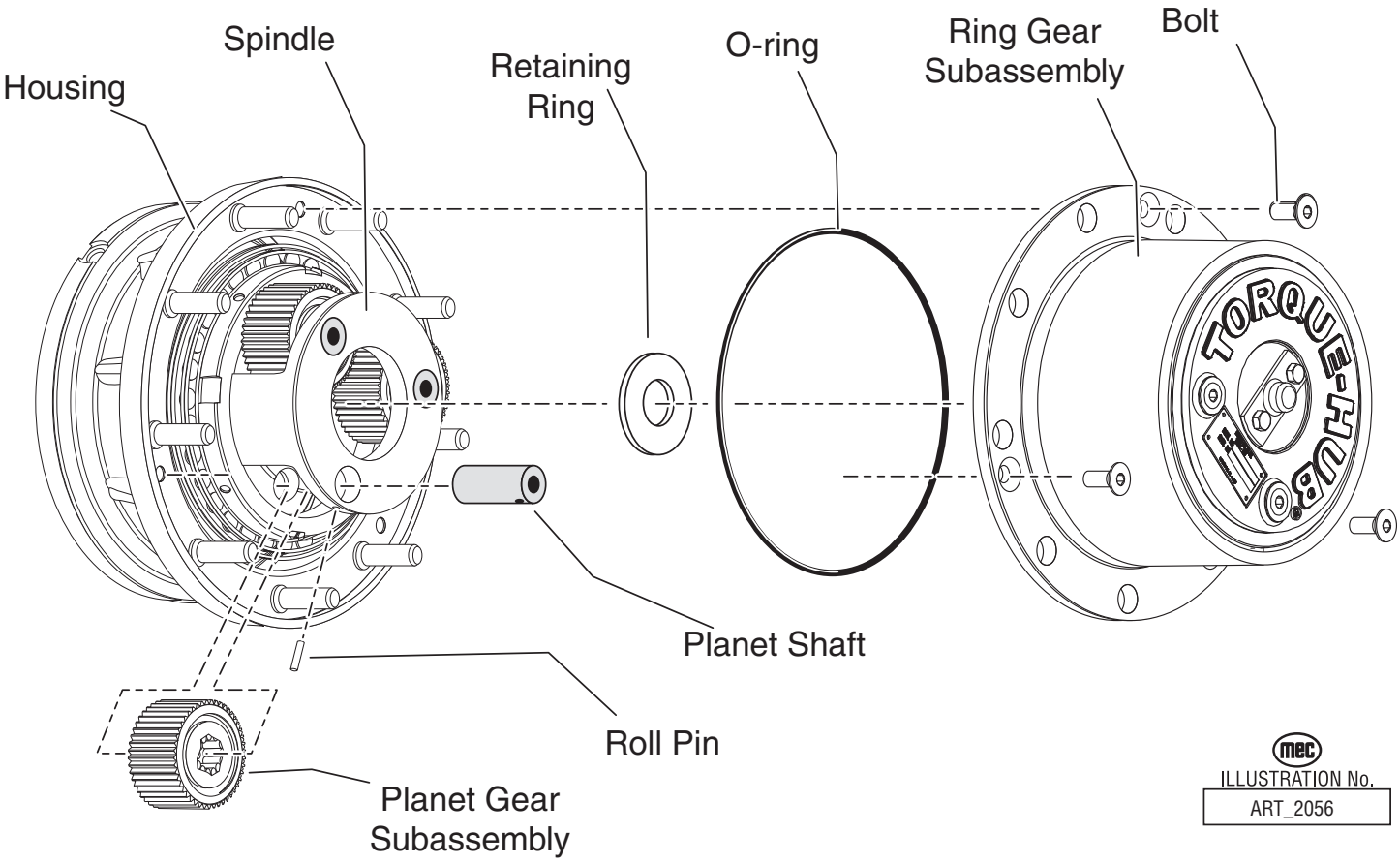

3. Remove the bearing nut;
   - Place the housing and spindle assembly on a clean surface with the spindle end down.
   - Remove the two (2) set screws and the bearing nut.

Note: The set screw holes in the bearing nut were staked to prevent the set screws from backing out. It will be necessary to clean up the holes prior to removing the set screws.

4. Remove the bearing cones;
   - Remove the outer bearing cone.
   - Turn the unit on its side and press the spindle out of the housing.
   - Remove the inner bearing cone.
5. Remove the seal boot.
6. Remove the lip seal from the housing.

Note: Use a new seal when reassembling.

7. Remove the bearing cones;
   - Use a soft steel rod to knock both bearing cones out of the housing.

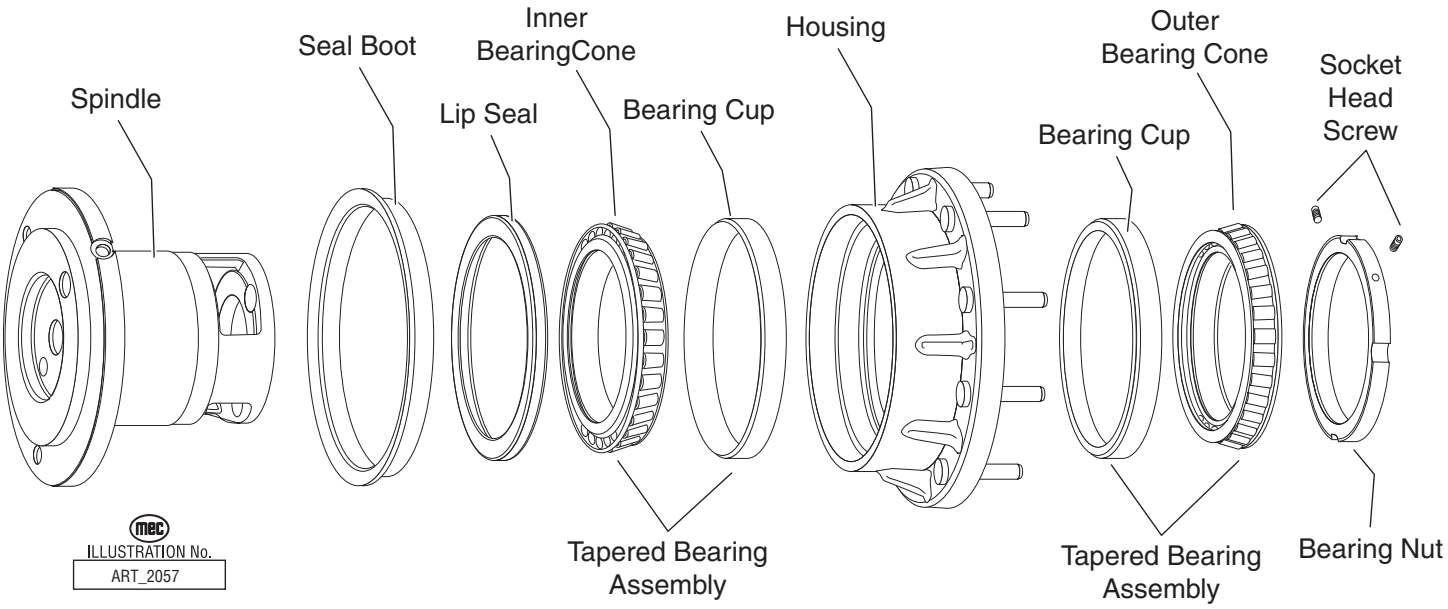

Assembly

Note: Spray a light film of oil on all component parts during assembly. Spray a generous amount of oil on bearings during installation.

1. Use a pressing tool to press both bearing cups into the housing.
2. Place the inner bearing cone into the inner bearing cup.
3. Grease the seal lip and use an appropriate tool to press the seal into the housing until it is flush with the end of the housing.
4. Place the spindle on the work surface, flange side down, and install the seal boot.
5. Lower the housing onto the spindle.
6. Place the outer bearing cone into the outer bearing cup.
7. Install the bearing nut;
   - Apply Loctite 243 on bearing nut thread and install the bearing nut.
   - Leave .003–.005 inches (.076–.127mm) end play to check the initial rolling torque with the unit tied down.
   - Torque the bearing nut until the rolling torque is 40–50 In. Lbs. (4–5 Nm) greater than initial rolling torque.

Note: Final torque is initial rolling torque plus 40–50 in. lbs. (4–5 Nm). E.g., if the initial rolling torque is 30 in. lbs. (3.5 Nm), the final rolling torque is 70–80 in. lbs. (8–9 Nm). Be sure the torque wrench is tangent to the housing OD.

8. Install the set screws into the bearing nut threaded holes.
   - Make sure set screw is driven into the spindle thread.
   - Tighten the set screws to damage the thread.
   - Stake the edge of the nut around the set screws so the nut will not loosen.
9. Place thrust washer into the counter-bore of the spindle.
10. Install planet gear subassemblies;
    - Place a planet gear subassembly into the spindle and align the planet gear bore with a planet shaft hole.
    - Insert a planet shaft (roll pin hole up) into the planet shaft hole and through the planet gear subassembly with.

- Use a punch or similar tool to align the roll pin holes on the shaft and spindle.
- Being careful not to strike the planet gears, drive the roll pin into the roll pin holes until the pin is flush with the OD of the spindle.
- Repeat for the remaining planet gear subassemblies.

11. Grease the O-ring and place it into the groove on the housing.
12. Place the ring gear subassembly onto the housing and spindle assembly.
13. Align the three (3) cap screw holes.

Install the cap screws and torque to 15–20 ft. lbs. (20–27 Nm).

Omnigear Gear Hubs -- 6092RT, 3392RT-T #13600045~

For information regarding the OmniGear hubs used on 6092RT and later 3392RT-T models, please contact MEC Customer Service at 1-877-632-5438.

Hoses & Cables

Note: Refer to Section 19 - Hydraulics for detailed hydraulic hose diagrams.

CAUTION

- **Clean all fittings before disconnecting hoses.**
- **Tag hoses for proper reassembly.**
- **Plug all openings to prevent contamination.**
- **Replace any O-rings and inspect all hoses for crack and damage before reassembly.**

Inspect all hoses and electrical cables for security and damage. Hoses and cables should be examined for rubbing and chafing.

Check all ties and clamps that keep hoses secure.

Check for leaks at fittings. Replace any damaged hose or cable.

1. Tag hoses for proper reassembly.
2. Disconnect hydraulic hoses. Immediately cap and plug all openings to prevent contamination.
3. Torque hose fittings according to the Hydraulic Torque Specification Table located in Section 4 - Torque Specifications of this manual.

Steer Cylinders

There are two (2) double acting type steer cylinders on this machine. During operation, cylinder(s) should not leak, but a slight damping at the rod seal is acceptable.

Check the pins periodically for wear.

Refer to “Lift and Support The Machine” in Section 9 - Transport And Lifting Instructions for instructions and safety precautions.

CAUTION

- **Clean all fittings before disconnecting hoses.**
- **Tag hoses for proper reassembly.**
- **Plug all openings to prevent contamination.**
- **Replace any O-rings and inspect all hoses for crack and damage before reassembly.**

1. Raise and support the front end of machine.
2. Clean all hydraulic fittings, then tag all hoses for proper reassembly.
3. Disconnect all hydraulic hoses. Immediately plug all openings to prevent contamination.
4. Remove the spring pin and retaining pin holding the steer cylinder to the motor/hub housing.
5. Remove the spring pin and retaining pin holding the steer cylinder to the front axle.
6. Carefully lift off the steer cylinder.
7. Installation is reverse of removal.
8. To purge air from cylinder, cycle the steering system fully left and right 5-6 times.

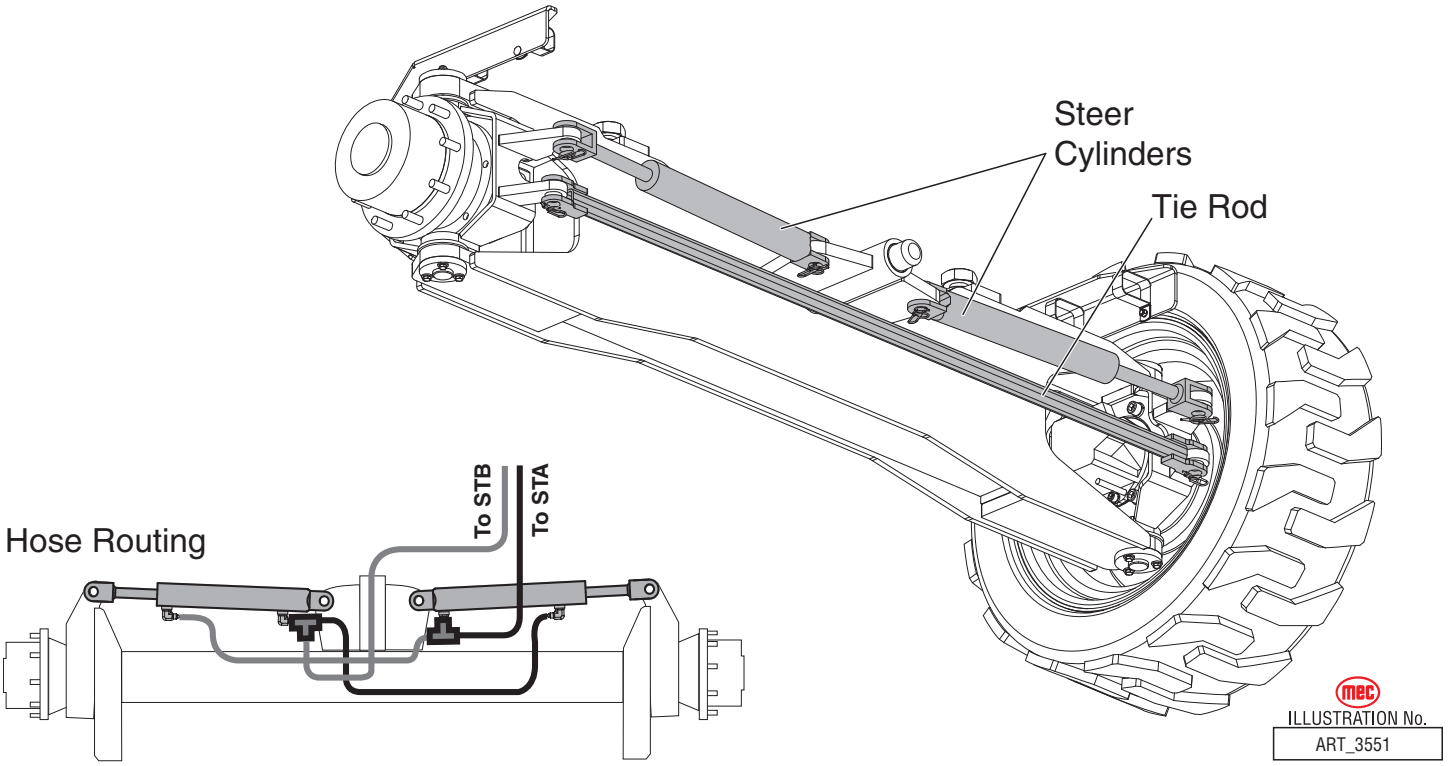

Axle Lock Cylinders

There are two Axle Lock Cylinders located at the rear axle of the machine.

Remove

1. Raise and support the rear end of machine.
2. Clean all hydraulic fittings, then tag all hoses for proper reassembly.
3. Disconnect all hydraulic hoses. Immediately plug all openings to prevent contamination.
4. Remove the bolt and banjo pin that secures the pivot pin to the chassis and remove the pivot pin.
5. Remove the bolt and banjo pin that secures the pivot pin to the floating axle. Support the cylinder, then remove the pivot pin.
6. Carefully remove the cylinder.
7. Installation is reverse of removal. Apply one (1) drop of Loctite® to the bolts that secure the banjo pins.

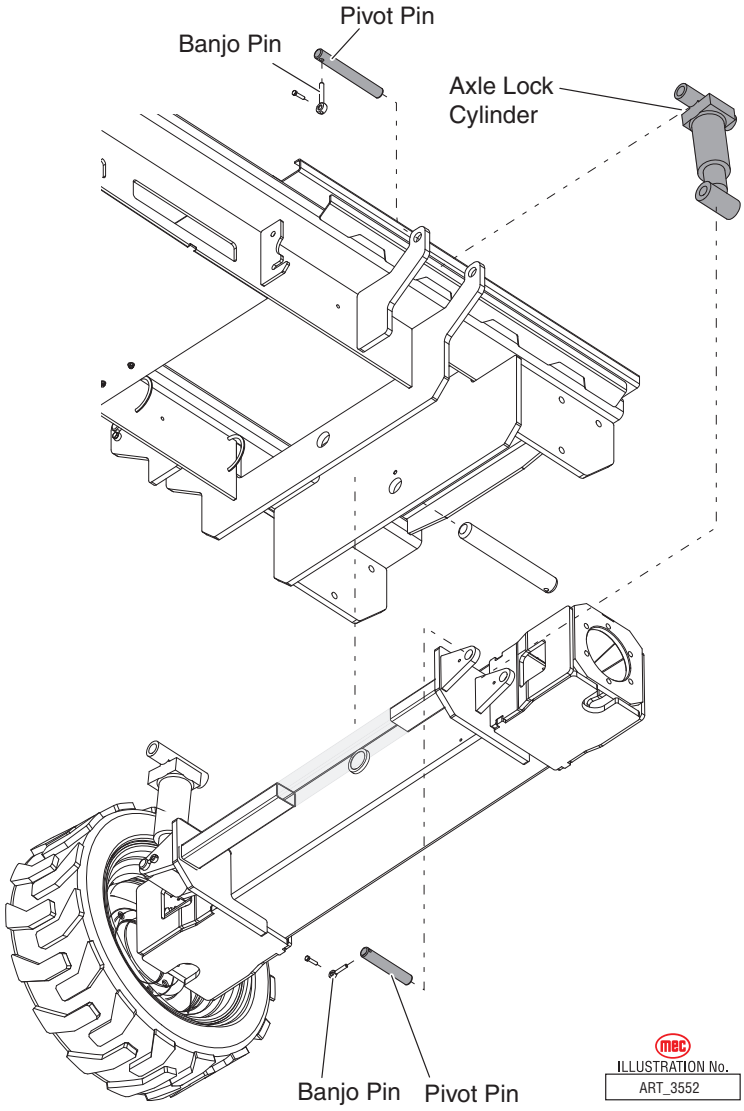

Bleed Procedure

1. Start engine.
2. Loosen the bleed screw located on the top rear side of the cylinder.
3. Watch as air escapes from valve.
4. Once a steady stream of fluid runs from the valve, tighten the valve.
5. Repeat on opposite side.

Test Locking And Center Position

1. Place a block approximately 4 inches (10 cm) high behind one of the rear tires.
2. Elevate the platform to 10-11 feet (3-3.4 m).
3. Slowly drive the tire onto the block.
   - The axle lock cylinders should be locked (no movement).
   - The opposite tire should be off the ground.
4. Lower the platform.
   - The axle lock cylinders should release.
   - The suspended tire should lower to the ground.

Outrigger Cylinders

There are four Outrigger Cylinders, each located at one of the corners of the machine.

Removal & Installation

1. Return the Outriggers to the stowed position.
2. Remove the outrigger housing cover.
3. Remove the outrigger housing.
4. Clean all hydraulic fittings, then tag all hoses for proper reassembly.
5. Disconnect all hydraulic hoses. Immediately plug all openings to prevent contamination.
6. Support the cylinder, then remove the bolts, washers and spacers that connect the cylinder to the chassis.
7. Carefully remove the cylinder using a suitable lifting device.
8. Installation is reverse of removal.

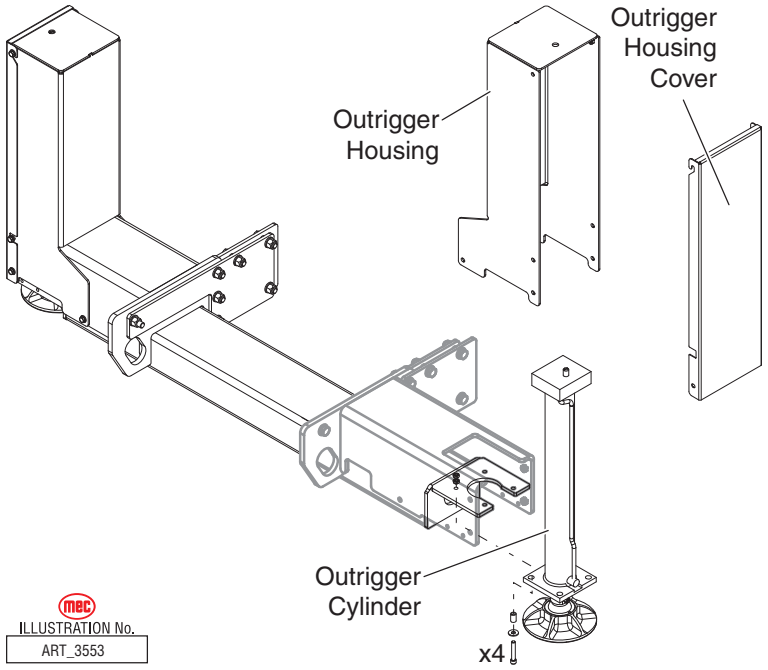

9. To purge air from the outrigger cylinders, lower the platform completely. Take the platform control box down from the platform so that it can be used from ground level.
10. Using the manual extend/retract switches, fully extend and retract all outrigger cylinders 5-6 times.

WARNING **KEEP FEET AWAY FROM OUTRIGGER PADS WHEN OPERATING THE OUTRIGGERS FROM GROUND LEVEL**

Outrigger Limit Switch Adjustment

Each Outrigger Cylinder is mounted using four sleeves that allow the cylinder to float. When the cylinders extend, the cylinder base flange slides up these sleeves and pushes against the outrigger weldment to stabilize the machine. This floating action causes the cylinder base to engage the Outrigger Limit Switch. These switches must be properly adjusted to ensure correct operation and to prevent damage to the switch.

The switch should be disengaged when the outrigger cylinder flange is separated from the outrigger weldment. The switch should be engaged when the outrigger cylinder flange is touching the outrigger weldment.

To adjust:

1. Remove the outrigger cover.
2. Loosen the limit switch adjustment screws.
3. Place a jack underneath the outrigger footpad. Lift the outrigger cylinder until the cylinder flange comes into solid contact with the outrigger weldment.
4. Slide the switch down until the switch just clicks, then move the switch down an additional 1/8 inch (3.2mm).
5. Hold the switch firmly in place, then tighten the adjustment screws.
6. Lower the jack and allow the outrigger cylinder to drop. You should hear the switch click as it disengages. If the switch does not disengage, repeat the adjustment procedure.

Repeat as needed on other outrigger cylinders.

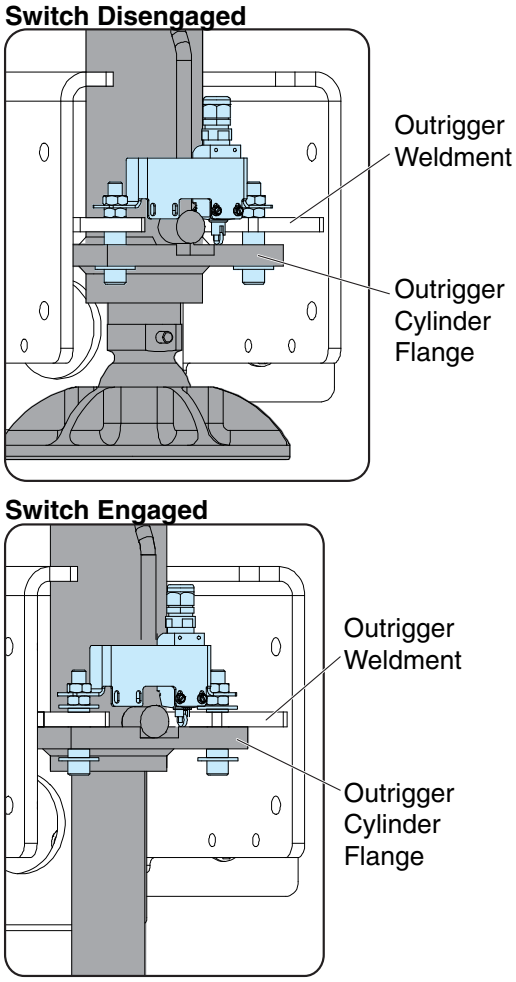

Platform Removal

1. Connect overhead crane or appropriate lifting device to the platform. Do not lift at this time.
2. Tag all cables that go to the platform for proper reassembly, then disconnect the cables.
3. Disconnect the centering linkage arms on each side of the machine.
4. Apply slight lifting pressure.
5. Remove the pin-retainer bolts from end pivot pins that connect the scissor linkage to the upper scissor slides, then use a slide hammer to remove the pivot pins.
6. Carefully lift the platform away from the scissor assembly.
7. Installation is reverse of removal.

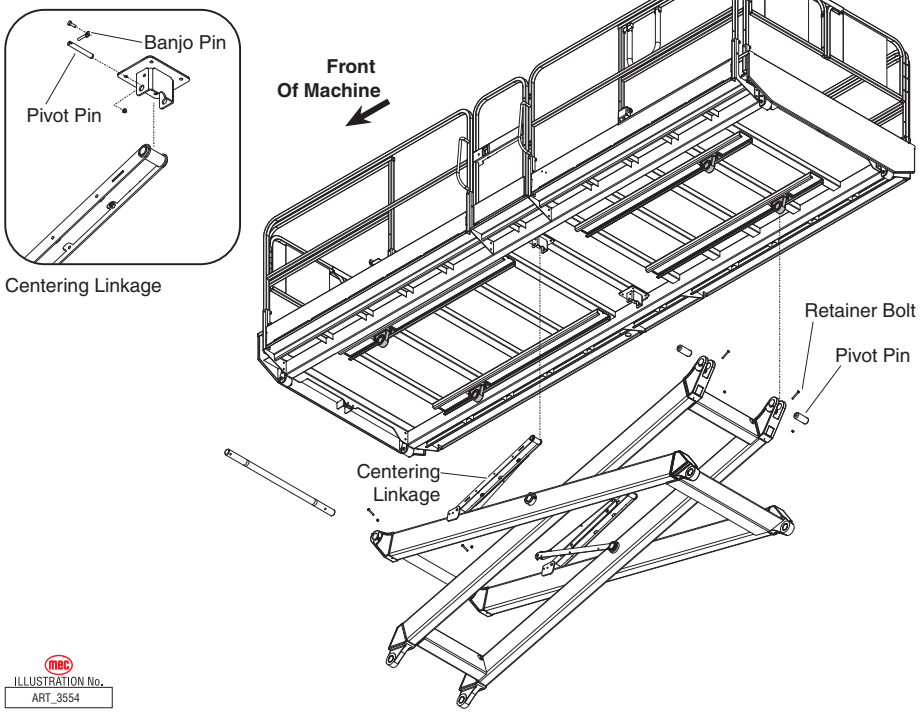

Scissor Linkage/Lift Cylinders

1. End Pivot Pins
2. Center Pivot Pins
3. Upper Centering Linkage
4. Rod-end pin of upper lift cylinder
5. Barrel-end pin of upper lift cylinder
6. Rod-end pin of lower lift cylinder
7. Cable/Hose Guides
8. Barrel-end pin of lower lift cylinder
9. Lower Centering Linkage

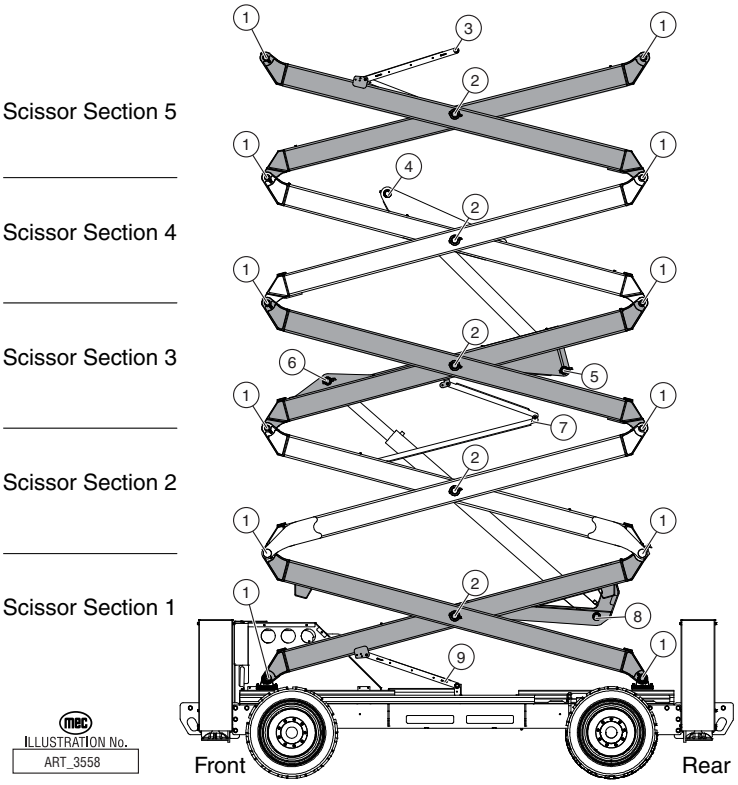

Scissor Linkage Disassembly/Lift Cylinder Removal

WARNING

THIS PROCESS REQUIRES SPECIFIC REPAIR SKILLS AND EXPERIENCE, APPROPRIATE LIFTING EQUIPMENT AND A PROPER WORKPLACE. DEATH, SERIOUS INJURY OR SIGNIFICANT MACHINE DAMAGE COULD OCCUR IF YOU ATTEMPT THIS PROCESS WITHOUT THE APPROPRIATE SKILLS AND EQUIPMENT.

CAUTION

- **Clean all fittings before disconnecting hoses.**
- **Tag hoses for proper reassembly.**
- **Plug all openings to prevent contamination.**
- **Replace any O-rings and inspect all hoses for crack and damage before reassembly.**

This procedure covers the disassembly of the scissor linkage and the removal of the lift cylinders.

Clean all hydraulic fittings before disassembly. Immediately plug all hydraulic hoses and components after disassembly. Tag all wiring and hoses for proper reassembly.

Replace all O-rings and inspect all hoses for cracks or damage before reassembly.

Refer to page 88.

1. Lower the platform completely.
2. Remove the platform. See “Platform Removal,” on page 87.

Scissor Section 5

3. Remove the platform cables from Scissor Section 5 and lay them out of the way inside the scissor linkage.
4. Secure both ends of Scissor Section 5 inner and outer links together with suitable straps.
5. Attach two lifting straps from an overhead crane to each end of the Scissor Section 5, using a total of four lifting straps. Go around both inner and outer scissor arms. Do not lift yet.
6. Remove the pin-retainer bolts from end pivot pins that connect Scissor Section 5 to the section below it, then use a slide hammer to remove the pins from each end of Scissor Section 5.

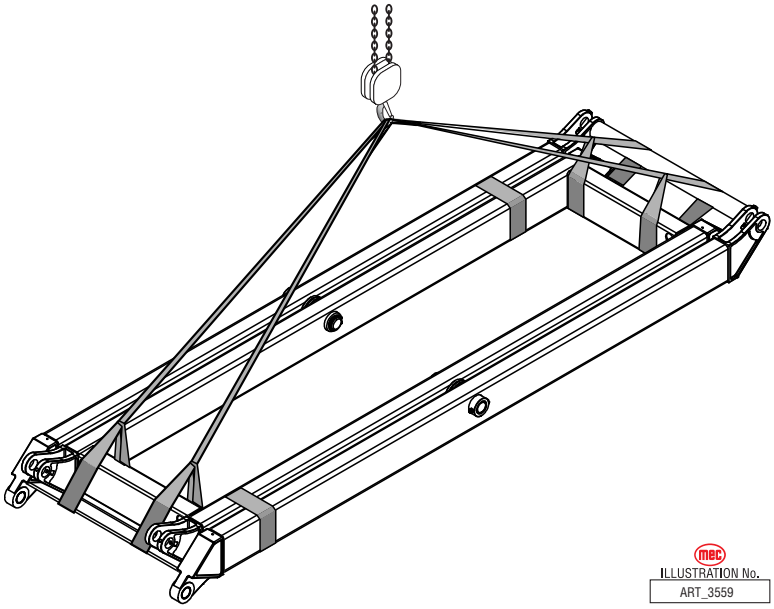

7. Carefully lift Scissor Section 5 away from the machine with the overhead crane.

WARNING **DURING REMOVAL, SCISSOR SECTIONS MAY SHIFT AND SWING OUT OF CONTROL IF NOT SUPPORTED PROPERLY BY THE OVERHEAD CRANE.**

Scissor Section 4

8. Remove the pin-retaining bolts from the rod-end pin of the Upper Lift Cylinder. Do not remove the pin.
9. Attach a lifting strap from the overhead crane to the upper end of the Upper Lift Cylinder barrel. Apply slight lifting pressure.

WARNING **THE UPPER LIFT CYLINDER COULD FALL WHEN THE PIN IS REMOVED IF IT IS NOT SUPPORTED PROPERLY.**

10. Remove the rod-end pin from the Upper Lift Cylinder using a soft metal drift.
11. Lower the Upper Lift Cylinder down until it contact the scissor section below it.
12. Remove the platform cables from Scissor Section 4 and lay them out of the way inside the scissor linkage.
13. Secure both ends of Scissor Section 4 inner and outer links together with suitable straps.
14. Attach two lifting straps from an overhead crane to each end of the Scissor Section 4, using a total of four lifting straps. Go around both inner and outer scissor arms. Do not lift yet.
15. Remove the pin-retainer bolts from end pivot pins that connect Scissor Section 4 to the section below it, then use a slide hammer to remove the pins from each end of Scissor Section 4.
16. Support the rod end of the Upper Lift Cylinder with a suitable lifting device.
17. Carefully lift Scissor Section 4 away from the machine with the overhead crane.

WARNING

DURING REMOVAL, SCISSOR SECTIONS MAY SHIFT AND SWING OUT OF CONTROL IF NOT SUPPORTED PROPERLY BY THE OVERHEAD CRANE.

THE UPPER LIFT CYLINDER MAY FALL IF NOT PROPERLY SUPPORTED WHEN SCISSOR SECTION 4 IS REMOVED.

18. Lower the rod end of the Upper Lift Cylinder onto the cross tube of Scissor Section 3 below it.

Scissor Section 3 & Upper Lift Cylinder

19. Clean, tag, disconnect and plug all hydraulic hoses going to the upper cylinder. Cap the fittings on the cylinder.

WARNING

PRESSURIZED OIL CAN BURN OR PENETRATE SKIN. LOOSEN THE HOSE CONNECTIONS SLOWLY TO ALLOW ANY OIL PRESSURE TO DISSIPATE GRADUALLY. DO NOT ALLOW THE OIL TO SQUIRT OR SPRAY.

20. Remove any attachments holding the hoses to the Upper Lift Cylinder.
21. Remove the pin-retaining bolts from the rod-end pin of the Lower Lift Cylinder. Do not remove the pin.
22. Attach a lifting strap from the overhead crane to the upper end of the Lower Lift Cylinder barrel. Apply slight lifting pressure.

WARNING

THE LOWER LIFT CYLINDER COULD FALL WHEN THE PIN IS REMOVED IF IT IS NOT SUPPORTED PROPERLY.

23. Remove the rod-end pin from the Lower Lift Cylinder using a soft metal drift.
24. Lower the Lower Lift Cylinder down until it contacts the engine cover below it.
25. Remove the cables and hydraulic hoses from the Scissor Section 3 and lay them out of the way inside the scissor linkage.
26. Remove the banjo pin retainers from the Cable/Hose Guide pivot pins at the Scissor Section 3 inner arm.
27. Remove the Cable/Hose Guide pivot pins. Lower the Cable/Hose Guides down.
28. Secure both ends of Scissor Section 3 with suitable straps. Secure the upper Lift Cylinder to Scissor Section 3.
29. Attach two lifting straps from an overhead crane to each end of the Scissor Section 3, using a total of four lifting straps. Go around both inner and outer scissor arms. Do not lift yet.
30. Remove the pin-retainer bolts from end pivot pins that connect Scissor Section 3 to the section below it, then use a slide hammer to remove the pins from each end of Scissor Section 3.
31. Support the rod end of the upper lift cylinder with a suitable lifting device.
32. Carefully lift Scissor Section 3 away from the machine with the overhead crane.

WARNING

DURING REMOVAL, SCISSOR SECTIONS MAY SHIFT AND SWING OUT OF CONTROL IF NOT SUPPORTED PROPERLY BY THE OVERHEAD CRANE.

33. Place a 6 x 6 x 32 inch (15 x 15 x 80 cm) wood block beneath the rear end of Scissor Section 3.
34. Lower the rear end of Scissor Section 3 onto the block. Lower the front end of Scissor Section 3 for the ground.
35. Attach lifting straps from the overhead crane to both ends of the upper lift cylinder. Apply slight lifting pressure.
36. Remove the pivot pin retaining bolts from the barrel-end pivot pin, then use a soft metal drift to remove the pivot pin.
37. Carefully remove the upper lift cylinder from the Scissor Section 3.

Lower Lift Cylinder

38. Secure the rear ends of Scissor Section 1 & Scissor Section 2 with suitable straps.
39. Attach a lifting strap from the overhead crane to the rear end of Scissor Section 1. Do not lift yet.
40. Remove the pin retaining bolts from the pivot pins that connect Scissor Section 1 to the scissor slides at the rear end of the machine, then use a slide hammer to remove the pivot pins from the scissor slides at the rear end of the machine.
41. Use the overhead crane to lift the rear end of the remaining scissor sections approximately 15 inches (40cm).
42. Place a 6 x 6 x 32 inch (15 x 15 x 80 cm) wood block beneath the barrel end of the lift cylinder and across both sides of the chassis.
43. Lower the rear end of the remaining scissor sections onto the block.

WARNING

KEEP HANDS CLEAR OF MOVING PARTS WHEN LOWERING SCISSOR ARMS

44. Attach lifting straps from the overhead crane to the lower lift cylinder. Apply slight lifting pressure.
45. Remove the pivot pin retaining bolts from the barrel-end pivot pin, then use a soft metal drift to remove the pivot pin.
46. Carefully remove the Lower Lift Cylinder from the machine.

Scissor Section 2

47. Use the overhead crane to lift the rear end of the remaining scissor sections 2 inches (5 cm), then remove the block.
48. Remove the straps holding Scissor Section 1 and Scissor Section 2 together.
49. Remove the Cable/Hose Guides.
50. Secure both ends of Scissor Section 2 with suitable straps.
51. Attach two lifting straps from an overhead crane to each end of the Scissor Section 2, using a total of four lifting straps. Go around both inner and outer scissor arms. Do not lift yet.
52. Remove the pin-retainer bolts from end pivot pins that connect Scissor Section 2 to the section below it, then use a slide hammer to remove the pins from each end of Scissor Section 2.
53. Carefully lift Scissor Section 2 away from the machine with the overhead crane.

WARNING

DURING REMOVAL, SCISSOR SECTIONS MAY SHIFT AND SWING OUT OF CONTROL IF NOT SUPPORTED PROPERLY BY THE OVERHEAD CRANE.

Scissor Section 1

54. Disconnect all cables and hoses from Scissor Section 1 and lay them out of the way inside the scissor linkage.
55. Secure both ends of Scissor Section 1 with suitable straps.
56. Attach two lifting straps from an overhead crane to each end of the Scissor Section 1, using a total of four lifting straps. Go around both inner and outer scissor arms. Do not lift yet.
57. Remove the pin-retainer bolts from end pivot pins that connect Scissor Section 1 to the scissor slides at the front of the machine, then use a slide hammer to remove the pins from each end of Scissor Section 1.
58. Carefully lift Scissor Section 1 away from the machine with the overhead crane.

WARNING

DURING REMOVAL, SCISSOR SECTIONS MAY SHIFT AND SWING OUT OF CONTROL IF NOT SUPPORTED PROPERLY BY THE OVERHEAD CRANE.

Installation is reverse of removal. Use Loctite® on all retaining bolts.

Lift cylinders are self-purging. Fully elevate and lower the scissor assembly 5-6 times to purge air from the cylinders.

Scissor Section Disassembly

WARNING

THIS PROCESS REQUIRES SPECIFIC REPAIR SKILLS AND EXPERIENCE, APPROPRIATE LIFTING EQUIPMENT AND A PROPER WORKPLACE.

DEATH, SERIOUS INJURY OR SIGNIFICANT MACHINE DAMAGE COULD OCCUR IF YOU ATTEMPT THIS PROCESS WITHOUT THE APPROPRIATE SKILLS AND EQUIPMENT.

1. Attach one lifting strap from an overhead crane to each end of the scissor section, using a total of two lifting straps. Attach the straps to the scissor ends that point upwards.
2. Raise the scissor arms approximately 18 inches (45 cm), then place a 12-inch (30 cm) block under the center of the scissor section and lower the scissor section onto it.

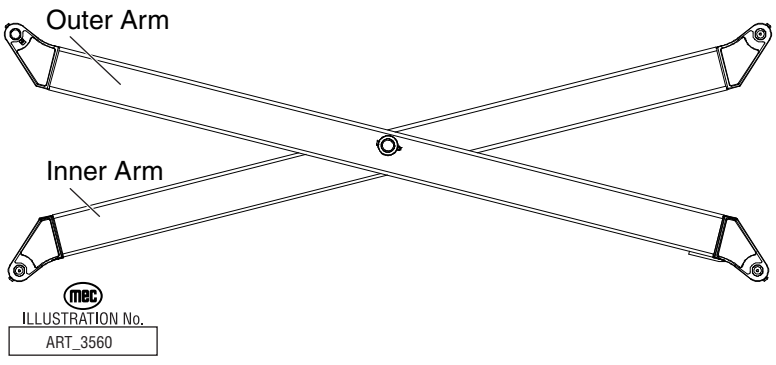

3. Remove the pin-retainer bolts from center pivot pins that connect scissor section arms, then use a slide hammer to remove the pivot pins.
4. Separate the scissor section arms carefully.

WARNING

SCISSOR SECTION ARMS MAY SHIFT AND MOVE OUT OF CONTROL IF NOT SUPPORTED PROPERLY BY THE OVERHEAD CRANE.

Engine Maintenance

For complete service information consult the engine manual that came with the machine.

CAUTION

Always wear protective eye-wear when working with fuel and oil.
Engine should be OFF when replacing filter elements.
Do not run the engine with the air filter element removed.

Oil And Oil Filter

Dispose of used oil and filters properly.

Use only oil with lubrication classifications CF, CF-4, CG-4, CH-4 and CI-4.

Oil used with this engine must have proper API and SAE Engine Oil classification according to ambient temperatures as shown below:

Above 77° F (25° C)	SAE30, SAE10W-30 or SAE15-40
32° ~ 77° F (0 ~ 25° C)	SAE20, SAE10W-30 or SAE15-40
Below 32° F (0° C)	SAE10W, SAE10W-30 or SAE15-40

1. Use a suitable container to catch drained oil. Remove the drain plug. After oil has drained, replace the drain plug.
2. Remove the old filter and wipe the filter seal contact surface with a clean towel.
3. Coat the seal on the new filter with clean oil, then install and tighten by hand.
4. Fill engine with 10w-30 motor oil until the dipstick indicates FULL. Capacity is 10 US quarts (9,5 l).
5. Recheck dipstick after running engine. Fill as necessary.

Air Filter Element

1. Clean the air filter canister before opening.
2. Remove the cap to the air filter canister.
3. Remove old filter and replace with a new filter.
4. Replace the cap to the air filter canister.

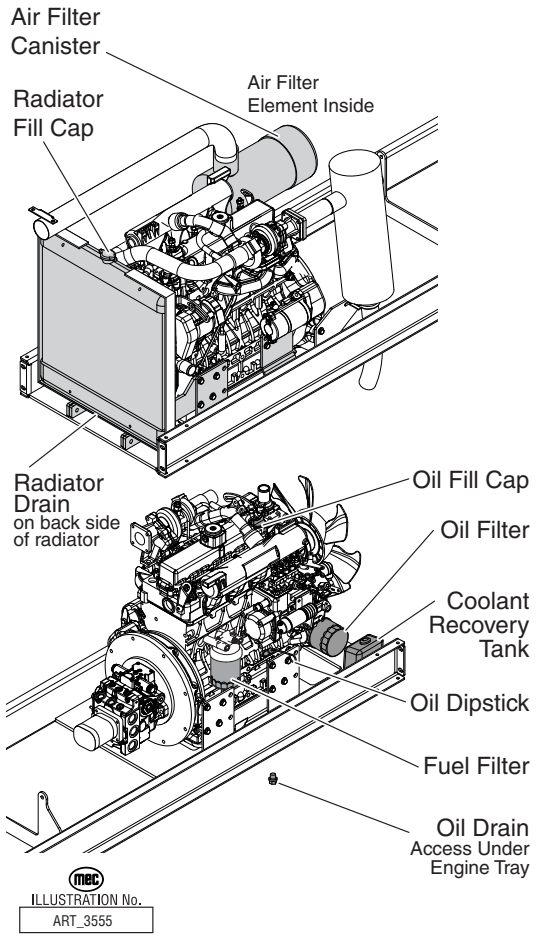

1. Turn OFF valve on bottom of fuel tank and clean the filter area before removing the filter.
2. Place a suitable container beneath the fuel filter assembly to catch spilled fuel.
3. Turn filter cartridge counterclockwise to remove. Wipe the filter seal contact surface with a clean towel
4. Coat the seal on the new filter with clean oil, then install and tighten by hand.
5. Open valve at fuel tank and check for leaks.
6. Purge the air from the fuel system as follows;
   - Fill fuel tank to the fullest extent. Open valve on bottom of fuel tank.
   - Loosen Fuel Filter Bleed Screw on top of fuel filter housing a few turns. Close the bleed screw when fuel flows steadily and there are no more bubbles.
   - Open the Fuel Injector Bleed Petcock on the fuel injector pump.
   - Crank the engine for about 10 seconds, then stop it, or move the fuel feed pump lever by hand.
   - Start the engine. Close the Fuel Injector Bleed Petcock when the engine idles smoothly.

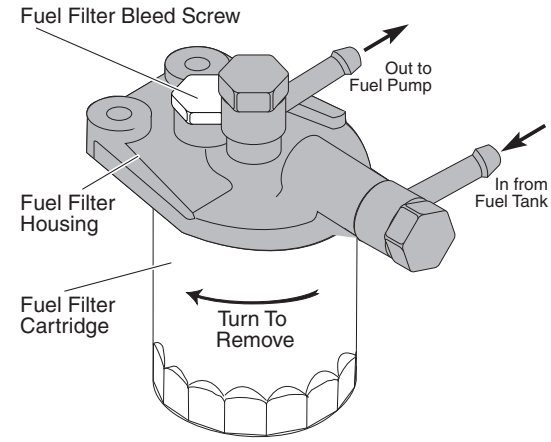

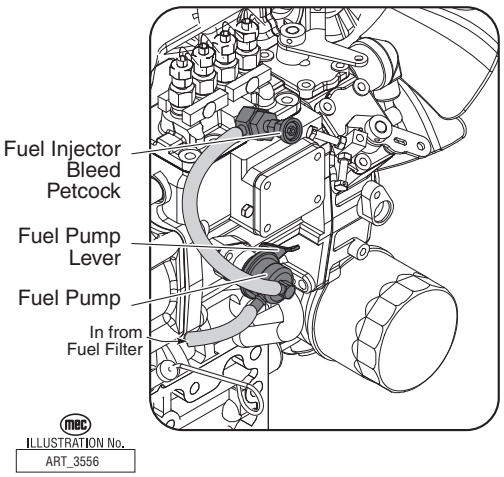

Note: The engine will crank for up to 10 seconds before the starter is cut out for a mandatory 30-second starter cooldown cycle. A red light will illuminate on the Base Control Station during the cool-down cycle.

Throttle Adjustment

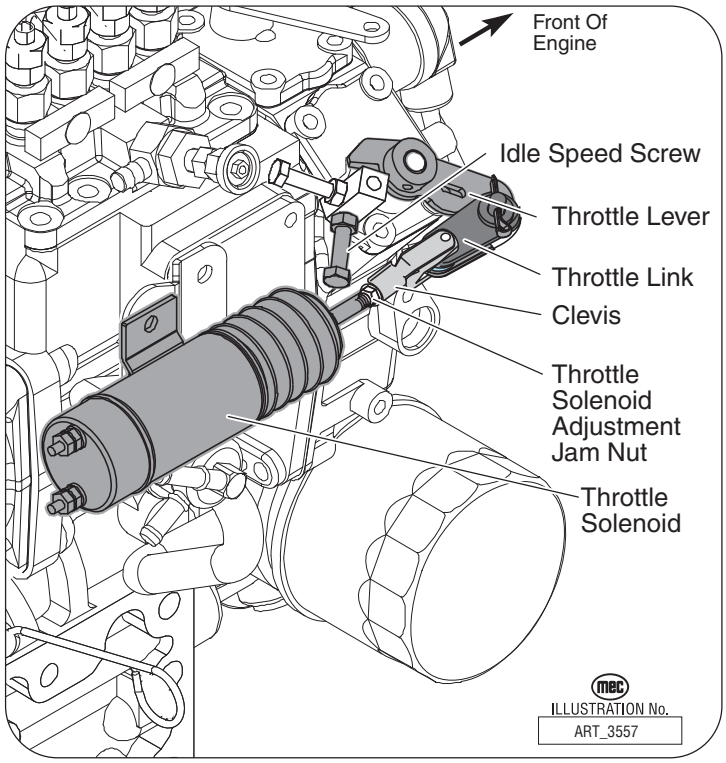

Idle Speed Adjustment

1. Bring engine to operating temperature.
2. Slow engine to complete idle.
3. Adjust the Idle Speed Screw until the RPM is 950. Adjust slightly up or down to avoid vibrations.
4. Hold the Idle Speed Screw while tightening the jam nut to prevent change in adjustment.

High Speed Adjustment

IMPORTANT: In order to prevent electrical system damage, check the Throttle Solenoid Adjustment after this procedure.

1. Bring engine to operating temperature.
2. Disconnect the Throttle Solenoid linkage at the clevis.
3. Manually pull the Throttle Lever until it contacts the High Speed Screw.
4. Adjust the High Speed Screw until the RPM is 3000 with the Throttle Lever against the High Speed Screw.
5. Hold the High Speed Stop Screw while tightening the jam nut to prevent change in adjustment.
6. Turn off the engine and reconnect the Throttle Solenoid linkage at the clevis.

Throttle Solenoid Adjustment

IMPORTANT: This final adjustment must be made after all other throttle speed adjustments. The solenoid must be free to retract fully in order to turn OFF the High Amperage Pull Circuit. Improper adjustment will result in solenoid failure and may damage the electrical system.

1. With the engine OFF, manually retract the solenoid by grasping the piston, just ahead of the boot, and pull to the fully retracted position.

Note: The solenoid must retract and extend smoothly. If movement is impaired it may be necessary to reposition the solenoid to improvement alignment.

2. With the solenoid piston fully retracted measure the distance between the High Speed Stop Screw and the Throttle linkage using a .020 inch (.5 mm) feeler gauge.
3. Adjust clearance at the Throttle Solenoid linkage only. Do not adjust the High Speed Stop Screw.
   - Disconnect the linkage at the clevis and turn the clevis to lengthen or shorten as necessary.
   - Reconnect the clevis and measure again. Repeat until the measurement is correct.

General Troubleshooting Tips

Hydraulic Fluid Pump

The Hydraulic Drive Pump used in this model is a Variable Displacement, Axial Piston type pump. Proper adjustment is critical for normal operation of the machine. Refer to “Never use a vehicle in factory override; this state is ONLY intended for use during manufacture! While factory override is active, the LED is rapidly flashed on/off.” on page 123.

The Functions/Lift pump is a fixed-displacement gear-type pump attached to the rear of the Drive Pump.

Common Causes of Electrical System Malfunctions:

- Battery switch is turned OFF (located to the left of lower controls).
- Battery connections are loose or corroded
- Battery is not fully charged.
- Emergency Stop buttons are pushed (OFF position).
- Circuit breaker is tripped (OFF position).

Common Causes of Hydraulic System Malfunctions:

- Hydraulic fluid level is too low.
- Incompatible hydraulic fluids mixed, destroying the additives and causing varnish build up, resulting in the valves sticking.
- Water in the hydraulic fluid due to a damp climate.
- Improper hydraulic fluid used. Viscosity too high in cold climates. Viscosity too low in warm climates.
- Hydraulic fluid contaminated with debris - filter change interval neglected.

Note: MEC uses a multiple viscosity fluid that is light enough for cold climates and resists thinning in warm climates. Use only the recommended hydraulic fluid. Substituting with a lower grade fluid will result in pump and drive motor failure. Refer to Section 5 - Maintenance Lock.

Note: Contamination always causes failure in any hydraulic system. It is very important to be careful not to introduce any contamination into hydraulic system during the assembly procedures. Please make sure all ports and cavities of the manifold and cylinders are properly covered/ plugged during maintenance activities.

Electrical System Troubleshooting

The electronic control system used on this machine was designed for low maintenance and long, trouble-free operation. The system consists of two microprocessor based modules: the Matrix Module and the GP400 Processor. They communicate through a low voltage digital signal called CAN-Bus communication.

To protect against part failure or incorrect plug connections, the modules are fully short circuit and reverse polarity protected. All electrical plug connections are waterproof to promote longer trouble free operation and to increase terminal life.

NEVER ATTEMPT TO SUPPLY BATTERY POWER, OR VOLTAGE HIGHER THAN 12 VOLTS TO ANY PART OR MODULE IN THIS SYSTEM, AS CATASTROPHIC FAILURE OF THE MODULES MAY RESULT.



USE OF HIGH PRESSURE WASHING EQUIPMENT DIRECTLY ON THE MODULES CAN FORCE WATER INTO SEALED CONNECTION AND CAN CAUSE A TEMPORARY SYSTEM SHUT-DOWN. HIGH PRESSURE WASHING WITHIN THE VICINITY OF THE MODULES IS HIGHLY DISCOURAGED.

GP400 Module

The GP400 module is “the brains” of the system. It receives and processes a variety of inputs both from the machine and the operator, then controls all the operative functions of the machine. It also has a feature that allows the technician to access and monitor all functionality of the system, along with a technician-friendly series of fault messages that can be accessed through the use of the EZ-Cal scan tool. Flash codes are also provided in case an EZ-Cal scan tool is not available.

Such information can be used for preventative maintenance and troubleshooting should a problem arise. A comprehensive list of EZ-Cal accessible information can be found later in this section.

The GP400 operates on 12 volts DC and should never be probed or operated with voltage higher than 14 volts DC

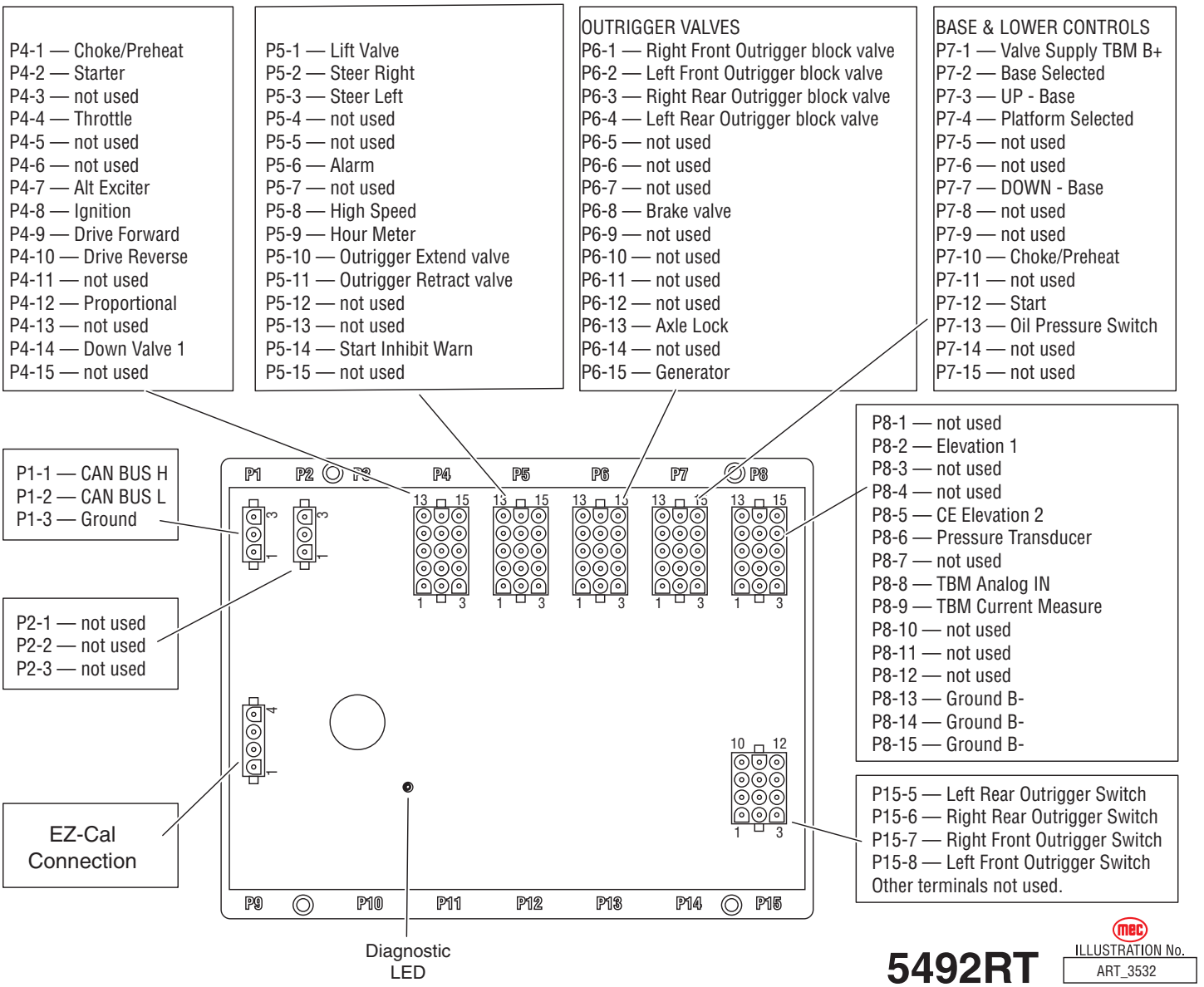

P4-1 — Choke/Preheat
P4-2 — Starter
P4-3 — not used
P4-4 — Throttle
P4-5 — not used
P4-6 — not used
P4-7 — Alt Exciter
P4-8 — Ignition
P4-9 — not used
P4-10 — not used
P4-11 — not used
P4-12 — not used
P4-13 — not used
P4-14 — Down Valve 1
P4-15 — not used

P5-1 — Lift Valve
P5-2 — Steer Right
P5-3 — Steer Left
P5-4 — not used
P5-5 — not used
P5-6 — Alarm
P5-7 — not used
P5-8 — High Speed
P5-9 — Hour Meter
P5-10 — Outrigger Extend valve
P5-11 — Outrigger Retract valve
P5-12 — not used
P5-13 — not used
P5-14 — Start Inhibit Warn
P5-15 — not used

OUTRIGGER VALVES
P6-1 — Right Front Outrigger block valve
P6-2 — Left Front Outrigger block valve
P6-3 — Right Rear Outrigger block valve
P6-4 — Left Rear Outrigger block valve
P6-5 — not used
P6-6 — not used
P6-7 — not used
P6-8 — Brake valve
P6-9 — not used
P6-10 — not used
P6-11 — not used
P6-12 — not used
P6-13 — Axle Lock
P6-14 — not used
P6-15 — Generator

BASE & LOWER CONTROLS
P7-1 — Valve Supply TBM B+
P7-2 — Base Selected
P7-3 — UP - Base
P7-4 — Platform Selected
P7-5 — not used
P7-6 — not used
P7-7 — DOWN - Base
P7-8 — not used
P7-9 — not used
P7-10 — Choke/Preheat
P7-11 — not used
P7-12 — Start Switch
P7-13 — Oil Pressure Switch
P7-14 — not used
P7-15 — not used

P1-1 — CAN BUS HI
P1-2 — CAN BUS LO
P1-3 — Ground

P2-1 — CAN BUS HI
P2-2 — CAN BUS LO
P2-3 — Ground

EZ-Cal Connection

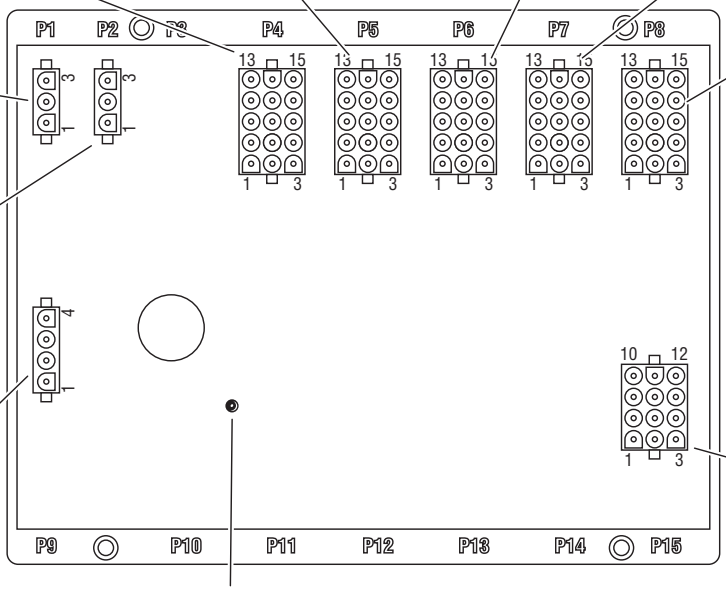

P8-1 — not used
P8-2 — Elevation Transducer
P8-3 — not used
P8-4 — not used
P8-5 — CE Elevation 2
P8-6 — Pressure Transducer
P8-7 — not used
P8-8 — not used
P8-9 — TBM Analog IN
P8-10 — not used
P8-11 — not used
P8-12 — not used
P8-13 — Ground B-
P8-14 — Ground B-
P8-15 — Ground B-

P15-5 — Left Rear Outrigger Switch
P15-6 — Right Rear Outrigger Switch
P15-7 — Right Front Outrigger Switch
P15-8 — Left Front Outrigger Switch
Other terminals not used.

6092RT, 3392RT-T

ILLUSTRATION No.
ART_4812

Matrix Module

The Matrix Module is the remote module located inside the upper control box. It received inputs from the operator and relays them to the GP400.

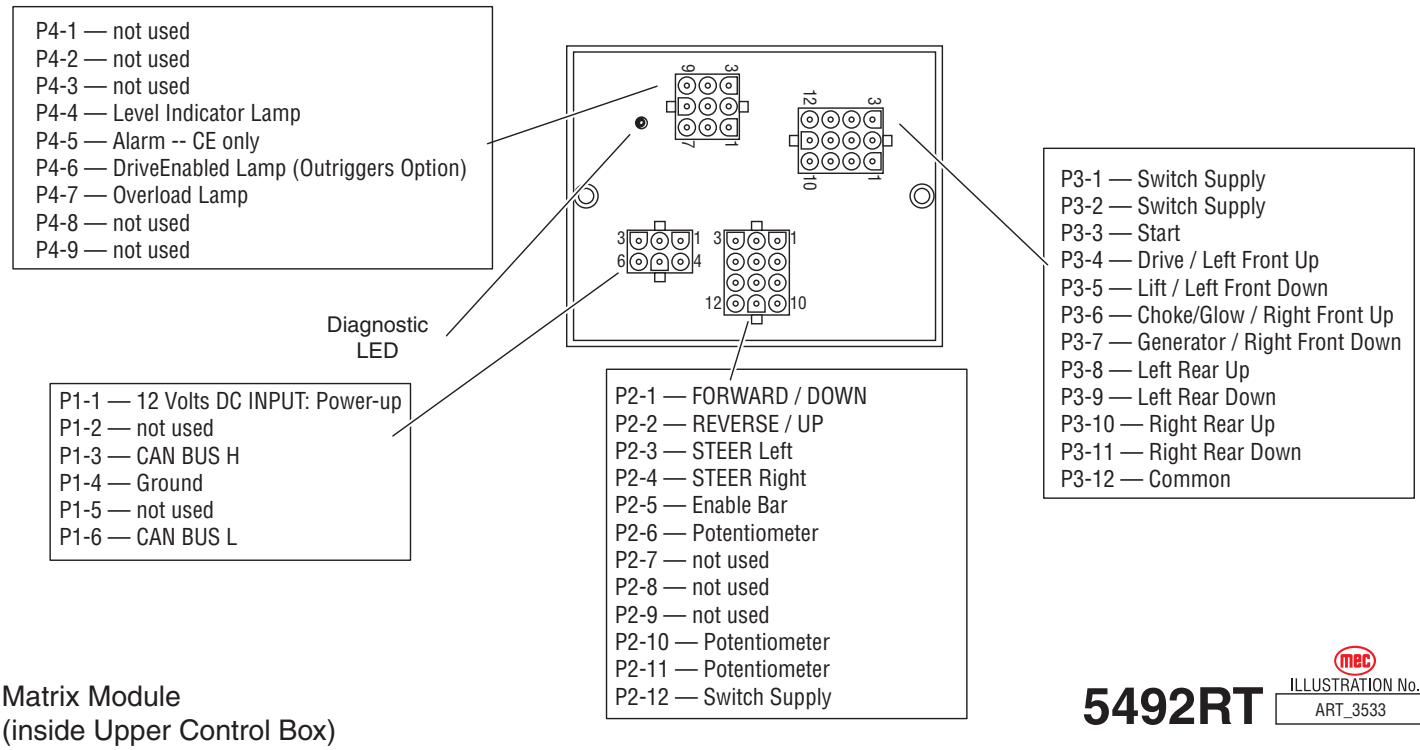

Matrix Module
(inside Upper Control Box)

5492RT

ILLUSTRATION No.
ART_3533

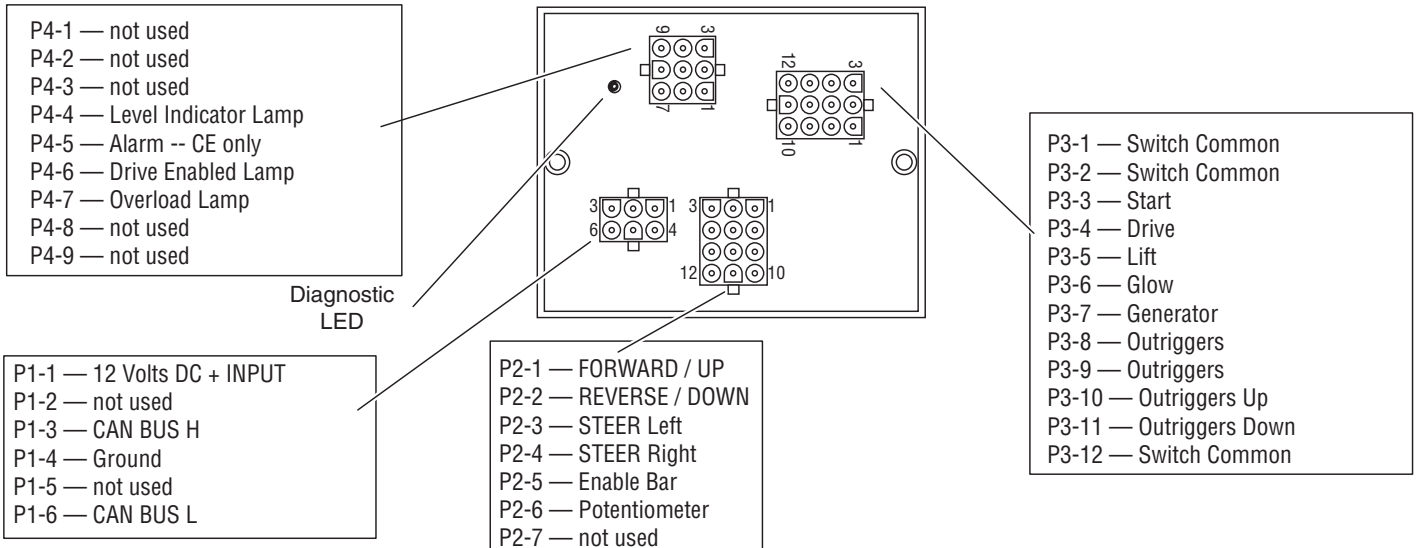

Matrix Module
(inside Upper Control Box)

6092RT, 3392RT-T

ILLUSTRATION No.
ART_4813

Valve Constant Current Modules And Terminal Block Module

Valve Constant Current Modules (VCCM)

The Valve Constant Current Module is an auxiliary module located inside the lower control box of 6092RT and 3392RT-T models. This module controls the proportional drive functions of the machine.

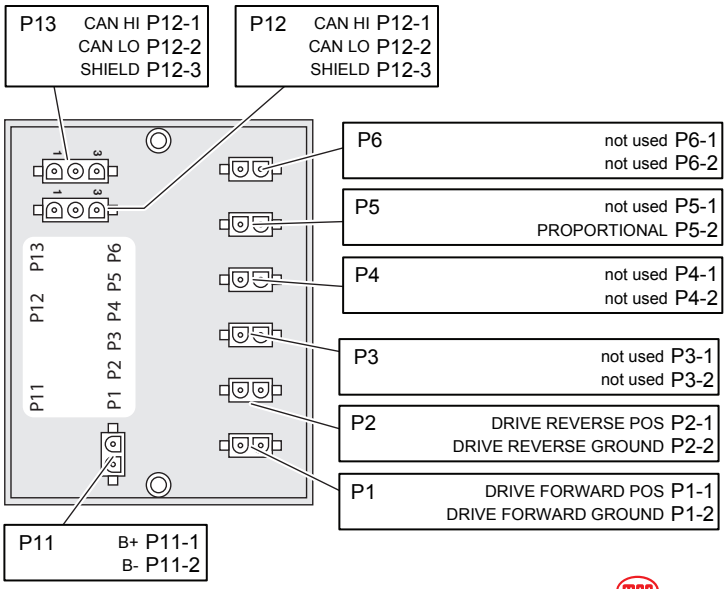

6092RT, 3392RT-T
Located inside the Lower Control Box

ILLUSTRATION No.
ART_4814

Terminal Block Module (TBM)

There is a module inside the lower control box called a TBM (Terminal Block Module) that provides terminal point connections for both positive and ground circuits. A signal from the Emergency Stop circuit activates a load-reduction relay within the TBM that provides ample power to the B+ (positive) terminal strip. This arrangement protects the system against voltage drop conditions that can be detrimental to the electrical system.

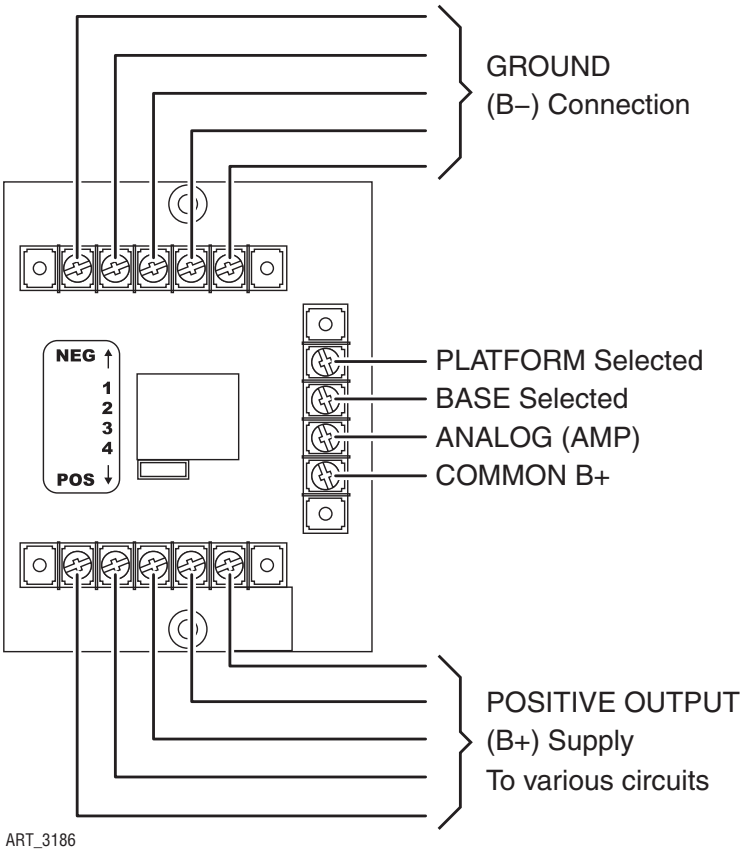

EZ-Cal Scan Tool

The EZ-Cal (MEC part # 90888; not part of the machine) is a hand-held scan tool that interfaces with the system to provide various information and adjustments. The EZ-Cal receives its power from the GP400 when connected. The system must be powered up by closing the Battery disconnect switch and pulling out both emergency stop switches. You must also select Base or Platform depending on the station you will operate from.

Using The EZ-Cal Scan Tool

To operate the EZ-Cal, plug the cable into the 4-terminal receptacle P9 on the GP400 and power the system up.

- The EZ-Cal display will illuminate and read “HELP: PRESS ENTER”. From this point, use the right and left arrows to scroll through the base menus.
- Once the desired base menu is obtained (i.e. ADJUSTMENTS) press Enter to access sub menus.
- Use the right and left arrows to scroll through sub menus, press Enter again.
- The up/down arrows are used to change settings only.
- Press ESC to back up one level.

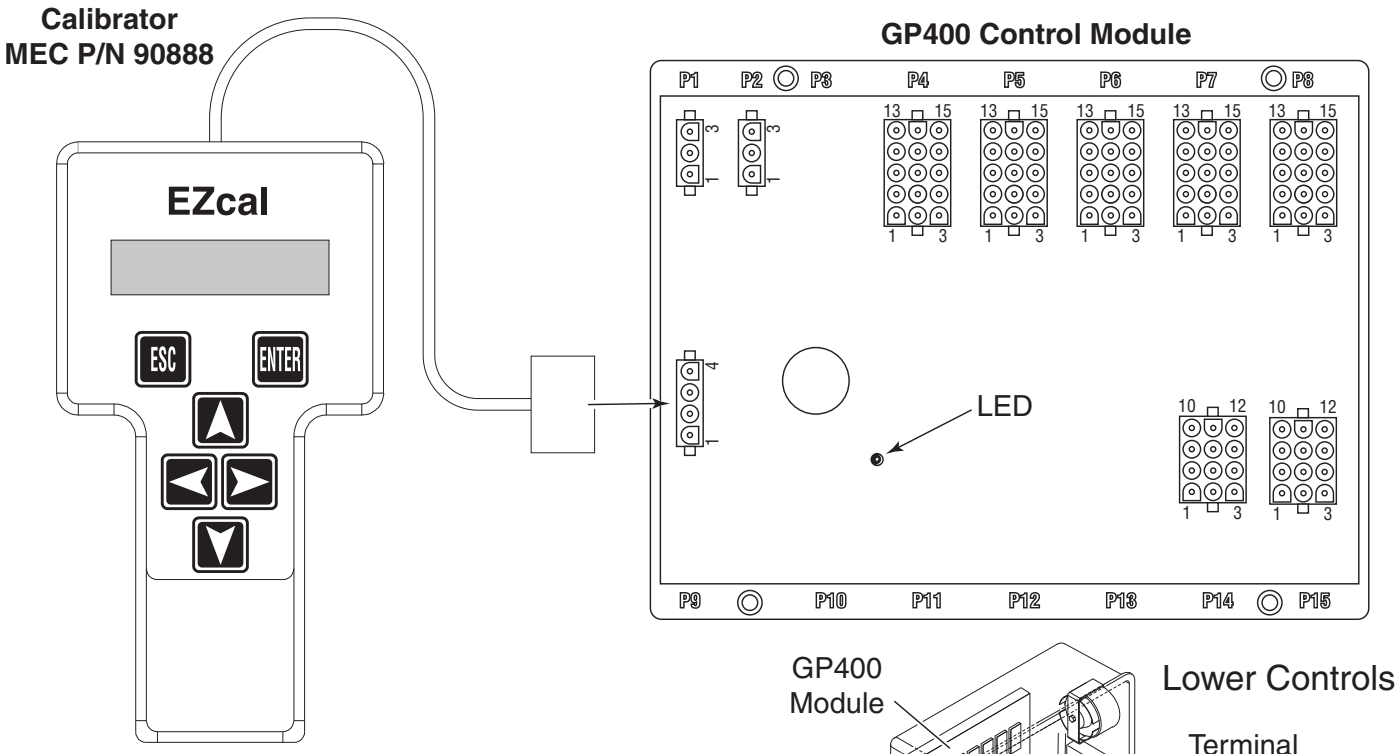

SYMBOL	KEY FUNCTIONS
ESC ENTER	**ESC/ENTER BUTTONS** To move back and forth between menu and sub-menu
◀ ▶	**LEFT/RIGHT BUTTONS** Select menus and setting to be adjusted
▲ ▼	**UP/DOWN BUTTONS** Adjust setting values

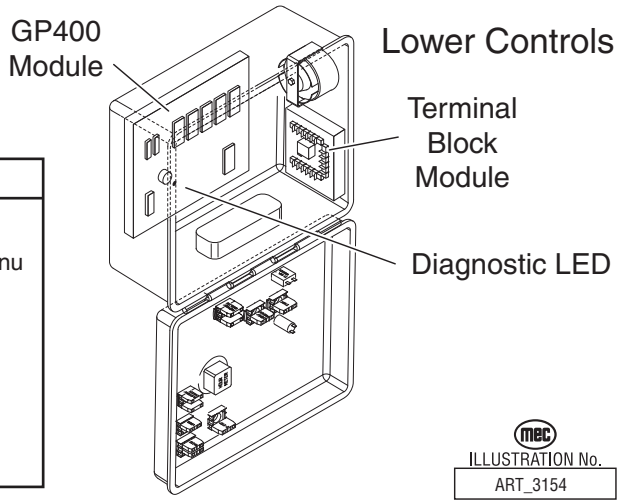

ILLUSTRATION No.
ART_3154

Adjustments, Setup & Diagnostics Flowcharts

Using The EZ-Cal With The Flow Charts

Use the EZ-Cal Flow Charts as a guide to locate diagnostic information and make adjustments. Each box in the flow chart will have 3 bits of information.

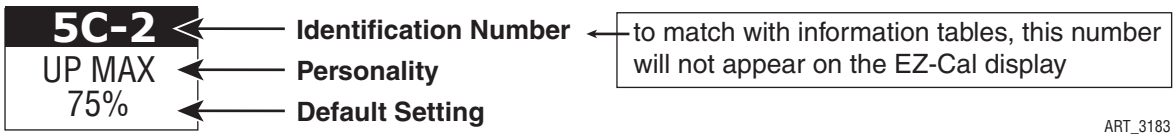

The IDENTIFIER (5c2): Used to locate this specific personality in the informational charts. Here you can obtain specific information on the individual personalities.

The PERSONALITY (Up Max): Identifies the individual personalities.

The DEFAULT SETTING: The factory setting. If adjustments are made, they must be returned to default setting.

WARNING

ACCESS LEVEL 1 PROVIDES ACCESS TO CHANGE PERSONALITIES NORMALLY PRESET AT THE FACTORY TO PROVIDE PROPER MACHINE MOVEMENT AT SAFE SPEEDS. PERSONALITIES MUST NOT BE CHANGED WITHOUT PRIOR AUTHORIZATION FROM MEC AND MAY ONLY BE RETURNED TO FACTORY SPECIFICATION AS LISTED IN THE FOLLOWING TABLES.

Error Messages

To obtain error messages from the EZ-Cal Connect the EZ-Cal as mentioned above. The display will read, “HELP:PRESS ENTER”. Press Enter to display the current error message. Use the following list of error messages to better understand the fault.

Pressing Enter twice will provide a scrolling message of the current error followed by a log of previous errors that may have occurred within recent operation.

Flash Codes

Flash Codes, provided from the GP400 red LED, will also assist in the event an EZ-Cal is not available. However, the EZ-Cal yields considerably more relevant information. Refer to “EZ-Cal HELP Messages” on page 118 for flash coded error messages.

Adjustments & Setup Flow Charts

Following are the Adjustments & Setup flow charts for the machine models covered by this manual.

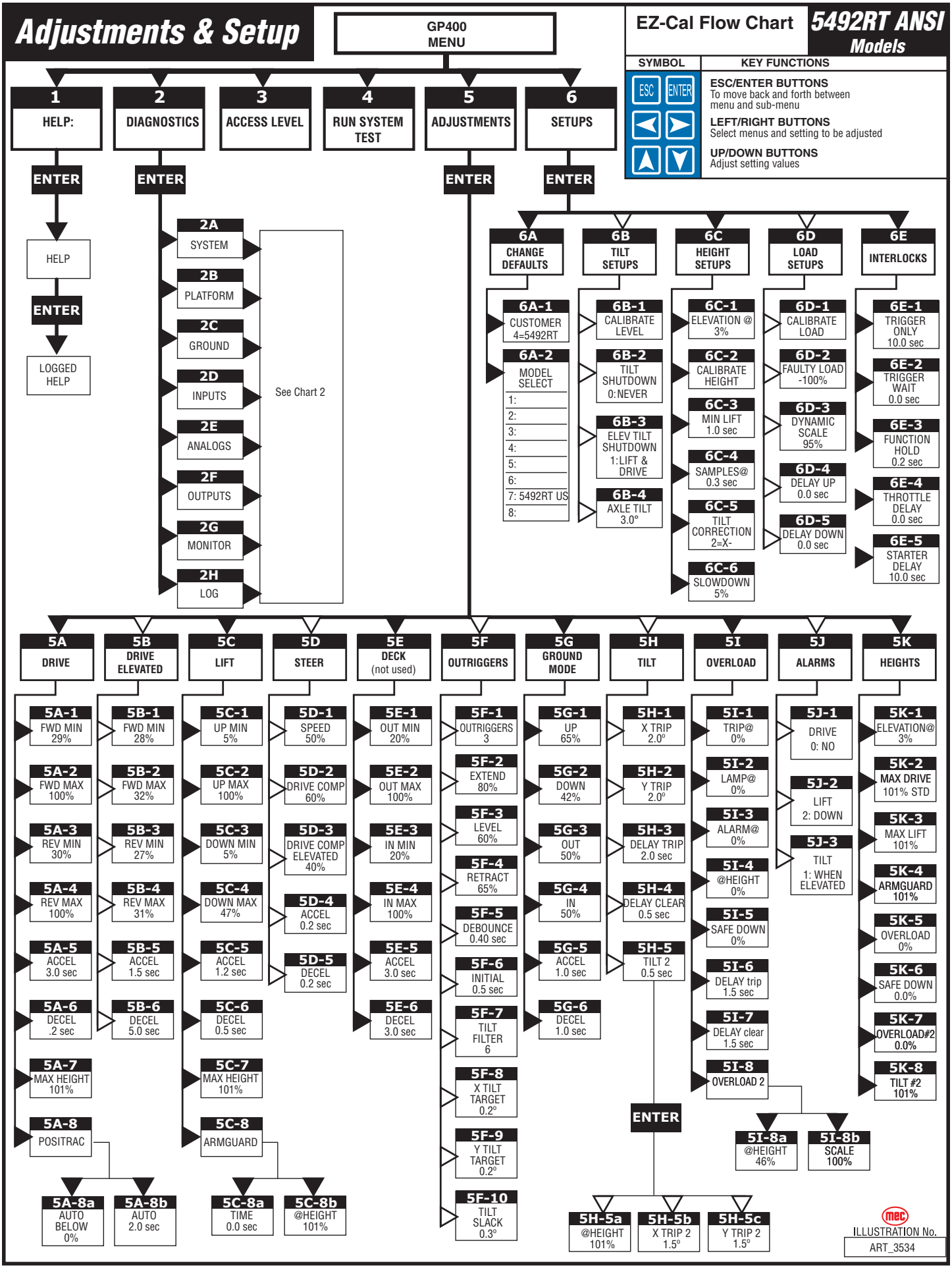
Adjustments & Setup
GP400 MENU
EZ-Cal Flow Chart
5492RT ANSI Models
SYMBOL
KEY FUNCTIONS
ESC/ENTER BUTTONS
To move back and forth between menu and sub-menu
LEFT/RIGHT BUTTONS
Select menus and setting to be adjusted
UP/DOWN BUTTONS
Adjust setting values
1 HELP:
2 DIAGNOSTICS
3 ACCESS LEVEL
4 RUN SYSTEM TEST
5 ADJUSTMENTS
6 SETUPS
ENTER
HELP
LOGGED HELP
2A SYSTEM
2B PLATFORM
2C GROUND
2D INPUTS
2E ANALOGS
2F OUTPUTS
2G MONITOR
2H LOG
See Chart 2
6A CHANGE DEFAULTS
6A-1 CUSTOMER 4=5492RT
6A-2 MODEL SELECT
1:
2:
3:
4:
5:
6:
7: 5492RT US
8:
6B TILT SETUPS
6B-1 CALIBRATE LEVEL
6B-2 TILT SHUTDOWN 0: NEVER
6B-3 ELEV TILT SHUTDOWN 1: LIFT & DRIVE
6B-4 AXLE TILT 3.0°
6C HEIGHT SETUPS
6C-1 ELEVATION @ 3%
6C-2 CALIBRATE HEIGHT
6C-3 MIN LIFT 1.0 sec
6C-4 SAMPLES@ 0.3 sec
6C-5 TILT CORRECTION 2=X-
6C-6 SLOWDOWN 5%
6D LOAD SETUPS
6D-1 CALIBRATE LOAD
6D-2 FAULTY LOAD -100%
6D-3 DYNAMIC SCALE 95%
6D-4 DELAY UP 0.0 sec
6D-5 DELAY DOWN 0.0 sec
6E INTERLOCKS
6E-1 TRIGGER ONLY 10.0 sec
6E-2 TRIGGER WAIT 0.0 sec
6E-3 FUNCTION HOLD 0.2 sec
6E-4 THROTTLE DELAY 0.0 sec
6E-5 STARTER DELAY 10.0 sec
5A DRIVE
5A-1 FWD MIN 29%
5A-2 FWD MAX 100%
5A-3 REV MIN 30%
5A-4 REV MAX 100%
5A-5 ACCEL 3.0 sec
5A-6 DECEL .2 sec
5A-7 MAX HEIGHT 101%
5A-8 POSITRAC
5A-8a AUTO BELOW 0%
5A-8b AUTO 2.0 sec
5B DRIVE ELEVATED
5B-1 FWD MIN 28%
5B-2 FWD MAX 32%
5B-3 REV MIN 27%
5B-4 REV MAX 31%
5B-5 ACCEL 1.5 sec
5B-6 DECEL 5.0 sec
5C LIFT
5C-1 UP MIN 5%
5C-2 UP MAX 100%
5C-3 DOWN MIN 5%
5C-4 DOWN MAX 47%
5C-5 ACCEL 1.2 sec
5C-6 DECEL 0.5 sec
5C-7 MAX HEIGHT 101%
5C-8 ARMGUARD
5C-8a TIME 0.0 sec
5C-8b @HEIGHT 101%
5D STEER
5D-1 SPEED 50%
5D-2 DRIVE COMP 60%
5D-3 DRIVE COMP ELEVATED 40%
5D-4 ACCEL 0.2 sec
5D-5 DECEL 0.2 sec
5E DECK (not used)
5E-1 OUT MIN 20%
5E-2 OUT MAX 100%
5E-3 IN MIN 20%
5E-4 IN MAX 100%
5E-5 ACCEL 3.0 sec
5E-6 DECEL 3.0 sec
5F OUTRIGGERS
5F-1 OUTRIGGERS 3
5F-2 EXTEND 80%
5F-3 LEVEL 60%
5F-4 RETRACT 65%
5F-5 DEBOUNCE 0.40 sec
5F-6 INITIAL 0.5 sec
5F-7 TILT FILTER 6
5F-8 X TILT TARGET 0.2°
5F-9 Y TILT TARGET 0.2°
5F-10 TILT SLACK 0.3°
5G GROUND MODE
5G-1 UP 65%
5G-2 DOWN 42%
5G-3 OUT 50%
5G-4 IN 50%
5G-5 ACCEL 1.0 sec
5G-6 DECEL 1.0 sec
5H TILT
5H-1 X TRIP 2.0°
5H-2 Y TRIP 2.0°
5H-3 DELAY TRIP 2.0 sec
5H-4 DELAY CLEAR 0.5 sec
5H-5 TILT 2 0.5 sec
ENTER
5H-5a @HEIGHT 101%
5H-5b X TRIP 2 1.5°
5H-5c Y TRIP 2 1.5°
5I OVERLOAD
5I-1 TRIP@ 0%
5I-2 LAMP@ 0%
5I-3 ALARM@ 0%
5I-4 @HEIGHT 0%
5I-5 SAFE DOWN 0%
5I-6 DELAY trip 1.5 sec
5I-7 DELAY clear 1.5 sec
5I-8 OVERLOAD 2
5I-8a @HEIGHT 46%
5I-8b SCALE 100%
5J ALARMS
5J-1 DRIVE 0: NO
5J-2 LIFT 2: DOWN
5J-3 TILT 1: WHEN ELEVATED
5K HEIGHTS
5K-1 ELEVATION@ 3%
5K-2 MAX DRIVE 101% STD
5K-3 MAX LIFT 101%
5K-4 ARMGUARD 101%
5K-5 OVERLOAD 0%
5K-6 SAFE DOWN 0.0%
5K-7 OVERLOAD#2 0.0%
5K-8 TILT #2 101%
ILLUSTRATION No.
ART_3534

Adjustments & Setup

GP400 MENU

EZ-Cal Flow Chart

5492RT Optional Load Sensing System

SYMBOL	KEY FUNCTIONS
ESC ENTER	**ESC/ENTER BUTTONS** To move back and forth between menu and sub-menu
	LEFT/RIGHT BUTTONS Select menus and setting to be adjusted
	UP/DOWN BUTTONS Adjust setting values

- 1 HELP:
  - ENTER
    - HELP
    - ENTER
    - LOGGED HELP
- 2 DIAGNOSTICS
  - ENTER
    - 2A SYSTEM
    - 2B PLATFORM
    - 2C GROUND
    - 2D INPUTS
    - 2E ANALOGS
    - 2F OUTPUTS
    - 2G MONITOR
    - 2H LOG
    - See Chart 2
- 3 ACCESS LEVEL
- 4 RUN SYSTEM TEST
- 5 ADJUSTMENTS
  - ENTER
    - 5A DRIVE
      - 5A-1 FWD MIN 29%
      - 5A-2 FWD MAX 50%
      - 5A-3 REV MIN 30%
      - 5A-4 REV MAX 50%
      - 5A-5 ACCEL 3.0 sec
      - 5A-6 DECEL .2 sec
      - 5A-7 MAX HEIGHT 101%
      - 5A-8 POSITRAC
        - 5A-8a AUTO BELOW 0%
        - 5A-8b AUTO 2.0 sec
    - 5B DRIVE ELEVATED
      - 5B-1 FWD MIN 29%
      - 5B-2 FWD MAX 34%
      - 5B-3 REV MIN 29%
      - 5B-4 REV MAX 35%
      - 5B-5 ACCEL 1.5 sec
      - 5B-6 DECEL 5.0 sec
    - 5C LIFT
      - 5C-1 UP MIN 36%
      - 5C-2 UP MAX 100%
      - 5C-3 DOWN MIN 36%
      - 5C-4 DOWN MAX 49%
      - 5C-5 ACCEL 3.0 sec
      - 5C-6 DECEL 0.5 sec
      - 5C-7 MAX HEIGHT 94%
      - 5C-8 ARMGUARD
        - 5C-8a TIME 0.0 sec
        - 5C-8b @HEIGHT 101%
    - 5D STEER
      - 5D-1 SPEED 50%
      - 5D-2 DRIVE COMP 60%
      - 5D-3 DRIVE COMP ELEVATED 40%
      - 5D-4 ACCEL 0.2 sec
      - 5D-5 DECEL 0.2 sec
    - 5E DECK (not used)
      - 5E-1 OUT MIN 20%
      - 5E-2 OUT MAX 100%
      - 5E-3 IN MIN 20%
      - 5E-4 IN MAX 100%
      - 5E-5 ACCEL 3.0 sec
      - 5E-6 DECEL 3.0 sec
    - 5F OUTRIGGERS
      - 5F-1 OUTRIGGERS 3
      - 5F-2 EXTEND 80%
      - 5F-3 LEVEL 60%
      - 5F-4 RETRACT 60%
      - 5F-5 DEBOUNCE 0.40 sec
      - 5F-6 INITIAL 1.5 sec
      - 5F-7 TILT FILTER 6
      - 5F-8 X TILT TARGET 0.2°
      - 5F-9 Y TILT TARGET 0.2°
      - 5F-10 TILT SLACK 0.3°
    - 5G GROUND MODE
      - 5G-1 UP 65%
      - 5G-2 DOWN 49%
      - 5G-3 OUT 50%
      - 5G-4 IN 50%
      - 5G-5 ACCEL 3.0 sec
      - 5G-6 DECEL 1.0 sec
    - 5H TILT
      - 5H-1 X TRIP 2.0°
      - 5H-2 Y TRIP 2.0°
      - 5H-3 DELAY TRIP 2.0 sec
      - 5H-4 DELAY CLEAR 0.5 sec
      - 5H-5 TILT 2 0.5 sec
        - 5H-5a @HEIGHT 101%
        - 5H-5b X TRIP 2 1.5°
        - 5H-5c Y TRIP 2 1.5°
    - 5I OVERLOAD
      - 5I-1 TRIP@ 110%
      - 5I-2 LAMP@ 0%
      - 5I-3 ALARM@ 0%
      - 5I-4 @HEIGHT 8%
      - 5I-5 SAFE DOWN 12%
      - 5I-6 DELAY TRIP 1.5 sec
      - 5I-7 DELAY CLEAR 1.5 sec
      - 5I-8 OVERLOAD 2
        - 5I-8a @HEIGHT 46%
        - 5I-8b SCALE 100%
    - 5J ALARMS
      - 5J-1 DRIVE 0: NO
      - 5J-2 LIFT 2: DOWN
      - 5J-3 TILT 1: WHEN ELEVATED
    - 5K HEIGHTS
      - 5K-1 ELEVATION@ 5%
      - 5K-2 MAX DRIVE 101% STD
      - 5K-3 MAX LIFT 94%
      - 5K-4 ARMGUARD 101%
      - 5K-5 OVERLOAD 8%
      - 5K-6 SAFE DOWN 12%
      - 5K-7 OVERLOAD#2 46%
      - 5K-8 TILT #2 101%
- 6 SETUPS
  - ENTER
    - 6A CHANGE DEFAULTS
      - 6A-1 CUSTOMER 4=5492RT
      - 6A-2 MODEL SELECT
        - 1:
        - 2:
        - 3:
        - 4:
        - 5:
        - 6:
        - 7:
        - 8: 5492RT CE
    - 6B TILT SETUPS
      - 6B-1 CALIBRATE LEVEL
      - 6B-2 TILT SHUTDOWN 0: NEVER
      - 6B-3 ELEV TILT SHUTDOWN 1: LIFT & DRIVE
      - 6B-4 AXLE TILT 3.0°
    - 6C HEIGHT SETUPS
      - 6C-1 ELEVATION @ 3%
      - 6C-2 CALIBRATE HEIGHT
      - 6C-3 MIN LIFT 1.0 sec
      - 6C-4 SAMPLES@ 0.3 sec
      - 6C-5 TILT CORRECTION 2=X-
      - 6C-6 SLOWDOWN 5%
    - 6D LOAD SETUPS
      - 6D-1 CALIBRATE LOAD
      - 6D-2 FAULTY LOAD -100%
      - 6D-3 DYNAMIC SCALE 95%
      - 6D-4 DELAY UP 0.0 sec
      - 6D-5 DELAY DOWN 0.0 sec
    - 6E INTERLOCKS
      - 6E-1 TRIGGER ONLY 10.0 sec
      - 6E-2 TRIGGER WAIT 0.0 sec
      - 6E-3 FUNCTION HOLD 0.2 sec
      - 6E-4 THROTTLE DELAY 0.0 sec
      - 6E-5 STARTER DELAY 10.0 sec

ILLUSTRATION No. ART_3536

Adjustments & Setup

EZ-Cal Flow Chart

6092RT
ANSI Models
~#12900032

SYMBOL	KEY FUNCTIONS
ESC ENTER ◀ ▶ ▲ ▼	**ESC/ENTER BUTTONS** To move back and forth between menu and sub-menu **LEFT/RIGHT BUTTONS** Select menus and setting to be adjusted **UP/DOWN BUTTONS** Adjust setting values

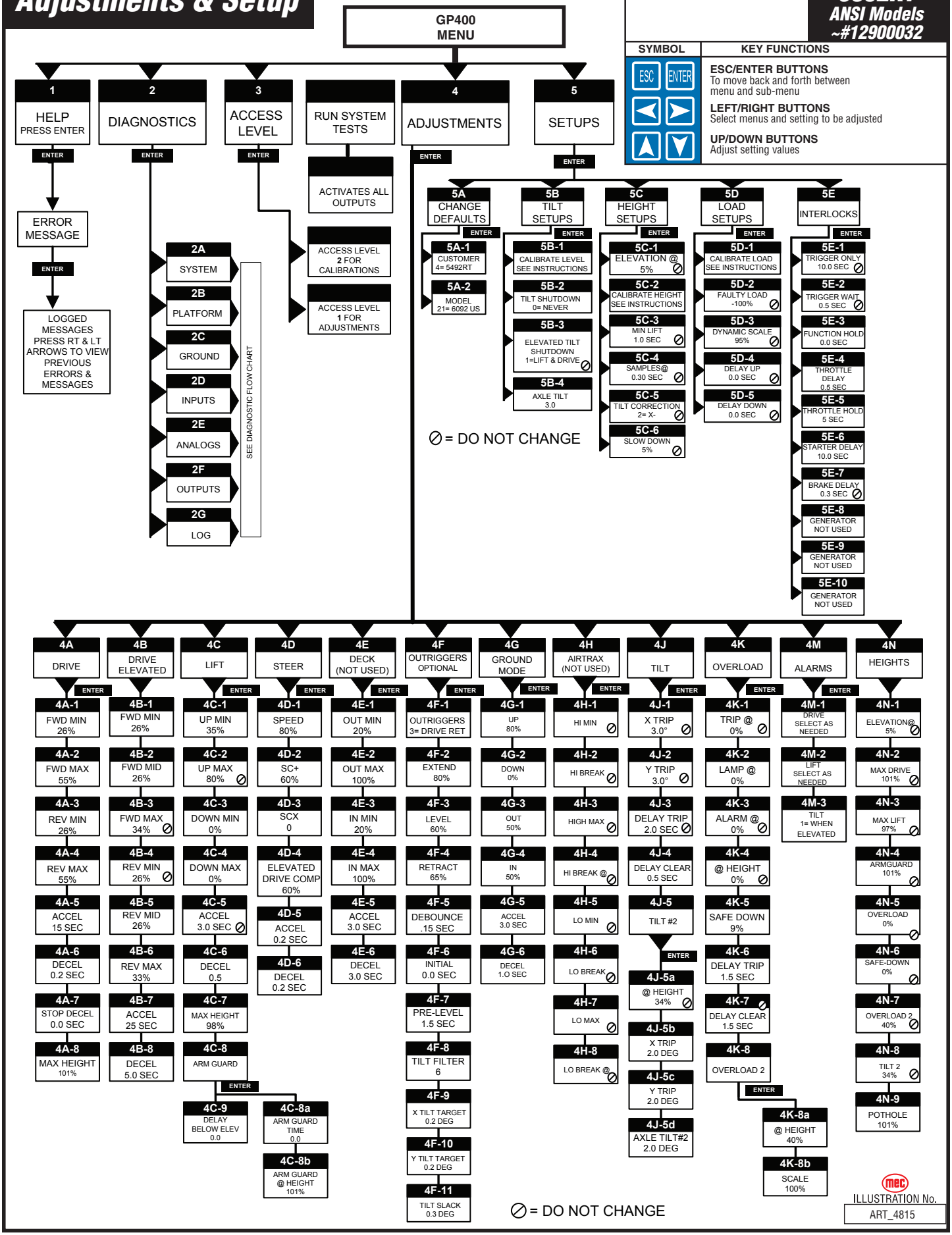

Adjustments & Setup

EZ-Cal Flow Chart

6092RT
ANSI Models
#12900033~

SYMBOL	KEY FUNCTIONS
ESC ENTER	**ESC/ENTER BUTTONS** To move back and forth between menu and sub-menu
	LEFT/RIGHT BUTTONS Select menus and setting to be adjusted
	UP/DOWN BUTTONS Adjust setting values

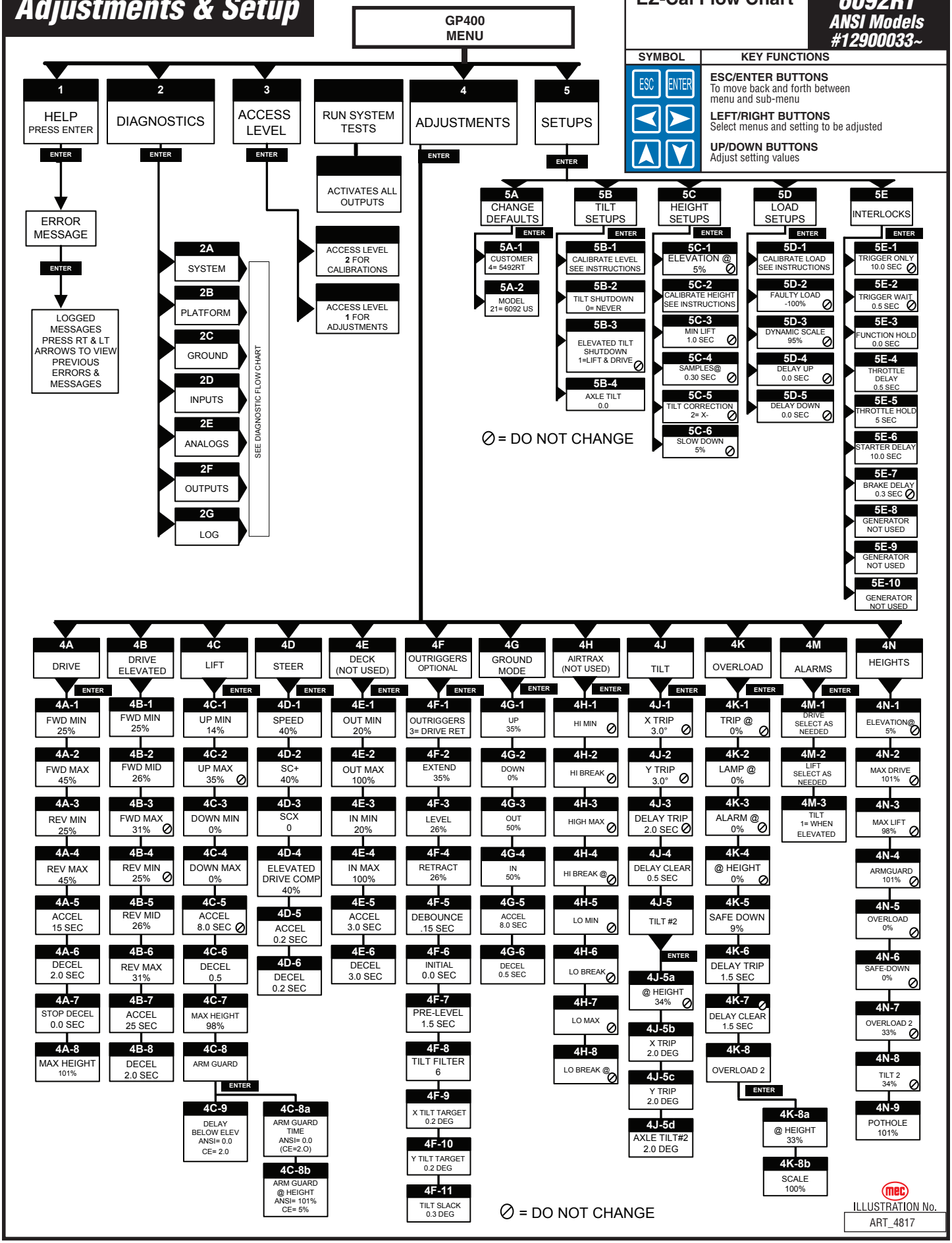

Adjustments & Setup

EZ-Cal Flow Chart

6092RT Optional Load Sensing System

SYMBOL	KEY FUNCTIONS
ESC ENTER ◀ ▶ ▲ ▼	**ESC/ENTER BUTTONS** To move back and forth between menu and sub-menu **LEFT/RIGHT BUTTONS** Select menus and setting to be adjusted **UP/DOWN BUTTONS** Adjust setting values

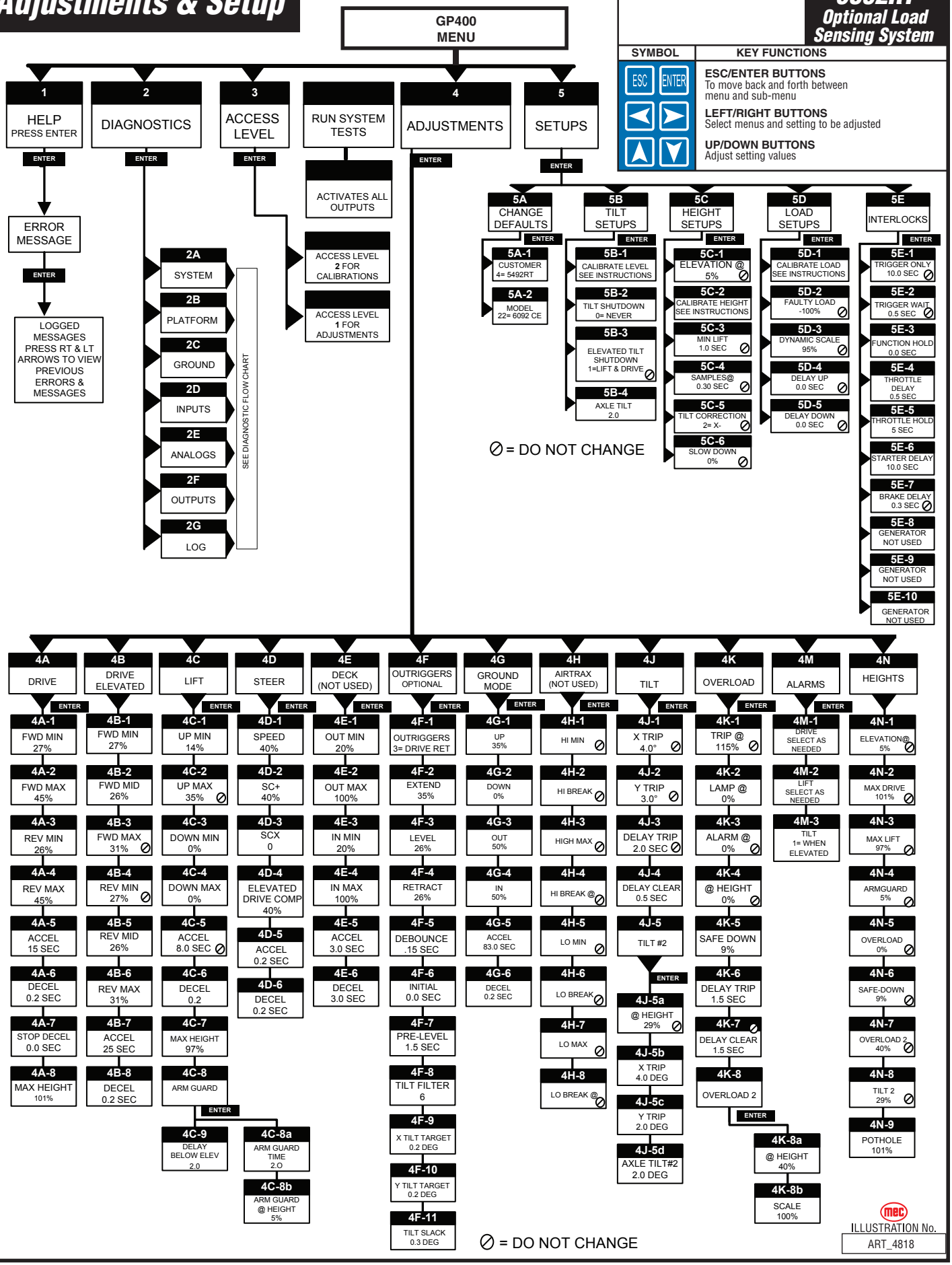

ILLUSTRATION No. ART_4818

Adjustments & Setup

EZ-Cal Flow Chart

3392RT-T
~#13600044

SYMBOL	KEY FUNCTIONS
ESC ENTER ◀ ▶ ▲ ▼	**ESC/ENTER BUTTONS** To move back and forth between menu and sub-menu **LEFT/RIGHT BUTTONS** Select menus and setting to be adjusted **UP/DOWN BUTTONS** Adjust setting values

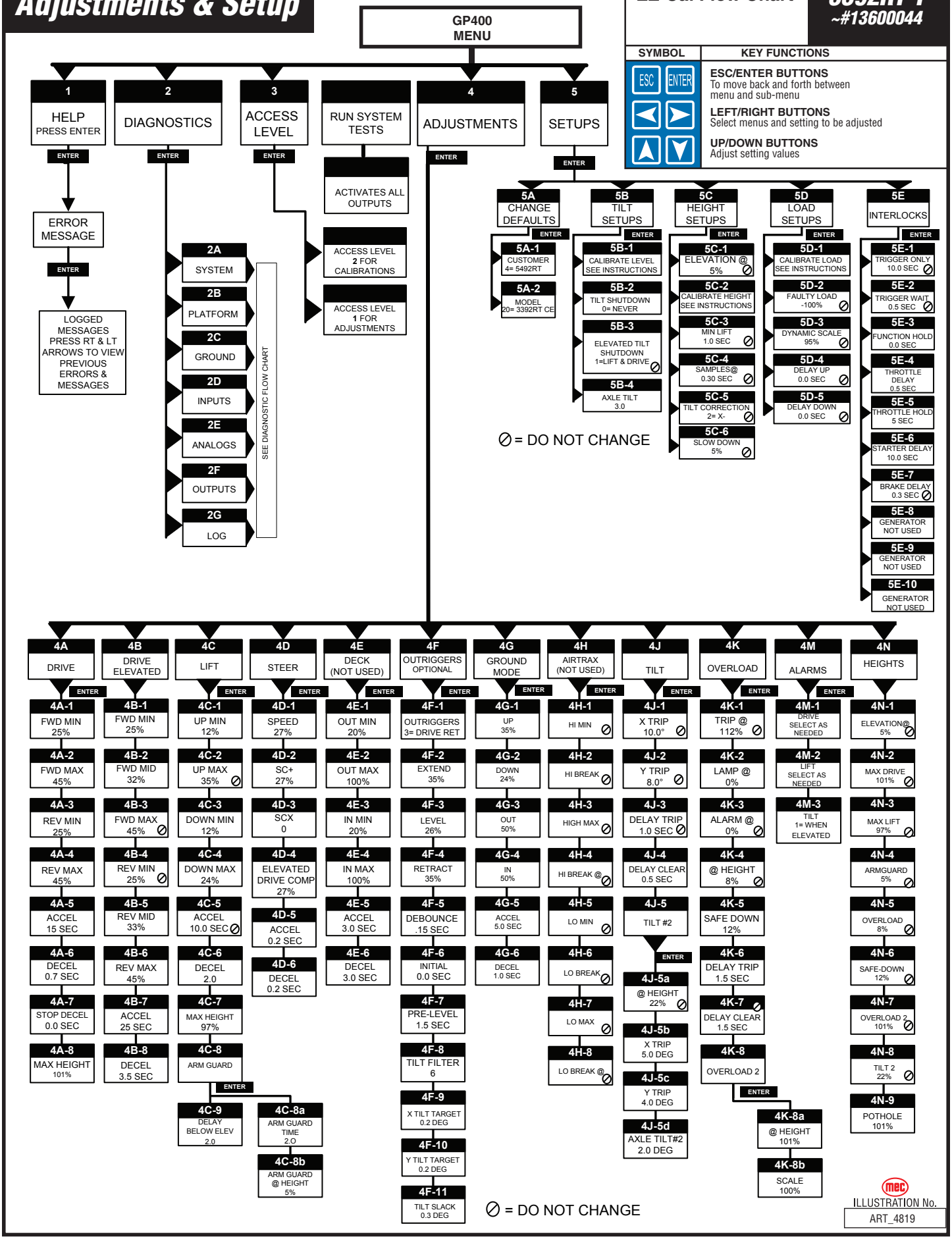

ILLUSTRATION No.
ART_4819

For information regarding the Adjustments & Setup Flow Chart for later 3392RT-T models, please contact MEC Customer Service at 1-877-632-5438.

Diagnostic Flow Charts

Following are the Diagnostic flow charts for the machine models covered by this manual.

DIAGNOSTIC

Use in conjunction with Diagnostic Tables for thorough explaination of readout and values.

GP400 MENU

2 DIAGNOSTICS

ENTER

EZ-Cal Flow Chart
Chart 2 of 2

5492RT ANSI Models

SYMBOL	KEY FUNCTIONS
ESC ENTER ◀ ▶ ▲ ▼	**ESC/ENTER BUTTONS** To move back and forth between menu and sub-menu **LEFT/RIGHT BUTTONS** Select menus and setting to be adjusted **UP/DOWN BUTTONS** Adjust setting values

2A SYSTEM
- 2A-1 MODE
- 2A-2 SUPPLY
- 2A-3 VALVE SUPPLY
- 2A-4 MOTOR VOLTS (ES ONLY)
- 2A-5 MOTOR AMPS (ES ONLY)
- 2A-6 TEMPERATURE (ES ONLY)
- 2A-7 TILT
- 2A-8 TILTED Y or N
- 2A-9 HEIGHT (CE ONLY)
- 2A-10 LOAD (CE ONLY)
- 2A-11 OVERLOADED Y or N (CE ONLY)
- 2A-12 NOT USED
- 2A-13 ELEVATED Y or N
- 2A-14 OUTRIGGER Y or N
- 2A-15 AXLE
  - 2A-15a LEVEL / OFF LEVEL
  - 2A-15b LOCKED Y or N
  - 2A-15c ANGLE
- 2A-2a SUPPLY 12 V DC
- 2A-2b SUPPLY CAP BANK
- 2A-7a TILT FILTERED
- 2A-7b TILT LOCAL
- 2A-9a HEIGHT #1
- 2A-9b HEIGHT #2
- 2A-14a RETRACTED Y or N
- 2A-14b EXTENDED Y or N
- 2A-14c STATUS
- 2A-14d OUTRIGGER TEST
- 2A-14e AUTO RETRACT

2B PLATFORM
- 2B-1 TRIGGER ON / OFF
- 2B-2 DLD
- 2B-3 JOYSTICK
- 2B-4 FWD / DWN OFF / ON
- 2B-5 REV / UP OFF / ON
- 2B-6 LEFT OFF / ON
- 2B-7 RIGHT OFF / ON
- 2B-8 POSITRAC Y or N
- 2B-9 NOT USED

2C GROUND
- 2C-1 UP ON / OFF
- 2C-2 DOWN ON / OFF
- 2C-3 NOT USED
- 2C-4 NOT USED
- 2C-5 NOT USED

2D INPUTS
- 2D-1 P7-1 12 V SUPPLY
- 2D-2 P7-2 BASE SELECTED
- 2D-3 P7-3 UP SELECTED
- 2D-4 P7-4 PLATFORM SELECTED
- 2D-5 P7-7 DOWN SELECTED
- 2D-6 P7-10 CHOKE
- 2D-7 P7-12 THROTTLE
- 2D-8 P7-13 OIL PRESSURE SWITCH
- 2D-9 P15-5 L/R O.R. UP
- 2D-10 P15-6 R/R O.R. UP
- 2D-11 P15-7 R/F O.R. UP
- 2D-12 P15-8 L/F O.R. UP

2E ANALOGS LOAD SENSE
- 2E-1 P8-2 ANGLE TRANSDUCER
- 2E-2 P8-5 ANGLE TRANSDUCER
- 2E-3 P8-6 PRESSURE TRANSDUCER

2F OUTPUTS
- 2F-1 P4-1 CHOKE/PREHEAT
- 2F-2 P4-2 START
- 2F-3 P4-4 THROTTLE
- 2F-4 P4-7 ALT EXCITE
- 2F-5 P4-8 IGNITION
- 2F-6 P4-9 DRIVE FWD
- 2F-7 P4-10 DRIVE REV
- 2F-8 P4-12 PROPORTIONALS
- 2F-9 P4-14 DOWN
- 2F-10 P5-1 LIFTS
- 2F-11 P5-2 STEER RIGHT
- 2F-12 P5-3 STEER LEFT
- 2F-13 P5-6 ALARM
- 2F-14 P5-8 HIGH SPEED
- 2F-15 P5-9 HOUR METER
- 2F-16 P5-10 O.R. EXT
- 2F-17 P5-11 O.R. RETR
- 2F-18 P5-12 LIMIT SWITCH,TBM
- 2F-19 P5-14 START DELAY LIGHT
- 2F-20 P6-1 RF O.R. VALVE
- 2F-21 P6-2 LF O.R. VALVE
- 2F-22 P6-3 RR O.R. VALVE
- 2F-23 P6-4 LR O.R. VALVE
- 2F-24 P6-13 AXLE LOCK
- 2F-25 P6-15 GENERATOR

2G LOG
- 2G-1 CAL DATE (CE ONLY)
- 2G-2 SOFTWARE
- 2G-3 POWERED

P4

P4-1	*CHOKE/PREHEAT*	ON = activated
P4-2	*START SWITCH*	ON = Starter activated
P4-4	*THROTTLE SOLENOID*	ON = Solenoid pulled in
P4-7	*ALTERNATOR EXCITE*	ON = Alternator activated
P4-8	*IGNITION SWITCH*	ON = Power to fuel solenoid
P4-9	*DRIVE FORWARD*	ON = FWD valve activated
P4-10	*DRIVE REVERSE*	ON = REV valve activated
P4-12	*PROPORTIONAL VALVE*	ON = Proportional valve activated
P4-14	*DOWN VALVES*	ON = Down Valves activated

P5 MANIFOLD & MISC

P5-1	*LIFT VALVE*	ON = Lift Valve activated
P5-2	*STEER RIGHT*	ON = Valve activated
P5-3	*STEER LEFT*	ON = Valve activated
P5-6	*ALARM*	ON = Alarm activated
P5-8	*HIGH SPEED*	ON = Valve activated
P5-9	*HOUR METER*	ON = Meter is powered
P5-10	*OUTRIGGER EXTEND VALVE*	ON = Valve activated
P5-11	*OUTRIGGER RETRACT VALVE*	ON = Valve activated
P5-12	*LIMIT SWITCH, TBM POWER SUPPLY*	ON = When system powered
P5-14	*START DELAY INDICATOR LIGHT*	ON = 30-sec. starter cut-out

P6 OUTRIGGER MANIFOLD

P6-1	*RIGHT FRONT OUTRIGGER VALVE*	ON = Valve activated
P6-2	*LEFT FRONT OUTRIGGER VALVE*	ON = Valve activated
P6-3	*RIGHT REAR OUTRIGGER VALVE*	ON = Valve activated
P6-4	*LEFT REAR OUTRIGGER VALVE*	ON = Valve activated
P6-13	*AXLE LOCK VALVES*	ON = Valve powered
P6-15	*GENERATOR RELAY SIGNAL*	ON = Generator activated

P7 BASE & LOWER CONTROLS

P7-1	*BATTERY VOLTAGE from TBM*	ON = Voltage, OFF = No Voltage
P7-2	*BASE SELECTED*	ON = Base Controls
P7-3	*UP SWITCH (BASE CONTROLS)*	ON = Up activated
P7-4	*PLATFORM SELECTED*	ON = Platform Controls
P7-7	*DOWN SWITCH (BASE CONTROLS)*	ON = Down activated
P7-10	*CHOKE/PREHEAT*	ON = activated
P7-12	*START*	ON = Start Switch activated
P7-13	*OIL PRESSURE SWITCH*	

P15 OUTRIGGER CONTROLS

P15-5	*L/R OUTRIGGER UP SWITCH*	ON = Leg extended & set
P15-6	*R/R OUTRIGGER UP SWITCH*	ON = Leg extended & set
P15-7	*R/F OUTRIGGER UP SWITCH*	ON = Leg extended & set
P15-8	*L/F OUTRIGGER UP SWITCH*	ON = Leg extended & set

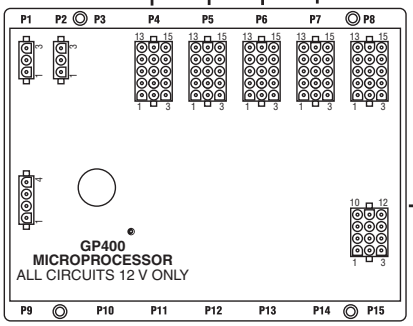

ILLUSTRATION No.
ART_3535

DIAGNOSTIC

Use in conjunction with Diagnostic Tables for thorough explaination of readout and values.

EZ-Cal Flow Chart
Chart 2 of 2

5492RT Optional Load Sensing System

SYMBOL	KEY FUNCTIONS
ESC ENTER ◀ ▶ ▲ ▼	**ESC/ENTER BUTTONS** To move back and forth between menu and sub-menu **LEFT/RIGHT BUTTONS** Select menus and setting to be adjusted **UP/DOWN BUTTONS** Adjust setting values

GP400 MENU → 2 DIAGNOSTICS → ENTER

- **2A SYSTEM**
  - 2A-1 MODE
  - 2A-2 SUPPLY
  - 2A-3 VALVE SUPPLY
  - 2A-4 MOTOR VOLTS (ES ONLY)
  - 2A-5 MOTOR AMPS (ES ONLY)
  - 2A-6 TEMPERATURE (ES ONLY)
  - 2A-7 TILT
  - 2A-8 TILTED Y or N
  - 2A-9 HEIGHT (CE ONLY)
  - 2A-10 LOAD (CE ONLY)
  - 2A-11 OVERLOADED Y or N (CE ONLY)
  - 2A-12 NOT USED
  - 2A-13 ELEVATED Y or N
  - 2A-14 OUTRIGGER Y or N
  - 2A-15 AXLE
    - 2A-15a LEVEL / OFF LEVEL
    - 2A-15b LOCKED Y or N
    - 2A-15c ANGLE
  - 2A-2a SUPPLY 12 V DC
  - 2A-2b SUPPLY CAP BANK
  - 2A-7a TILT FILTERED
  - 2A-7b TILT LOCAL
  - 2A-9a HEIGHT #1
  - 2A-9b HEIGHT #2
  - 2A-14a RETRACTED Y or N
  - 2A-14b EXTENDED Y or N
  - 2A-14c STATUS
  - 2A-14d OUTRIGGER TEST
  - 2A-14e AUTO RETRACT
- **2B PLATFORM**
  - 2B-1 TRIGGER ON / OFF
  - 2B-2 DLD
  - 2B-3 JOYSTICK
  - 2B-4 FWD / DWN OFF / ON
  - 2B-5 REV / UP OFF / ON
  - 2B-6 LEFT OFF / ON
  - 2B-7 RIGHT OFF / ON
  - 2B-8 POSITRAC Y or N
  - 2B-9 NOT USED
- **2C GROUND**
  - 2C-1 UP ON / OFF
  - 2C-2 DOWN ON / OFF
  - 2C-3 NOT USED
  - 2C-4 NOT USED
  - 2C-5 NOT USED
- **2D INPUTS**
  - 2D-1 P7-1 12 V SUPPLY
  - 2D-2 P7-2 BASE SELECTED
  - 2D-3 P7-3 UP SELECTED
  - 2D-4 P7-4 PLATFORM SELECTED
  - 2D-5 P7-7 DOWN SELECTED
  - 2D-6 P7-10 CHOKE
  - 2D-7 P7-12 THROTTLE
  - 2D-8 P7-13 OIL PRESSURE SWITCH
  - 2D-9 P15-5 L/R O.R. UP
  - 2D-10 P15-6 R/R O.R. UP
  - 2D-11 P15-7 R/F O.R. UP
  - 2D-12 P15-8 L/F O.R. UP
- **2E ANALOGS LOAD SENSE**
  - 2E-1 P8-2 ANGLE TRANSDUCER
  - 2E-2 P8-5 ANGLE TRANSDUCER
  - 2E-3 P8-6 PRESSURE TRANSDUCER
- **2F OUTPUTS**
  - 2F-1 P4-1 CHOKE/PREHEAT
  - 2F-2 P4-2 START
  - 2F-3 P4-4 THROTTLE
  - 2F-4 P4-7 ALT EXCITE
  - 2F-5 P4-8 IGNITION
  - 2F-6 P4-9 DRIVE FWD
  - 2F-7 P4-10 DRIVE REV
  - 2F-8 P4-12 PROPORTIONALS
  - 2F-9 P4-14 DOWN
  - 2F-10 P5-1 LIFTS
  - 2F-11 P5-2 STEER RIGHT
  - 2F-12 P5-3 STEER LEFT
  - 2F-13 P5-6 ALARM
  - 2F-14 P5-8 HIGH SPEED
  - 2F-15 P5-9 HOUR METER
  - 2F-16 P5-10 O.R. EXT
  - 2F-17 P5-11 O.R. RETR
  - 2F-18 P5-12 LIMIT SWITCH,TBM
  - 2F-19 P5-14 START DELAY LIGHT
  - 2F-20 P6-1 RF O.R. VALVE
  - 2F-21 P6-2 LF O.R. VALVE
  - 2F-22 P6-3 RR O.R. VALVE
  - 2F-23 P6-4 LR O.R. VALVE
  - 2F-24 P6-13 AXLE LOCK
  - 2F-25 P6-15 GENERATOR
- **2G LOG**
  - 2G-1 CAL DATE (CE ONLY)
  - 2G-2 SOFTWARE
  - 2G-3 POWERED

P4

P4-1	*CHOKE/PREHEAT*	ON = activated
P4-2	*START SWITCH*	ON = Starter activated
P4-4	*THROTTLE SOLENOID*	ON = Solenoid pulled in
P4-7	*ALTERNATOR EXCITE*	ON = Alternator activated
P4-8	*IGNITION SWITCH*	ON = Power to fuel solenoid
P4-9	*DRIVE FORWARD*	ON = FWD valve activated
P4-10	*DRIVE REVERSE*	ON = REV valve activated
P4-12	*PROPORTIONAL VALVE*	ON = Proportional valve activated
P4-14	*DOWN VALVES*	ON = Down Valves activated

P5 MANIFOLD & MISC

P5-1	*LIFT VALVE*	ON = Lift Valve activated
P5-2	*STEER RIGHT*	ON = Valve activated
P5-3	*STEER LEFT*	ON = Valve activated
P5-6	*ALARM*	ON = Alarm activated
P5-8	*HIGH SPEED*	ON = Valve activated
P5-9	*HOUR METER*	ON = Meter is powered
P5-10	*OUTRIGGER EXTEND VALVE*	ON = Valve activated
P5-11	*OUTRIGGER RETRACT VALVE*	ON = Valve activated
P5-12	*LIMIT SWITCH, TBM POWER SUPPLY*	ON = When system powered
P5-14	*START DELAY INDICATOR LIGHT*	ON = 30-sec. starter cut-out

P6 OUTRIGGER MANIFOLD

P6-1	*RIGHT FRONT OUTRIGGER VALVE*	ON = Valve activated
P6-2	*LEFT FRONT OUTRIGGER VALVE*	ON = Valve activated
P6-3	*RIGHT REAR OUTRIGGER VALVE*	ON = Valve activated
P6-4	*LEFT REAR OUTRIGGER VALVE*	ON = Valve activated
P6-13	*AXLE LOCK VALVES*	ON = Valve powered
P6-15	*GENERATOR RELAY SIGNAL*	ON = Generator activated

P7 BASE & LOWER CONTROLS

P7-1	*BATTERY VOLTAGE from TBM*	ON = Voltage, OFF = No Voltage
P7-2	*BASE SELECTED*	ON = Base Controls
P7-3	*UP SWITCH (BASE CONTROLS)*	ON = Up activated
P7-4	*PLATFORM SELECTED*	ON = Platform Controls
P7-7	*DOWN SWITCH (BASE CONTROLS)*	ON = Down activated
P7-10	*CHOKE/PREHEAT*	ON = activated
P7-12	*START*	ON = Start Switch activated
P7-13	*OIL PRESSURE SWITCH*	

P15 OUTRIGGER CONTROLS

P15-5	*L/R OUTRIGGER UP SWITCH*	ON = Leg extended & set
P15-6	*R/R OUTRIGGER UP SWITCH*	ON = Leg extended & set
P15-7	*R/F OUTRIGGER UP SWITCH*	ON = Leg extended & set
P15-8	*L/F OUTRIGGER UP SWITCH*	ON = Leg extended & set

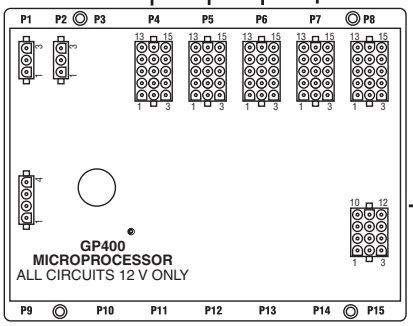

ILLUSTRATION No.
ART_3537

Diagnostic

NOTE: All other plug numbers that appear on the EZ-cal but not listed here are not used on this model

6092RT SERIES ANSI & CE
EZ-CAL MENU

2
DIAGNOSTICS

ENTER

EZ-Cal Flow Chart

6092RT
3392RT-T
All Models

SYMBOL	KEY FUNCTIONS
ESC ENTER	**ESC/ENTER BUTTONS** To move back and forth between menu and sub-menu
	LEFT/RIGHT BUTTONS Select menus and setting to be adjusted
	UP/DOWN BUTTONS Adjust setting values

2A SYSTEM — ENTER
- 2A-1 MODE — PRESS ENTER FOR MESSAGES
- 2A-2 SUPPLY — ENTER
- 2A-3 VALVE SUPPLY — ON/OFF
- 2A-4 MOTOR VOLTS — NOT USED
- 2A-5 MOTOR AMPS — NOT USED
- 2A-6 TEMPERATURE — NOT USED
- 2A-7 TILT ACTUAL — ENTER
- 2A-8 TILTED — YES WHEN PAST TRIP ANGLE.
- 2A-9 HEIGHT — ACTUAL IN %
- 2A-10 LOAD — IN % CE ONLY
- 2A-11 OVERLOADED — YES or NO
- 2A-12 LAST MOVED ACTUAL
- 2A-13 ELEVATED — YES or NO
- 2A-14 OUTRIGGERS — STATUS OF OUTRIGGERS
- 2A-15 AXLE — LEVEL/OFF LEVEL
- 2A-16 GEN STATE — IF EQUIPPED
- 2A-16 GEN DEB — IF EQUIPPED

- 2A-2a SUPPLY — 12 VOLTS DC
- 2A-2b SUPPLY — NOT USED
- 2A-7a TILT FILTERED — NOT USED
- 2A-7b TILT LOCAL — ACTUAL IN DEGREES LEVEL

2B PLATFORM — ENTER
- 2B-1 TRIGGER — ON/OFF
- 2B-2 DLD — ACTUAL
- 2B-3 JOYSTICK — ACTUAL DEG OF MOVEMENT
- 2B-4 JOYSTICK — JOY2 NOT USED
- 2B-5 FWD / UP — FWD JOYSTCK MOVEMENT
- 2B-6 REV / UP — REV JOYSTICK MOVEMENT
- 2B-7 LEFT(STEER) — ON/OFF
- 2B-8 RIGHT (STEER) — ON/OFF
- 2B-9 POSITRAC — ON/OFF
- 2B-10 EMSp — NOT USED
- 2B-11 AIRTRAX — NOT USED

2C GROUND — ENTER
- 2C-1 UP — ON/OFF
- 2C-2 DOWN — ON/OFF
- 2C-3 OUT — NOT USED
- 2C-4 IN — NOT USED

2D INPUTS — ENTER
- 2D-1 P7-1 — 12 V SUPPLY
- 2D-2 P7-2 — BASE SELECTED
- 2D-3 P7-3 — UP SELECTED
- 2D-4 P7-4 — PLATFORM SELECTED
- 2D-5 P7-7 — DOWN SWITCH
- 2D-6 P7-10 — GLOW PLUGS
- 2D-7 P7-12 — START SWITCH
- 2D-8 P7-13 — OIL PRESSURE SWITCH
- 2D-9 P15-5 — O/R DOWN SWITCH L/R
- 2D-10 P15-6 — O/R DOWN SWITCH R/R
- 2D-11 P15-7 — O/R DOWN SWITCH R/F
- 2D-12 P15-8 — O/R DOWN SWITCH L/F

2E ANALOGS — ENTER
- 2E-1 P8-2 — ANGLE TRANSDUCER 1
- 2E-2 P8-5 — ANGLE TRANSDUCER 2 CE ONLY
- 2E-3 P8-6 — PRESSURE TRANSDUCER CE ONLY
- 2E-4 P8-9 — TBM IN
- 2E-5 MATRIX ANALOGS — UPPER CONTROL — ENTER
- 2E-5a M2-6 — POTENTIOMETER

2F OUTPUTS — ENTER
- 2F-1 P4-1 — CHOKE/PREHEAT
- 2F-2 P4-2 — START
- 2F-3 P4-4 — THROTTLE
- 2F-4 P4-7 — ALTERNATOR EXCITE
- 2F-5 P4-8 — IGNITION
- 2F-6 P4-14 — DOWN VALVE
- 2F-7 P5-1 — LIFT VALVE
- 2F-8 P5-2 — STEER RIGHT
- 2F-9 P5-3 — STEER LEFT
- 2F-10 P5-6 — ALARM
- 2F-11 P5-8 — HIGH SPEED
- 2F-12 P5-9 — HOUR METER
- 2F-13 P5-10 — OUTRIGGER EXTEND VALVE
- 2F-14 P5-11 — OUTRIGGER RETRACT VALVE
- 2F-15 P5-14 — START INHIBIT WARNING
- 2F-16 P6-1 — R/F OUTRIGGER VALVE
- 2F-17 P6-2 — L/F OUTRIGGER VALVE
- 2F-18 P6-3 — R/R OUTRIGGER VALVE
- 2F-19 P6-4 — L/R OUTRIGGER VALVE
- 2F-20 P6-8 — BRAKE
- 2F-21 P6-13 — AXLE LOCK VALVE
- 2F-22 P6-15 — A/C GENERATOR
- 2F-23 VCCM ANALOGS — ENTER
  - 2F-23a VCCM 1-1 — DRIVE FWD VALVE
  - 2F-23b VCCM 1-2 — DRIVE REV VALVE
  - 2F-23c VCCM 1-5 — PROPORTIONAL VALVE

2G LOG — ENTER
- 2G-1 CALDATE — DATE OF CALIBRATION
- 2G-2 SOFTWARE — SOFTWARE VERSION NUMBER
- 2G-3 POWERED — ACCUMULATED HRS ON GP400
- 2G-4 MAX BATTERY — HIGHEST BATT VOLTAGE

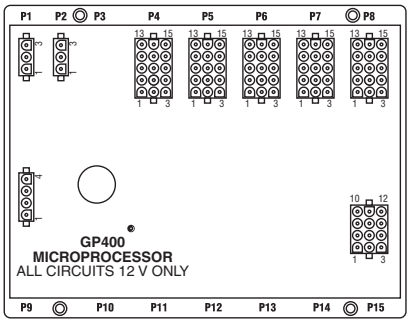

ILLUSTRATION No.
ART_4816

EZ-Cal Adjustment

EZ-Cal Adjustment

Refer to “Using the EZ-Cal Scan Tool” on page 102.

Adjustments are possible in Access Level 1 Only.

Before changing personalities, ensure that the correct customer and model have been selected in the SETUPS menu. Any changes to settings will be lost when the model or customer is changed.

To reach ADJUSTMENTS, first access Level 1, then press --> for ADJUSTMENTS. Press Enter, then press --> to scroll through the sub-menus.

Once the desired sub-menu is found, press Enter again, then --> to scroll through the personalities. Press the Up or Down arrows to change the personality. Press ESC to go back one or more levels to reach other sub-menus.

EZ-Cal Diagnostics

The EZ-Cal Diagnostics menu provides the ability to view and test individual circuits for irregularities. Whether diagnosing a failure or testing functions during preventative maintenance, the Diagnostics Menu provides a quick view at the inputs and outputs as registered by the GP400 Control Module in real time. Using the EZ-Cal Flow Chart, compare ID number to this menu for circuit identification and result.

To reach DIAGNOSTICS menu from HELP;

- Press the right arrow and scroll to DIAGNOSTICS and press ENTER.
- Locate the desired sub menu and press ENTER.
- Press the right arrow to scroll through the test points.

Note: The ID number will not appear on the EZ-Cal display. It is shown in the Diagnostics Menu for reference only.

Using the ID number, match specific personalities from the Diagnostic Flow Charts with this table for additional information.

Press ESC to go back one level (necessary to change selection).

EZ-Cal Retrieve Mode And Help Messages

Note: It is important to understand that an error message will only be available if the red Diagnostic LED is flashing. If the machine is not operating properly and the red Diagnostic LED is not flashing, the trouble may lie with something not monitored by the electronic control system, i.e. a switch, hydraulic valve or wiring damage.

There are two different menus that you can access for message retrieval; MODE and HELP.

MODE Menu

Allows the technician to see the current state of the controller with a short description. Go to, DIAGNOSTICS/SYSTEM/MODE (EZ-Cal Flow Chart 2, ID# 2a-1). Pressing ENTER a second time will provide additional information with certain messages.

HELP Menu

Provides various HELP messages to identify failure modes.

Some error messages may also be identified by counting the number of times the red LED flashes on the controller so that even without access to an EZ-Cal, some simple diagnostics are possible. However, it is recommended to use an EZ-Cal to diagnose problems, and not rely on the LED! The EZ-Cal provides a much higher detail of information.

HELP Message

- Connect the EZ-Cal (see illustration). The display will read, “HELP: PRESS ENTER”.
- Press Enter to display the current message.
- Refer to the following list of HELP messages to better understand the nature of the message or fault.
-
- If the GP400 does not register a fault, the display will read EVERYTHING OK.

Pressing ENTER twice will provide a scrolling message of the current message (if one exists).

Pressing RT and LT arrows provides access to a log of previous operations and/or errors that occurred immediately prior, starting with most recent. All messages are cleared whenever the system is powered down.

Other helpful menus available include DIAGNOSTICS which allows the technician to monitor specific plug input/output information. Refer to EZ-Cal Flow Chart 2 – Diagnostics (ANSI - Page 111; Optional Load Sensing System - Page 112).

MODE Messages

The purpose of MODE is to indicate, in real time, the current state of the controller with a short description.

INITIALIZING

- The system is preparing to operate, immediately after power-on.

SHUTDOWN!
- The system cannot operate – for example both the PLATFORM & GROUND inputs are active together.

CHECK CANBUS
- The system cannot operate – CANBUS communications is not successful (for example wire damage to the platform)

PLATFORM, GROUND
- The system is ready to operate, from the upper or lower controls as indicated (selected by the Base/Platform selector switch)

GROUND UP, GROUND DOWN,
- A ground function is operating normally

GROUND UP LOCKED, GROUND DOWN LOCKED,
- A ground function is selected but not allowed (for example, the function switch was closed at power-on)

GROUND FAULTY
- Multiple ground function inputs are active at the same time

WAITING FOR TRIGGER
- A platform function is selected, but the joystick trigger switch is not closed (close the trigger switch to proceed)

TRIGGER CLOSED
- The joystick trigger switch is closed, but no function is selected (select a function to proceed)

TRIGGER LOCKED
- The joystick trigger switch was closed at power-on, or closed for too long with no function selected (check trigger switch)

FORWARD, REVERSE
- A platform drive function is operating normally

FORWARD (LEFT), FORWARD (RIGHT), REVERSE (LEFT), REVERSE (RIGHT)
- A platform drive function is operating normally, with steer also active

STEER LEFT, STEER RIGHT
- A platform steer function is operating normally (without drive)

UP, DOWN
- A platform lift/lower function is operating normally

FORWARD LOCKED, REVERSE LOCKED
- A platform drive function is selected but not allowed (for example, the switch was closed at power-on)

LEFT LOCKED, RIGHT LOCKED
- A platform steer function is selected but not allowed (for example, the switch was closed at power-on)

UP LOCKED, DOWN LOCKED
- A platform lift/lower function is selected but not allowed (for example, the switch was closed at power-on)

CHECK DRIVE/LIFT
- Neither platform drive nor platform lift select is active, or both are active at the same time

CHECK JOYSTICK
- Both platform joystick directions are active at the same time

STEER FAULTY
- Both platform steer directions are active at the same time

EXTENDING LEGS
- Outrigger legs are extending normally

RETRACTING LEGS
- Outrigger legs are extending normally

OUTRIGGERS LOCKED
- An outrigger function is selected but not allowed (for example, the switch was closed at power-ON)

INTERLOCKED**
- An interlock shutdown is active, preventing one or more functions. The interlock can be due to many different causes …
- **Press <ENTER> from the MODE display to see the precise cause of the interlock (listed below) – press <ESC> from that display to return to the MODE display:

TEST MODE
- The system test mode is active – switch power off and on again to clear

TILTED
- The vehicle is tilted beyond limits, descend, then move vehicle to a more level location

OVERLOADED
- The vehicle platform is overloaded, reduce platform load. (Optional Load Sensing System option only)

TOO HIGH
- The vehicle platform is too high to allow some functions – descend first

ARMGUARD
- During descent, the system is configured to stop movement to provide an armguard delay – release and re-select DOWN to continue lowering (Optional Load Sensing System only)

TOO HOT

- The EZLIFT heatsink has reached 75ºc, preventing all functions except lowering. Functions will be allowed again when the heatsink cools to below 70ºc.
- The heatsink temperature can be viewed in the DIAGNOSTICS/SYSTEM/ TEMPERATURE display, ID # 2a5.
- The heatsink must be bolted to a significant metal panel of the vehicle, capable of dissipating heat to the environment.

UNCALIBRATED

- The height and/or pressure sensors have not been calibrated see CALIBRATION OF OVERLOAD SYSTEM (Optional Load Sensing System only).
- If machine is not equipped with Overload system, refer to SETUPS table and change those personalities that do not match the figure listed in the table.

EXTERNAL ALL, EXTERNAL DRIVE, EXTERNAL LIFT

- An external cutout input is preventing functions – determine the cause of the external cutout (for example, a limit switch)

EZ-Cal Help Messages

In addition to the MODE messages detailed above, the GP400 provides a HELP message to identify failure modes. Some error messages may also be identified by counting the number of times the red LED flashes on the controller so that even without access to an EZ-Cal, some simple diagnostics are possible. However, it is recommended to use an EZ-Cal to diagnose problems, and not rely on the LED! The EZ-Cal provides a much higher detail of information.

- Connect the EZ-Cal (see illustration). The display will read, “HELP: PRESS ENTER”.
- Press Enter to display the current message.
- Refer to the following list of HELP messages to better understand the nature of the message or fault.
- If the GP400 does not register a fault, the display will read EVERYTHING OK.

Pressing ENTER twice will provide a scrolling message of the current message (if one exists).

Pressing RT and LT arrows provides access to a log of previous operations and/or errors that occurred immediately prior, starting with most recent. All messages are cleared whenever the system is powered down.

Note: When using the LED to attempt diagnosis, please note that a DUAL FLASH code is indicated. The LED will flash on/off a certain number of times, pause off for a short delay, then flash on/off a second certain number of times, followed by a much longer pause off. The sequence will then repeat.

Information Only Messages

The following are “information only” HELP messages which are not indicative of any possible problem – there is no LED flash code (the LED remains on steady):

STARTUP! _____ (no flash code)

- The system has just been powered on and is carrying out some initialization steps prior to being ready to operate. If you select a function during this time, it may be locked out until you release

then re-select it.

EVERYTHING OK _____ (no flash code)

- There is no problem with the system – it is ready to operate in platform mode when a function is selected.

Note: If this is the HELP message when a function is selected, check for open-circuit switches or wiring.

GROUND MODE ACTIVE! _____ (no flash code)

- There is no problem with the GP400 – it is ready to operate in ground mode when a function is selected.

CLOSE TRIGGER _____ (no flash code)

- A platform function is selected but the trigger switch is not closed.

VEHICLE TILTED _____ (no flash code)

- The vehicle is tilted beyond the limits, some functions may be prevented.

Function Active Messages

The following HELP messages indicate that there is no problem with the GP400 but that a function is active – the vehicle should be moving as requested by the operator.

- **DRIVING! _____ (no flash code)**
- **LIFTING! _____ (no flash code)**
- **LOWERING! _____ (no flash code)**
- **STEERING! _____ (no flash code)**
- **EXTENDING OUTRIGGERS! _____ (no flash code)**
- **RETRACTING OUTRIGGERS! _____ (no flash code)**

Calibration Messages

The following are “calibration” HELP messages – until the machine is properly calibrated for height and/or pressure (as required), many functions will not be available.

NOT CALIBRATED _____ Flash Code: 1/1
FUNCTIONS LOCKED - NOT CALIBRATED _____ Flash Code: 1/1

- The height and/or pressure sensors have not been calibrated and are required because of the setup of the GP400.
- Calibration procedures are accessible from the SETUPS/HEIGHT SETUPS and SETUPS/LOAD SETUPS menus.

FAULT: CUSTOMER _____ Flash Code: 1/1

- The system must be configured to the customer requirements – with the EZ-Cal in SETUPS/CHANGE DEFAULTS menu, scroll to the correct machine from this menu, the press Right Arrow to select the appropriate model.

Note: Selecting the incorrect customer or model will cause the machine to operate incorrectly or go into fault mode.

Shutdown HELP Messages

This section lists “shutdown” HELP messages – functions can be shut down to prevent them being used:

SHUTDOWN - CHECK EMS SWITCHES!_____ Flash Code: 2/1

- The Base/Platform selector switch position indicates the mode in which the system must operate if both are active together; the system does not know how to function

FUNCTIONS LOCKED - TEST MODE SELECTED _____ Flash Code: 2/2

- Test mode is not accessible with this system. Switch power off/on to reset to normal operation

FUNCTIONS LOCKED - ARMGUARD (Optional Load Sensing System Only)
_____ Flash Code: 2/2

- During descent, the System can stop movement for a configurable time, to allow a safety check that no-one is close to the machine. The operator must release and re-select DOWN to continue lowering (after the delay time-out).

FUNCTIONS LOCKED – OVERLOADED (Optional Load Sensing System Only)
_____ Flash Code: 2/2

- System overload features are active, and the platform is excessively loaded to allow operation – the platform load must be reduced.

FUNCTIONS LOCKED – UNDERLOADED (Optional Load Sensing System Only)
_____ Flash Code: 2/2

- System overload features are active, and the platform load is too low to be valid – this could be caused by erroneous calibration, a sensor fault, or a change in the vehicle mechanics/ hydraulics.

FUNCTIONS LOCKED - TOO HIGH _____ Flash Code: 2/2

- The platform is raised too high to allow some functions. Certain functions may not be allowed above certain elevations.
- Check operator’s manual or ADJUSTMENTS/HEIGHTS/MAX DRIVE and MAX LIFT to see if drive and/or lift is allowed at all heights.

FUNCTIONS LOCKED - TILTED _____ Flash Code: 2/2

- The vehicle is tilted too much to allow some functions.
- Check operator’s manual or ADJUSTMENTS/TILT/Xtrip and Ytrip, which determine the maximum allowed vehicle tilt.
- Refer to EZ-Cal Flow Chart 1 – Adjustments and Setup.

FUNCTIONS LOCKED - EXTERNAL SHUTDOWN _____ Flash Code: 2/2

- An external shutdown is preventing functions – check DIAGNOSTICS/SYSTEM/ MODE/ INTERLOCK to see which external interlock is active.

CHECK GROUND INPUT SWITCHES! _____ Flash Code: 2/2

- There is a problem with the ground function select switches – more than one is active at the same time.

SELECT DRIVE/LIFT MODE! _____ Flash Code: 2/2
- There is a problem with the platform drive/lift select switch – neither mode is selected.

CHECK DRIVE/LIFT SELECT SWITCH!_____ Flash Code: 2/2
- There is a problem with the platform drive/lift select switch – both modes are selected together.

CHECK JOYSTICK SWITCHES! _____ Flash Code: 2/2
- There is a problem with the platform joystick switches – both directions are selected together.

RELEASE TRIGGER! _____ Flash Code: 2/2
- The trigger was closed at power-on, or closed for too long with no function selected.

Release Ground Switches! _____ Flash Code: 2/2
- Ground function switches were closed at power-on.

RELEASE JOYSTICK SWITCHES! _____ Flash Code: 2/2
- Platform joystick switches were closed at power-on, or closed for too long without trigger switch (see SETUPS/INTERLOCKS/TRIGGERwait).

RELEASE OUTRIGGER SWITCHES! _____ Flash Code: 2/2
- Outrigger switches were closed at power-on.

Wiring Messages

The following are “wiring” HELP messages – problems have been detected which are likely due to vehicle wiring issues:

FAULT: ENERGIZED VALVE - CHECK P5 WIRING! _____ Flash Code: 3/2
FAULT: VALVE FEEDBACK HIGH - CHECK VALVE WIRING! ____ Flash Code: 3/2
- There is a voltage on one or more valve outputs, when all outputs are off.
- Check each valve output to trace where the invalid supply is coming from.

FAULT: CAPBANK VOLTAGE TOO HIGH - CHECK LINE CONT!__ Flash Code: 3/3
- The voltage on the B+ stud of the controller (connected to an internal voltage stabilization capacitor bank) is too high when the line contactor is off. B+ stud voltage should be approximately 32 volts at idle.
- Check the line contactor tips are not welded, and check the power wiring for errors.

FAULT: ENERGIZED LINE CONTACTOR - CHECK P5 WIRING! __ Flash Code: 3/4
- There is a voltage on the line contactor coil output, when it is off.
- Check wiring to the line contactor coil to trace where the invalid supply is coming from.

FAULT: MOTOR OVERLOAD!_____ Flash Code: 3/5
- The power protection circuits in the controller have activated to protect from extreme overload.
- Check for short-circuit power wiring; check for a seized or shorted motor.

Supply Messages

The following are “supply” HELP messages – problems have been detected which are likely due to supply issues:

FAULT: LOW OIL PRESSURE! _____ Flash Code: 4/1
- Engine oil pressure switch open after start sequence initiated or engine stalled or unable to start.

FAULT: BAD INTERNAL 5V! _____ Flash Code: 4/2
- The internal “5V slave” supply is out of range; if the fault remains, the controller may have to be replaced.

FAULT: BAD INTERNAL SLAVE! _____ Flash Code: 4/2
- The internal “slave” is not operating correctly; if the fault remains, the controller may have to be replaced.

FAULT: BAD INTERNAL 12V! _____ Flash Code: 4/3
- The internal “12V” supply is out of range;
- 12V Supply is generated by the Motor control module and supplied to the GP400. Check for wiring errors between the two modules. If the fault remains, the Motor Controller may have to be replaced.

FAULT: BATTERY VOLTAGE TOO LOW! _____ Flash Code: 4/4
- The battery supply is too low – the batteries must be re-charged.

FAULT: BATTERY VOLTAGE TOO HIGH! _____ Flash Code: 4/4
- The battery supply is too high – check that the correct battery and charger are installed.

FAULT: BAD 5V SENSOR SUPPLY - CHECK P2-1 WIRING! _____ Flash Code: 4/5
- The “5V sensor” supply is out of range; this supply is available to power external 5V-powered sensors – check that is has not been overloaded or short-circuited to other wiring (Optional Load Sensing System only).

Sensor Messages - Optional Load Sensing System

The following are “sensor” HELP messages – problems have been detected which are likely due to sensor issues (optional Load Sensing System).

FAULT: CHECK HEIGHT1 SENSOR _____ Flash Code: 6/1
FAULT: CHECK HEIGHT2 SENSOR _____ Flash Code: 6/1
- A height sensor is giving an out-of-range voltage (below 0.5V or above 4.5V).

FAULT: CHECK HEIGHT SENSORS _____ Flash Code: 6/1
- When two height sensors are fitted, both should read the same height at all times; this message indicates that the sensors are reading different heights. Check for loose sensors and/or re-calibrate.

FAULT: CHECK PRESSURE SENSOR _____ Flash Code: 6/2
- A pressure sensor is giving an out-of-range voltage (below 0.5V or above 4.5V).

FAULT: CHECK ELEVATION SWITCH_____ Flash Code: 6/3
- The elevation switch is in disagreement with the height sensor(s).
- During calibration, the height at which the elevation switch opens (while lifting) and closes (while lowering), is recorded. Subsequently, height and these calibration points are continuously checked – any significant difference generates this error.

CANBUS Messages

This section lists “CANBUS” HELP messages – problems have been detected with CANBUS communications between different modules (of course, only applicable if more than one module is connected together via CANBUS):

FAULT: CANBUS! _____ Flash Code: 6/6

- There are problems with CANBUS communications between the different modules; messages expected from one or more module are not being received, or messages intended to one or more module cannot be transmitted.
- Check for open- and short- circuit problems with CANBUS wiring; ensure that the CANBUS is wired correctly pin-to-pin; ensure that the vehicle chassis is not erroneously shorted to the chassis (for example, due to insulator breakdown in the motor).

Power Wiring Messages

The following are “power wiring” HELP messages – problems have been detected which are likely due to power wiring errors:

FAULT: CAPBANK VOLTAGE TOO LOW - CHECK STUD WIRING! Flash Code: 7/7

- The voltage on the B+ stud of the controller (connected to an internal voltage stabilization capacitor bank) is too low when the line contactor is off (a pre-charge circuit in the module normally applies approximately 32 volts to the capacitor bank).
- Check the 300 amp fuse, line contactor or power wiring for errors. Also check DC motor for internal grounding.

Other Messages

The following are other HELP messages:

SOME BIG BAD PROBLEM! _____ Flash Code: 9/9

- This message should not occur!

FACTORY OVERRIDE _____Flash Code: (fast flashing)

- When the controller is first shipped, prior to initial calibration, it is configured in a special “factory override” state. In this state, none of the normal shutdowns or interlocks will occur – the vehicle can be freely lifted/lowered and driven irrespective of any calibration needs, vehicle tilt, etc.
- As soon as an EZ-Cal is connected to the controller, the factory override state is ended.
- If calibration does not occur, then the factory override state will recur if the EZ-Cal is disconnected and power is switched off/on.

IMPORTANT: Never use a vehicle in factory override; this state is ONLY intended for use during manufacture! While factory override is active, the LED is rapidly flashed on/off.

Hydraulic Schematics

The following table applies to Figure 5-1 through Figure 5-7. Not all callouts are used on every drawing.

Callout	Description
Callout	Description
BR1 - BR4	Brake, Integral to the torque hubs
C1	Valve, Drive directional
C2	Valve, Drive directional
CBV1, CBV2	Counterbalance Valve, Lift cylinder hold
CBV3, CBV4	Counterbalance Valve, Axle lock cylinders
CYL1	Cylinder, Hydraulic lift
CYL2	Cylinder, Hydraulic lift
CYL3, CYL4	Cylinder, Steer
CYL5, CYL6	Cylinder, Axle lock
CYL7 - CYL10	Cylinder, Outrigger
EPFR1	Flow Regulator, Diverts unused oil to tank
FD1 - FD3	Flow Divide Valve, drive traction control
FL1	Filter, Hydraulic oil return
FL2	Filter, Charge pump
HS1	Oil Shuttle Valve
LS1	Check Valve, Drive signal for Axle Lock
MA1	Manifold, Main
MA2	Manifold, axle lock, 2-speed, brake
MA3	Manifold, Drive
MT1 - MT4	Wheel Drive Motor
ORBV1 - ORBV4	Outrigger Blocking Valve, O/R control
ORF1	Orifice, Flow regulator control
ORF2	Orifice, Lower max speed control
ORF3	Orifice, Steer max speed control
ORF4	Orifice, Brake apply control
ORF5	Orifice, 2-speed shift control
ORF6 - ORF8	Orifice, Drive flow-divide bypass
ORF 9	Orifice, Drive Manifold
P1	Pump, Drive hydrastatic
P2	Pump, Lift, steer and outriggers
P3	Pump, Emerg power unit
PD1	Pilot-Operated Valve
PD2	Pilot-Operated Valve
RV1	Relief Valve, Lift, Lower max pressure
RV2	Relief Valve, Outrigger, steer max pressure
RV3	Relief Valve, Drive Manifold
RV4-RV5	Relief Valve, Lift Cylinder
SP1	Proportional Valve, Speed control
SV1	Solenoid Valve 5-way, 3 pos, Steer directional
SV2	Solenoid Valve 2-way, 2 pos, Axle Lock
SV3	Solenoid Valve 2-way, 2 pos, 2-speed shift
SV4	Solenoid Valve 2-way, 2 pos, Brake release
SV5-SV6	Solenoid Valve, Lift Cylinder
SVD1	Solenoid Valve 4-way, 3 pos, Lift, Lower
SVD2	Solenoid Valve 4-way, 3 pos, Outrigger directional

Hydraulic Schematic, 5492RT

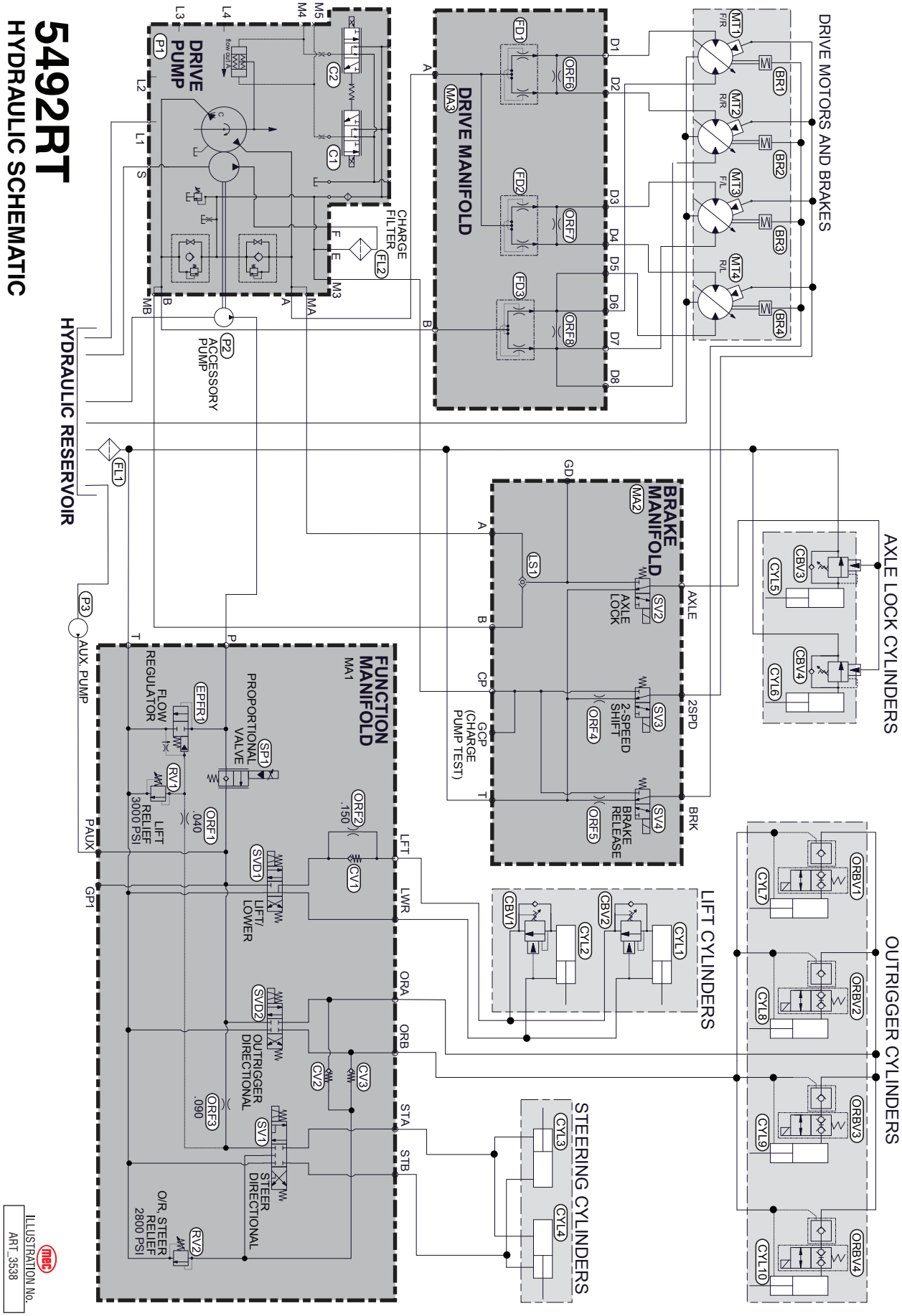

Hydraulic Schematic, 3392RT-T ~#13600044

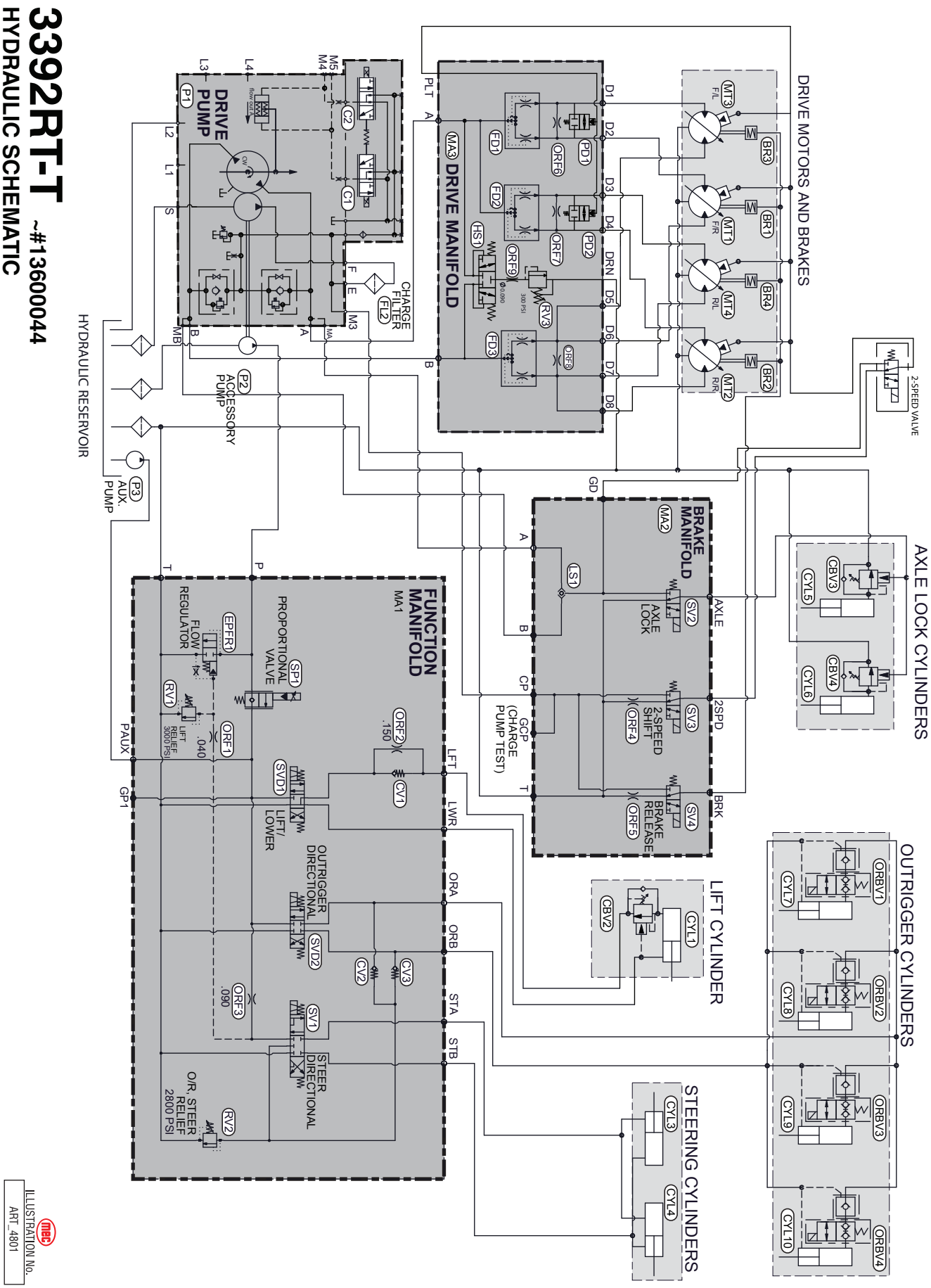

Hydraulic Schematic, 3392RT-T #13600045~

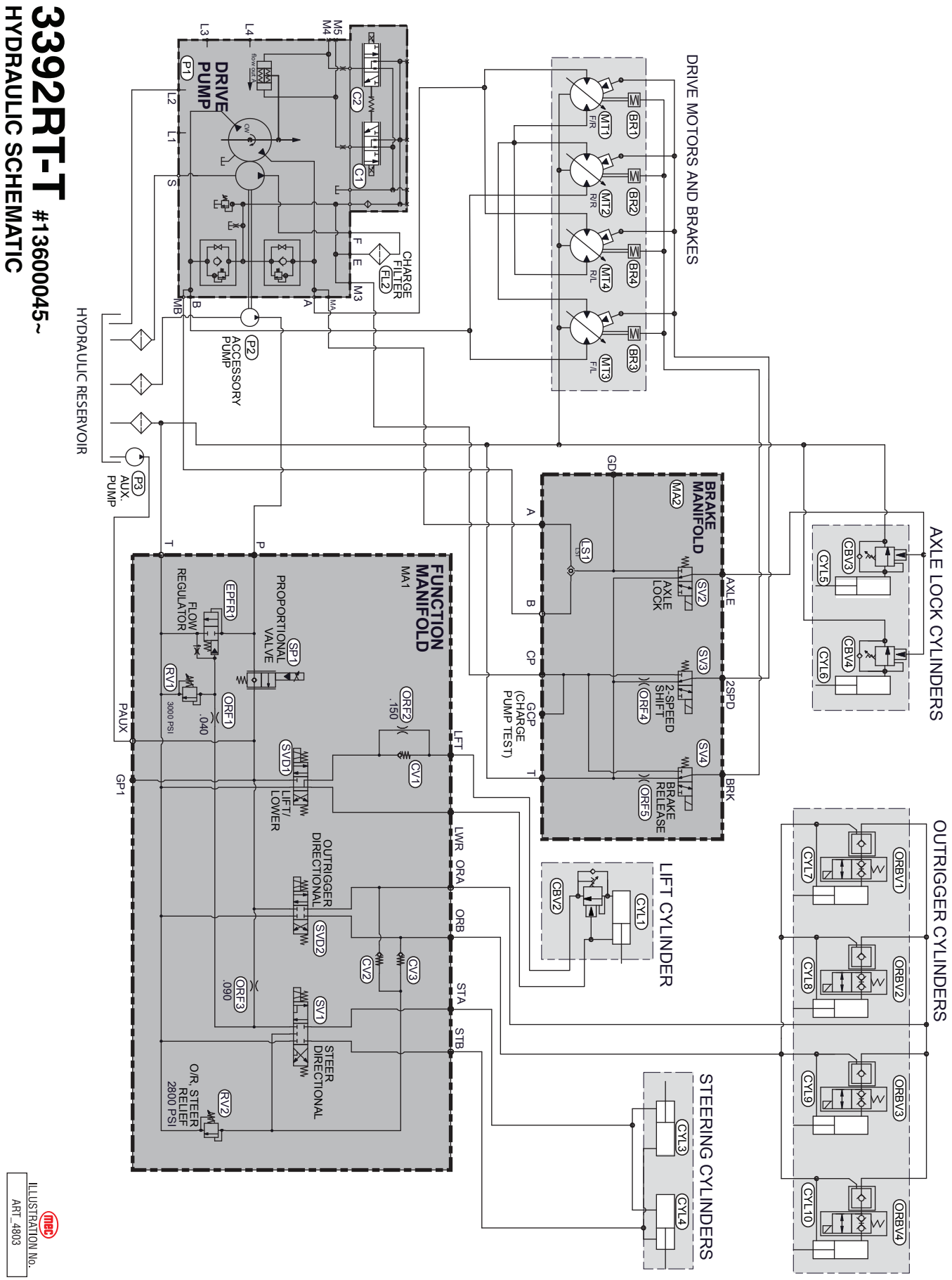

Hydraulic Schematic, 6092RT

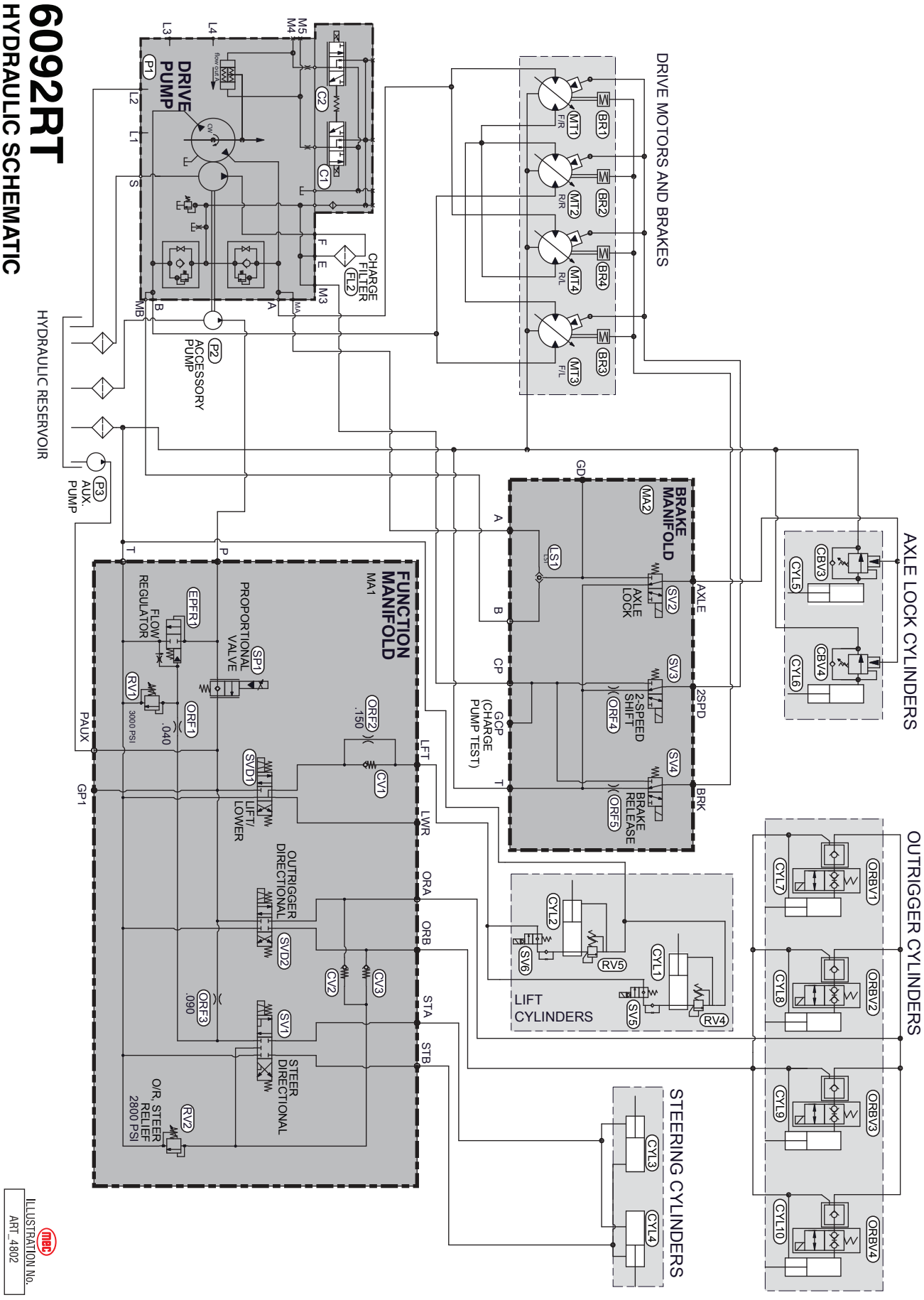

Function Manifold, MA1

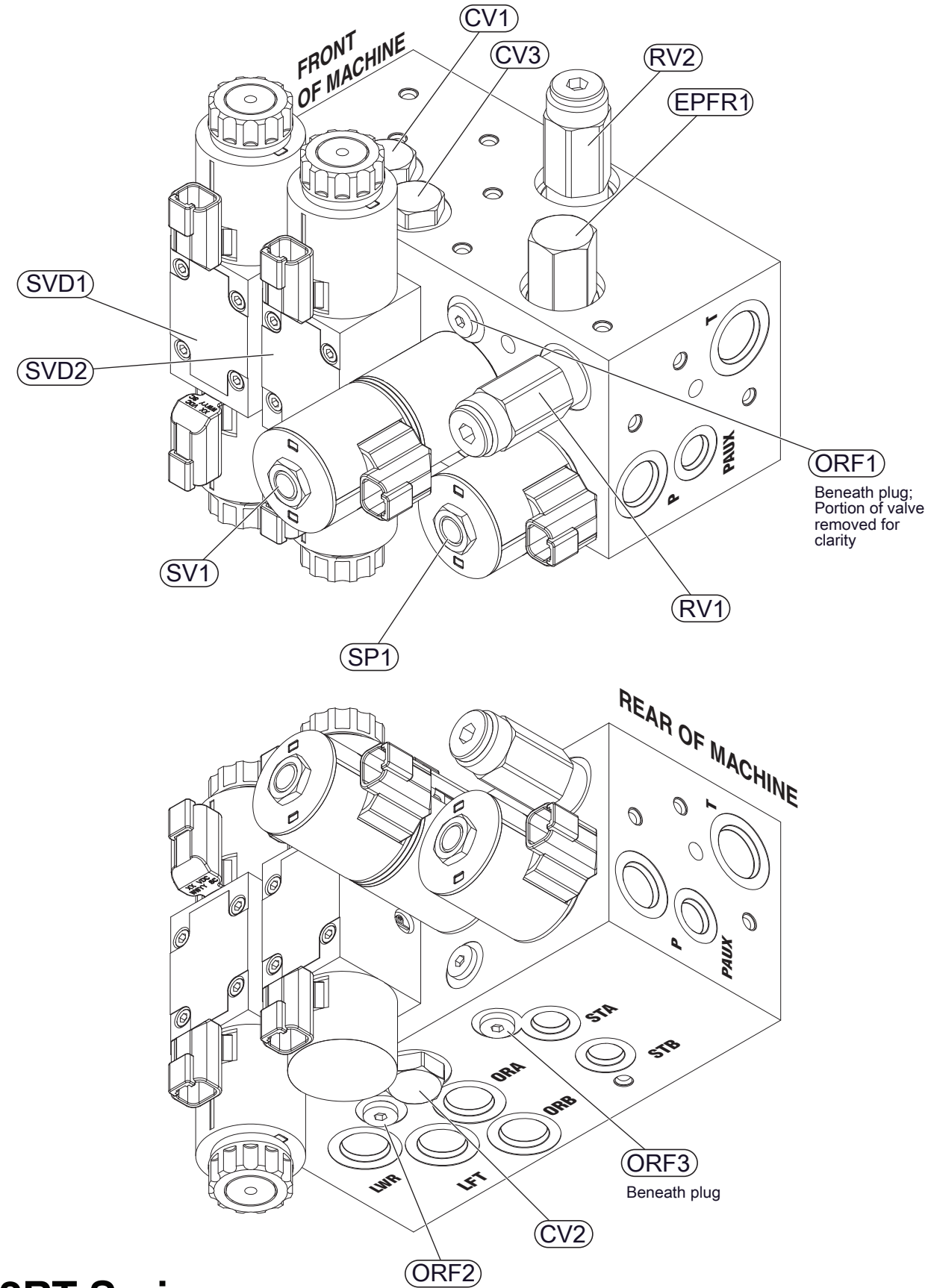

92RT Series
FUNCTIONS MANIFOLD
MA1

ILLUSTRATION No.
ART_3539

Brake Manifold, MA2

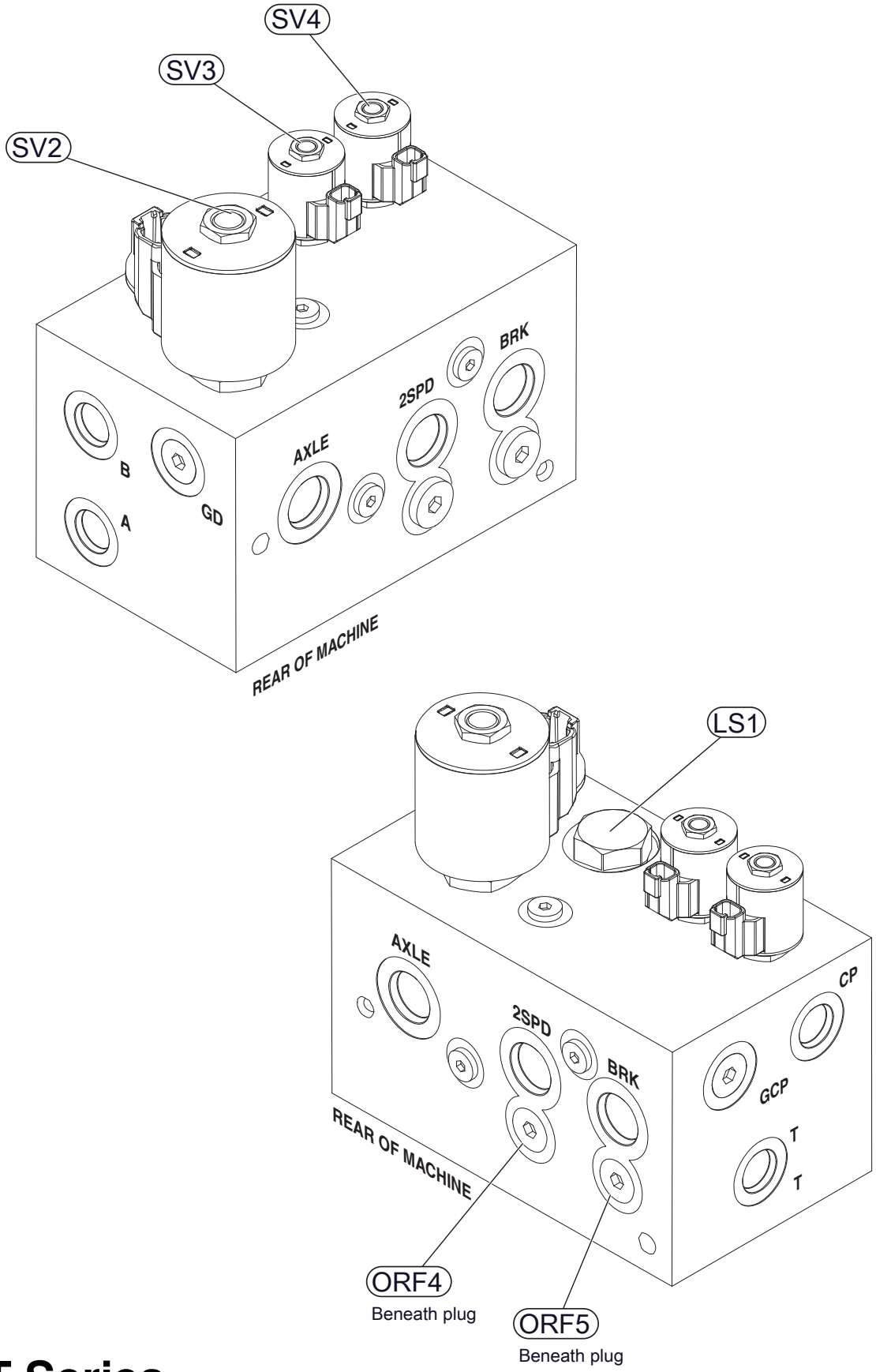

92RT Series

BRAKE MANIFOLD
MA2

ILLUSTRATION No.
ART_3540

Drive Manifold, MA3

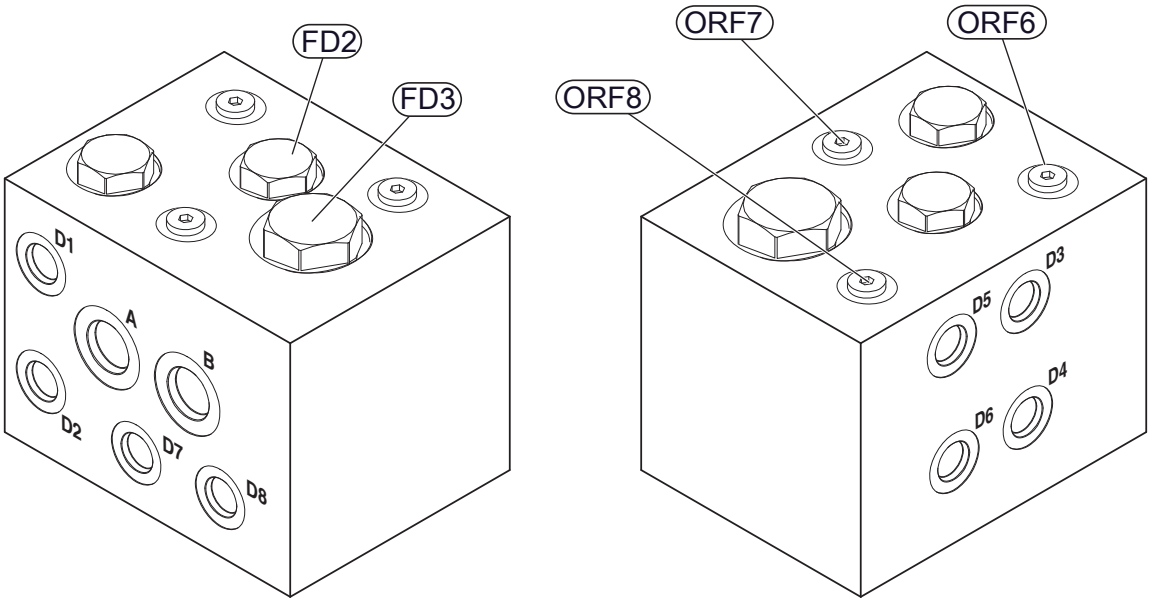

5492RT

3392RT-T

~#13600044

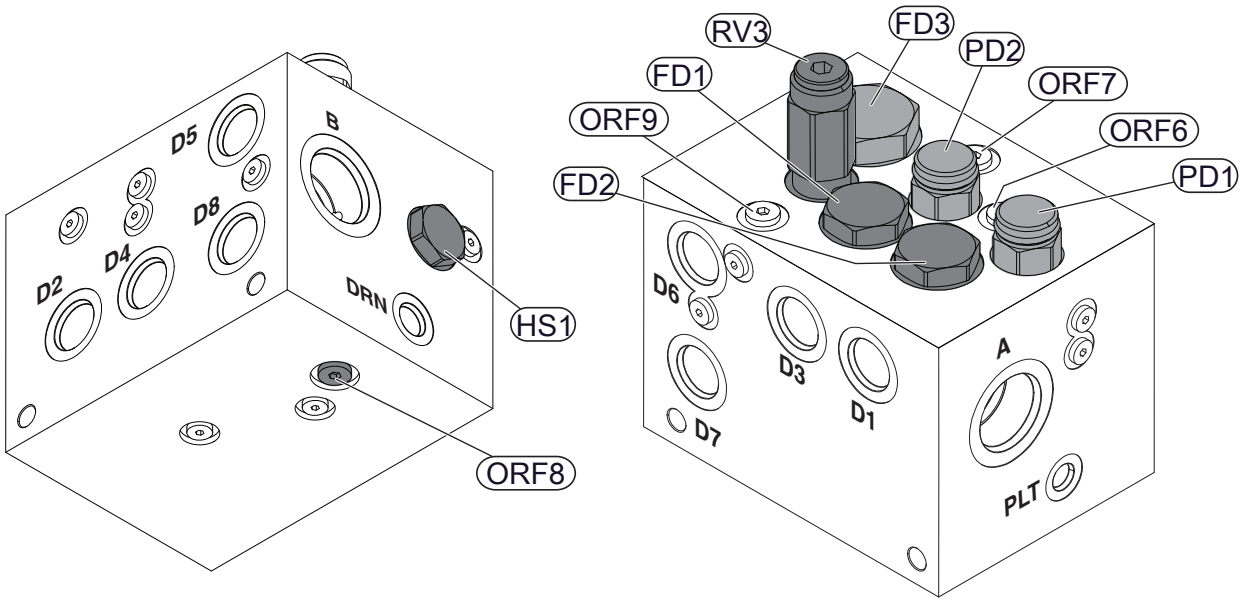

DRIVE MANIFOLD
MA3
Not used on later 3392RT-T or 6092RT models

ILLUSTRATION No.
ART_3541

Electric Schematic, 5492RT, 1 of 3

SCHEMATIC	
Model: / Serial #	
5492RT | 11900001- UP	
Lower Controls	
Reference Art #: 17682	Publication Art #: ART_3542

5492RT
1 of 3

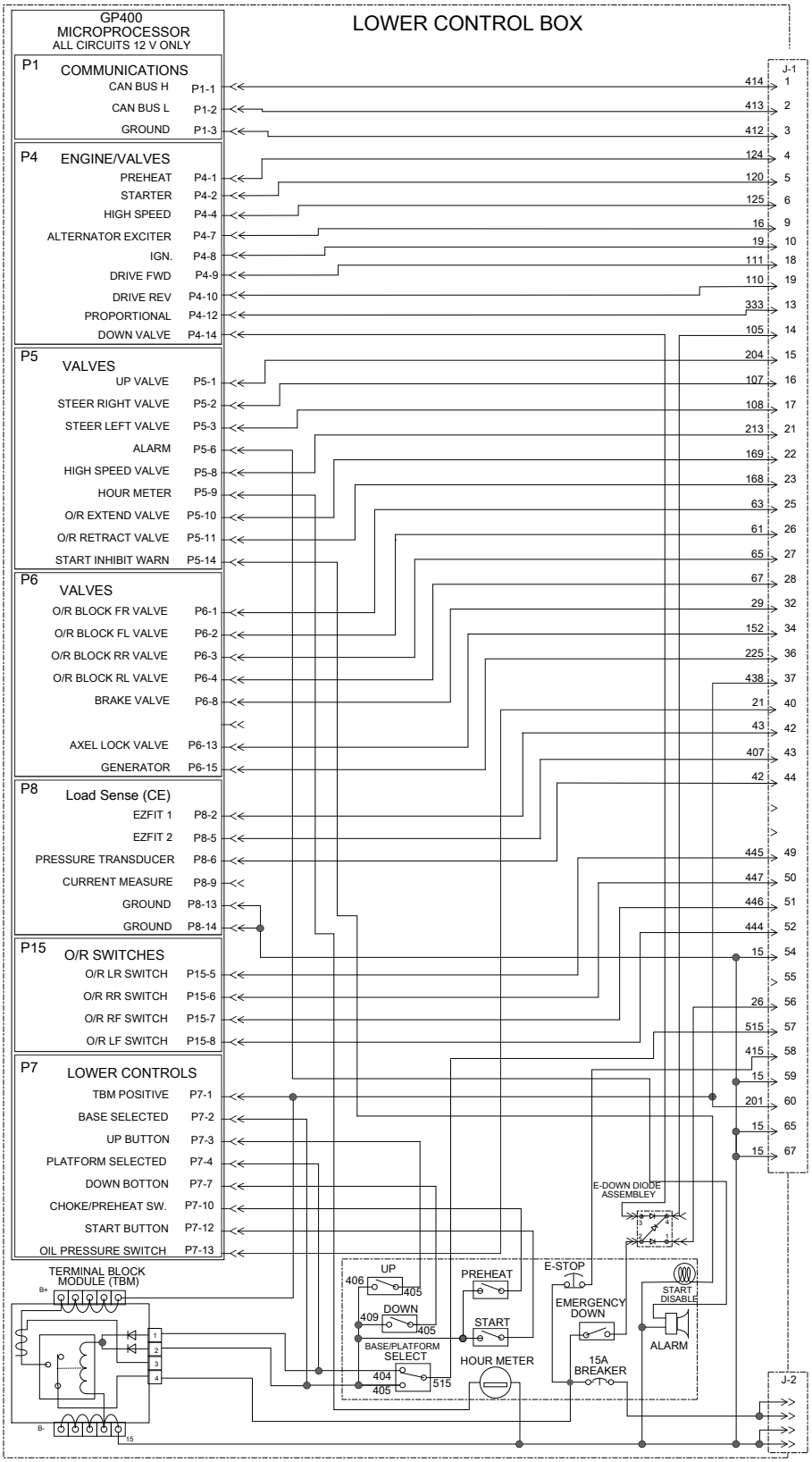

Electric Schematic, 5492RT, 2 of 3

SCHEMATIC
Model: / Serial #
5492RT | 11900001- UP
Chassis
Reference Art #: 17682 | Publication Art #: ART_3543

5492RT 2 of 3

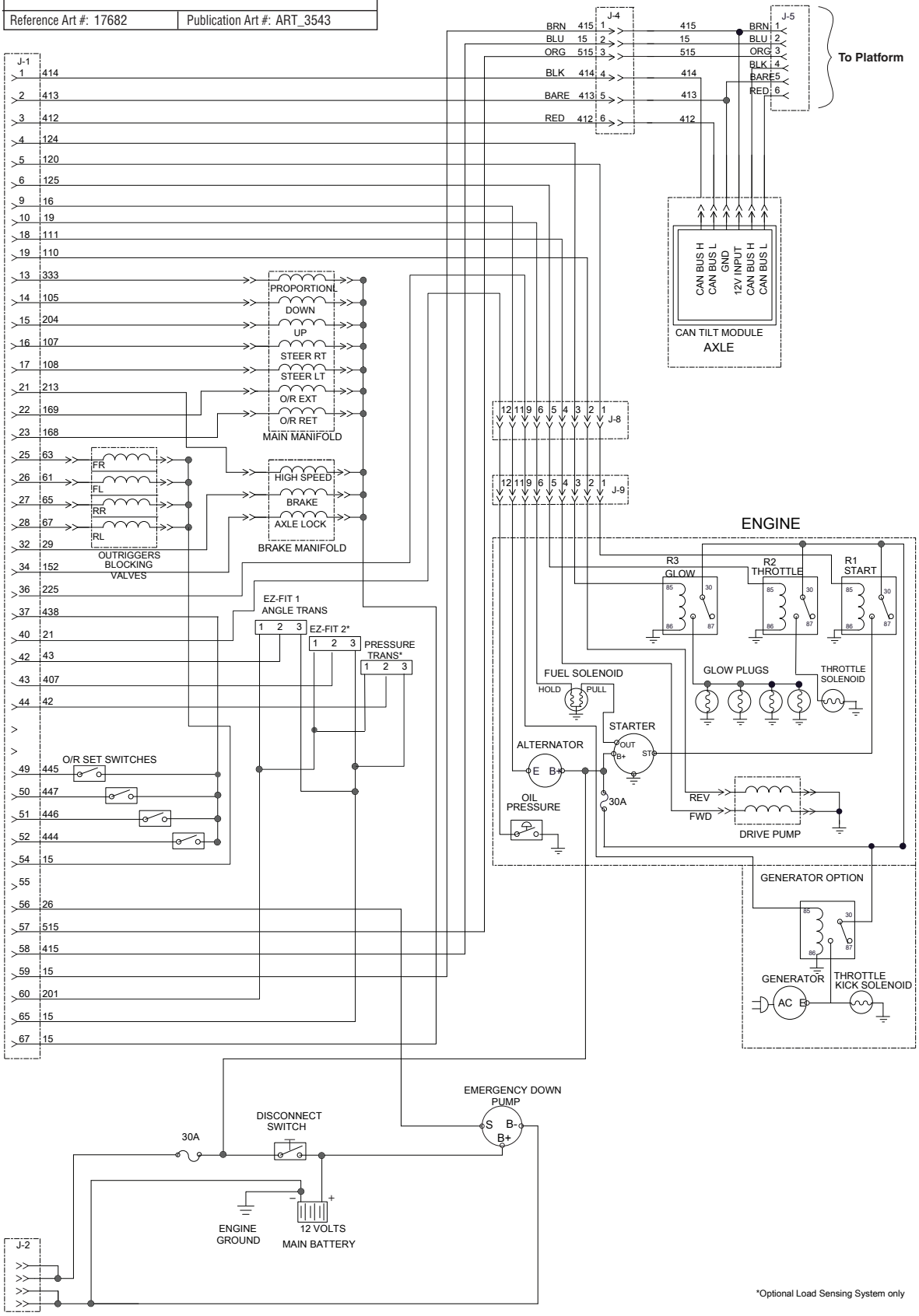

Electric Schematic, 5492RT, 3 of 3

SCHEMATIC	
Model: / Serial #	
5492RT | 11900001- UP	
Upper Controls	
Reference Art #: 17682	Publication Art #: ART_3544

5492RT
3 of 3

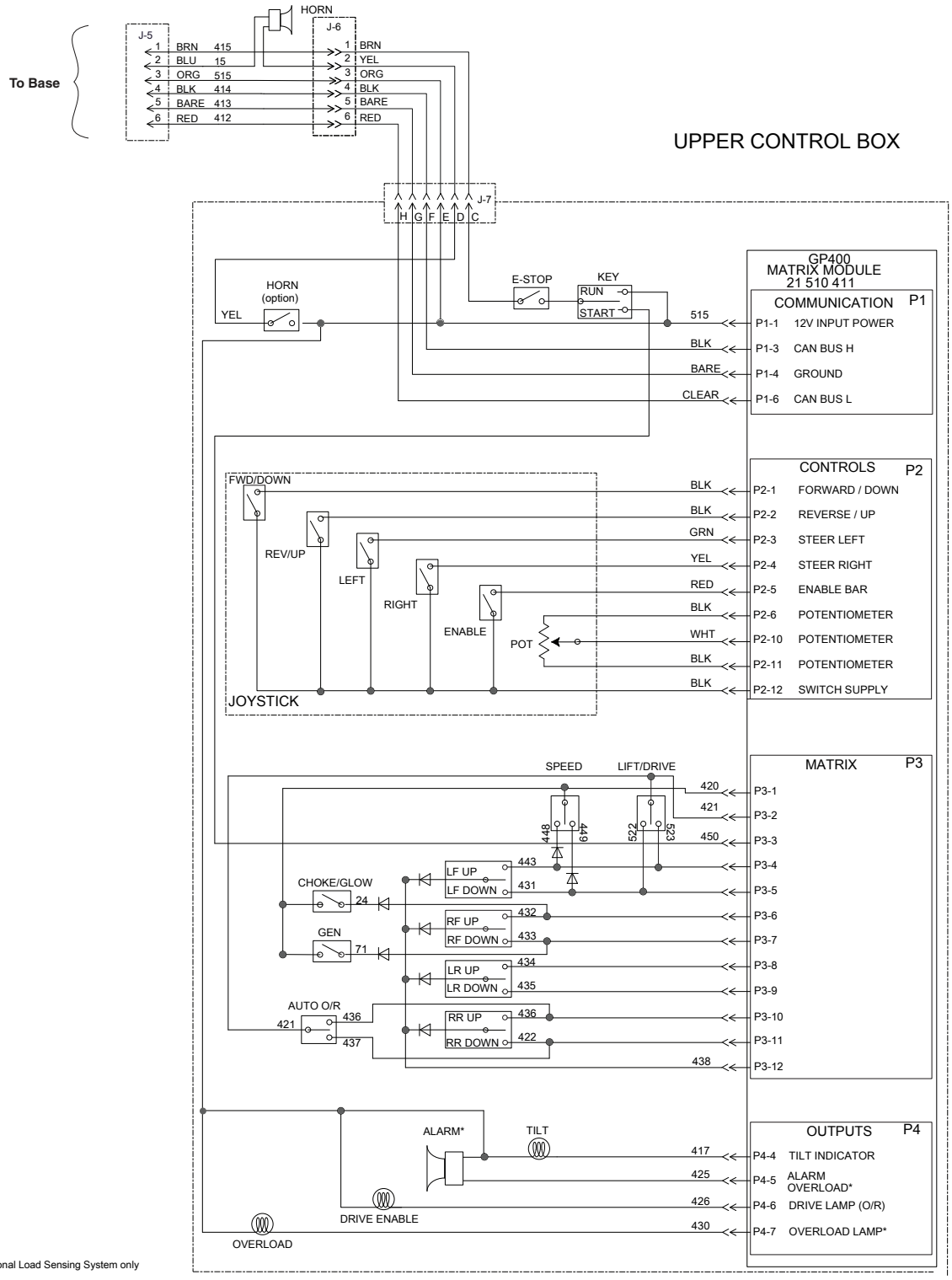

*Optional Load Sensing System only

Electric Schematic, 3392RT-T, 1 of 3

SCHEMATIC	
Model: / Serial #	
3392RT-T | 13600001- UP	
Lower Controls	
Reference Art #: 17578	Publication Art #: ART_4804

3392RT-T 1 of 3

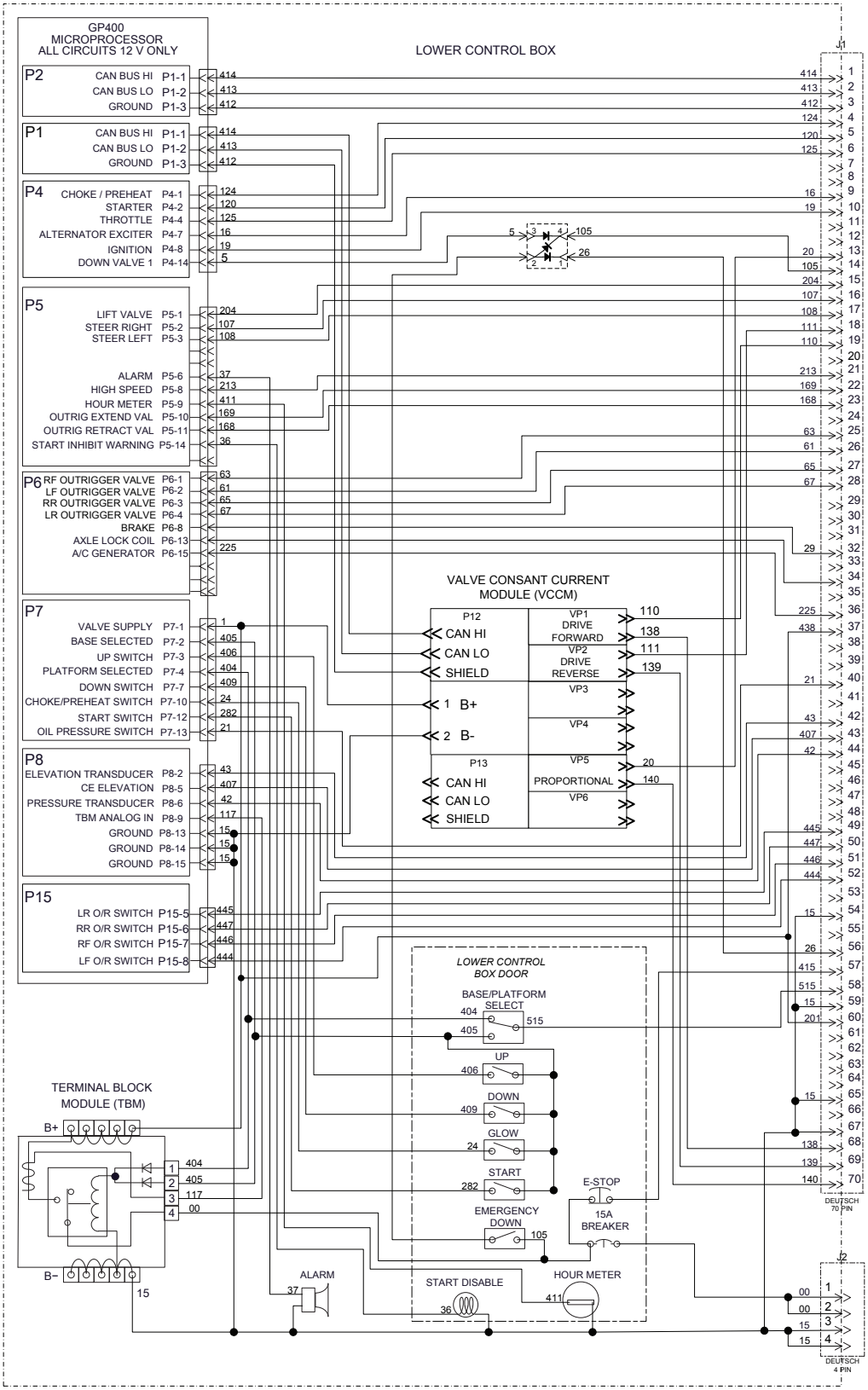

Electric Schematic, 3392RT-T, 2 of 3

SCHEMATIC	
Model: / Serial # 3392RT-T | 13600001- UP	
Chassis	
Reference Art #: 17578	Publication Art #: ART_4805

3392RT-T 2 of 3

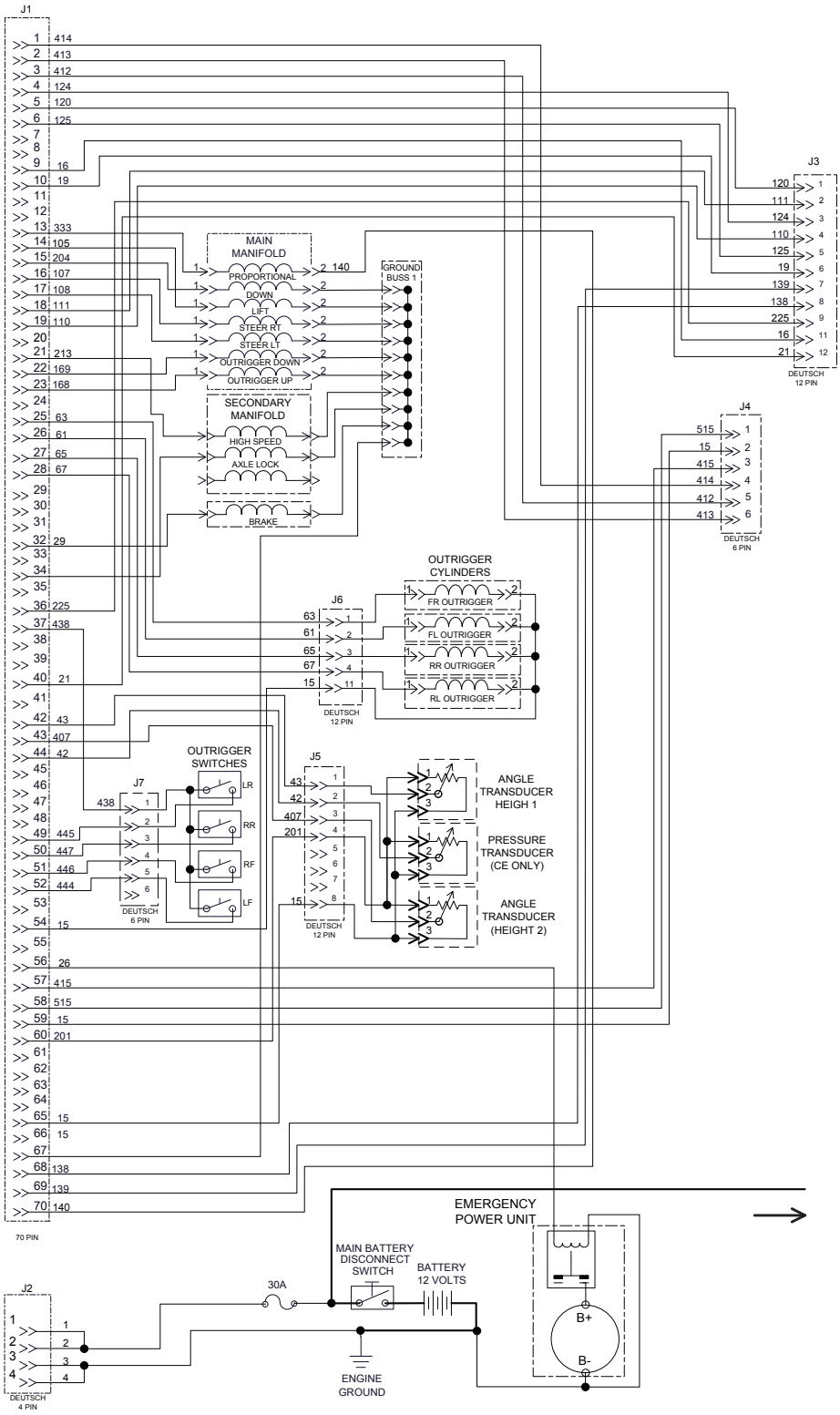

Electric Schematic, 3392RT-T, 3 of 3

SCHEMATIC	
Model: / Serial #	
3392RT-T | 13600001- UP	
Upper Controls	
Reference Art #: 17578	Publication Art #: ART_4806

3392RT-T
3 of 3

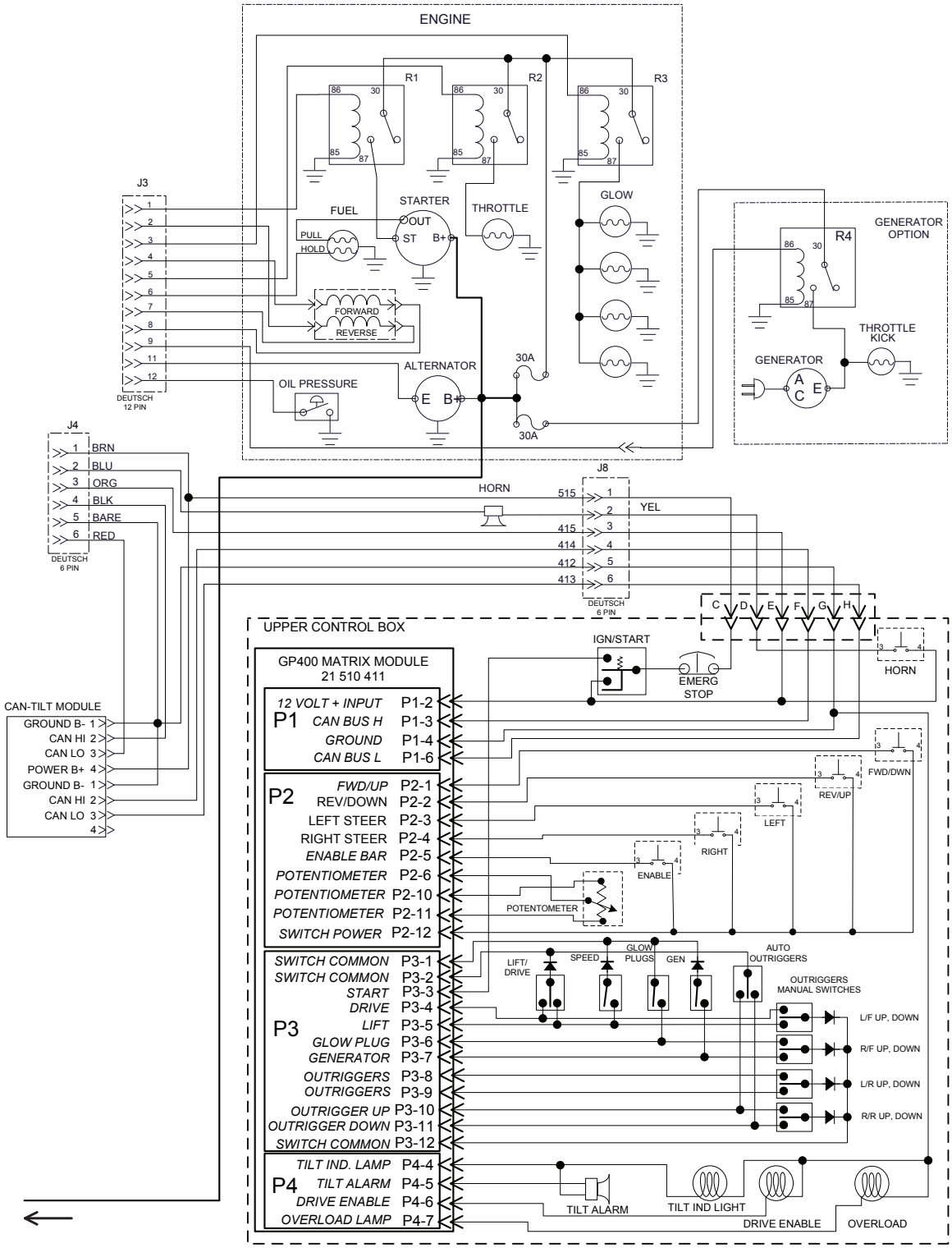

Electric Schematic, 6092RT, 1 of 3

SCHEMATIC	
Model: / Serial # 6092RT-T | 12900001- UP	
Lower Controls	
Reference Art #: 17577	Publication Art #: ART_4807

6092RT
1 of 3

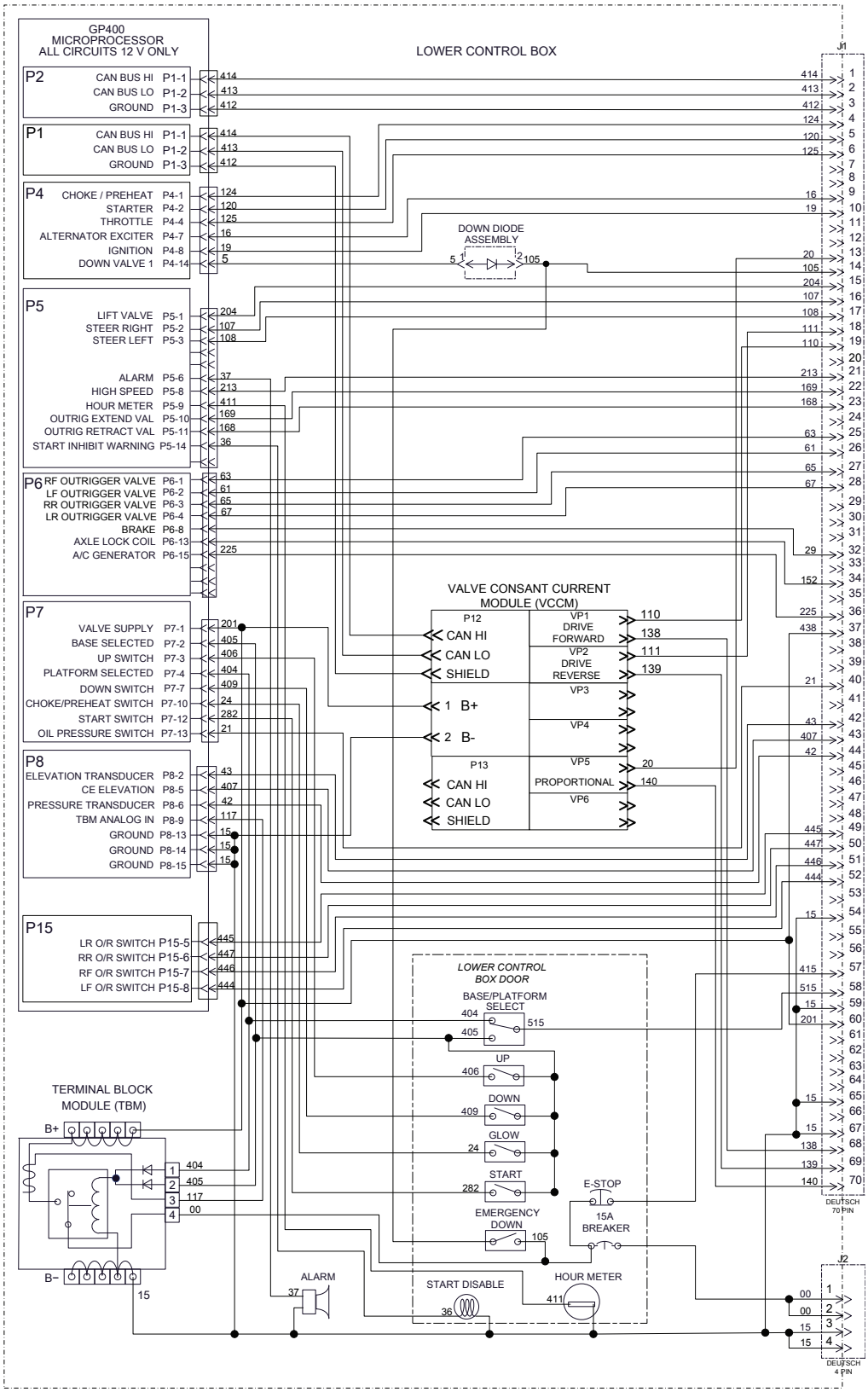

Electric Schematic, 6092RT, 2 of 3

SCHEMATIC	
Model: / Serial #	
6092RT | 12900001- UP	
Chassis	
Reference Art #: 17577	Publication Art #: ART_4808

6092RT
2 of 3

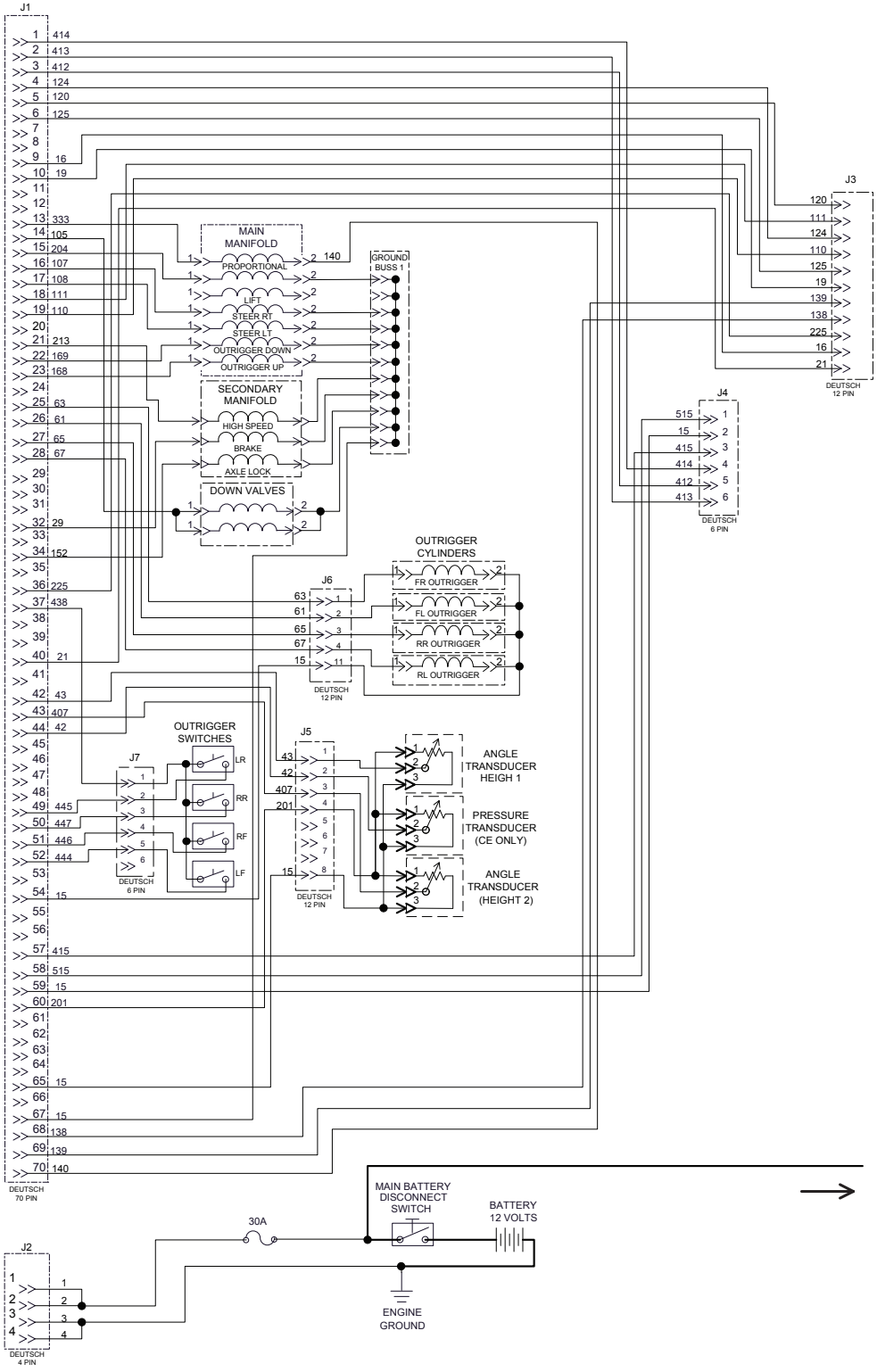

Electric Schematic, 6092RT, 3 of 3

SCHEMATIC	
Model: / Serial #	
6092RT | 12900001- UP	
Upper Controls	
Reference Art #: 17577	Publication Art #: ART_4809

6092RT
3 of 3

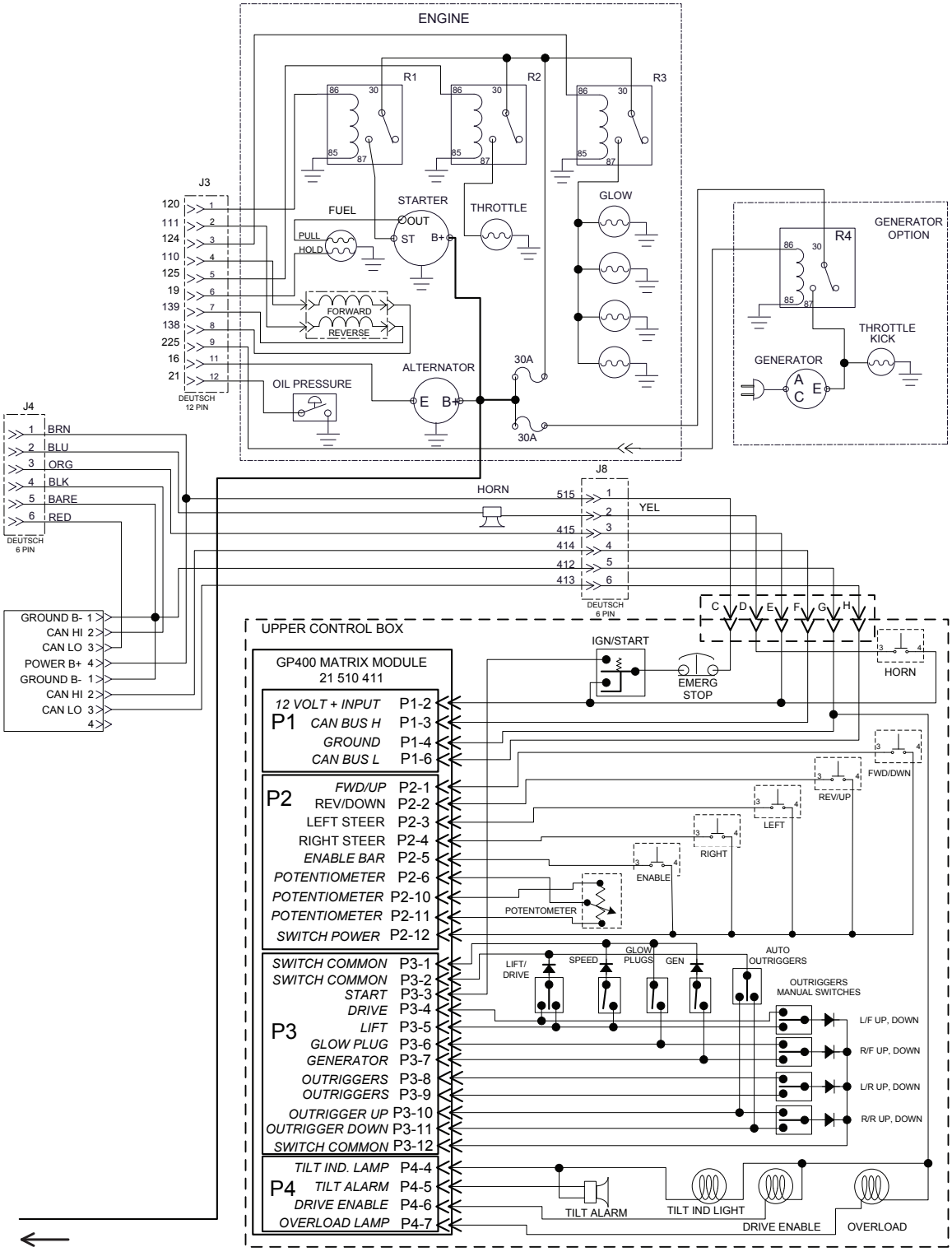

Upper Controls Components

92RT Series ANSI

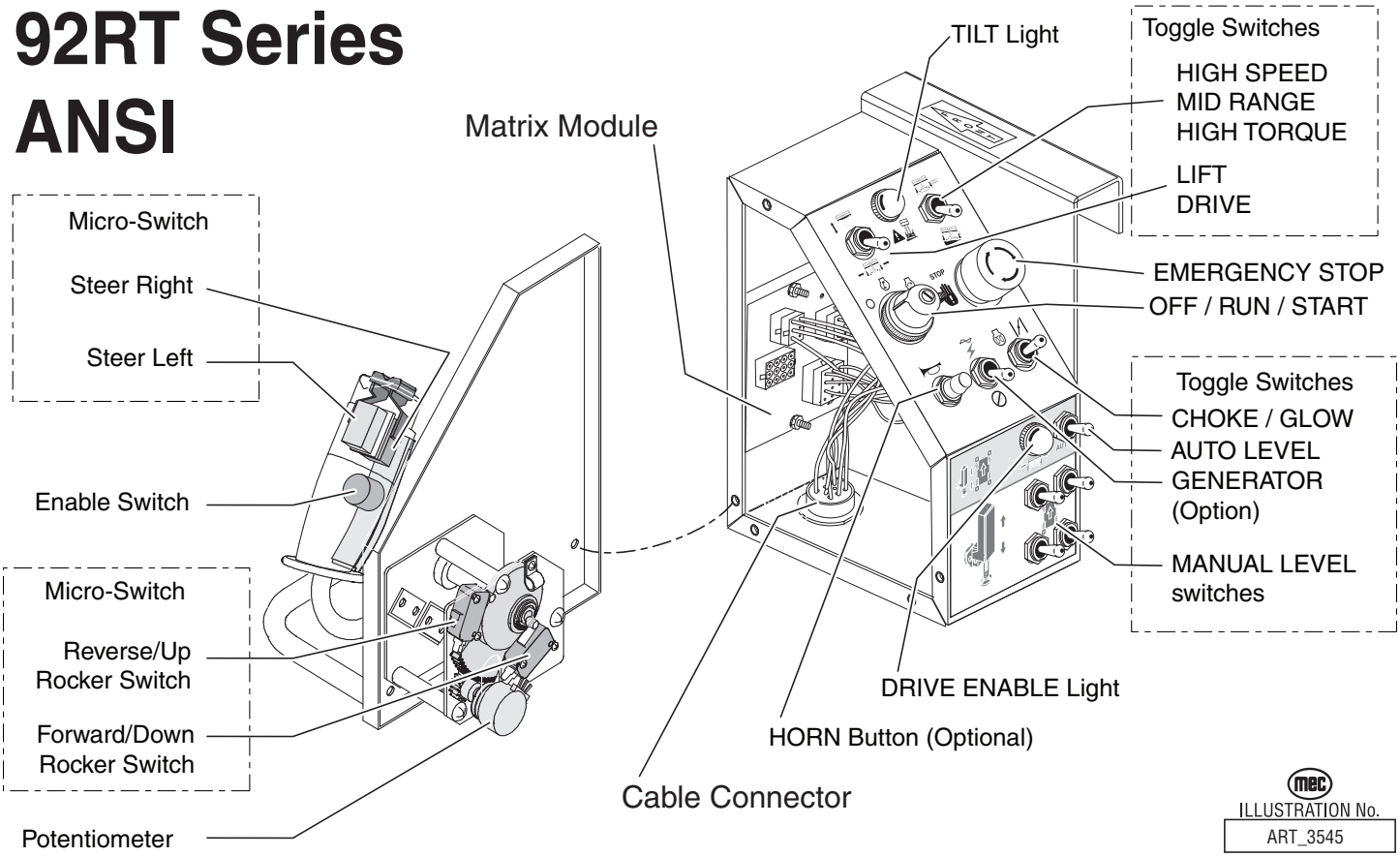

ILLUSTRATION No. ART_3545

92RT Series

Optional Load Sensing System

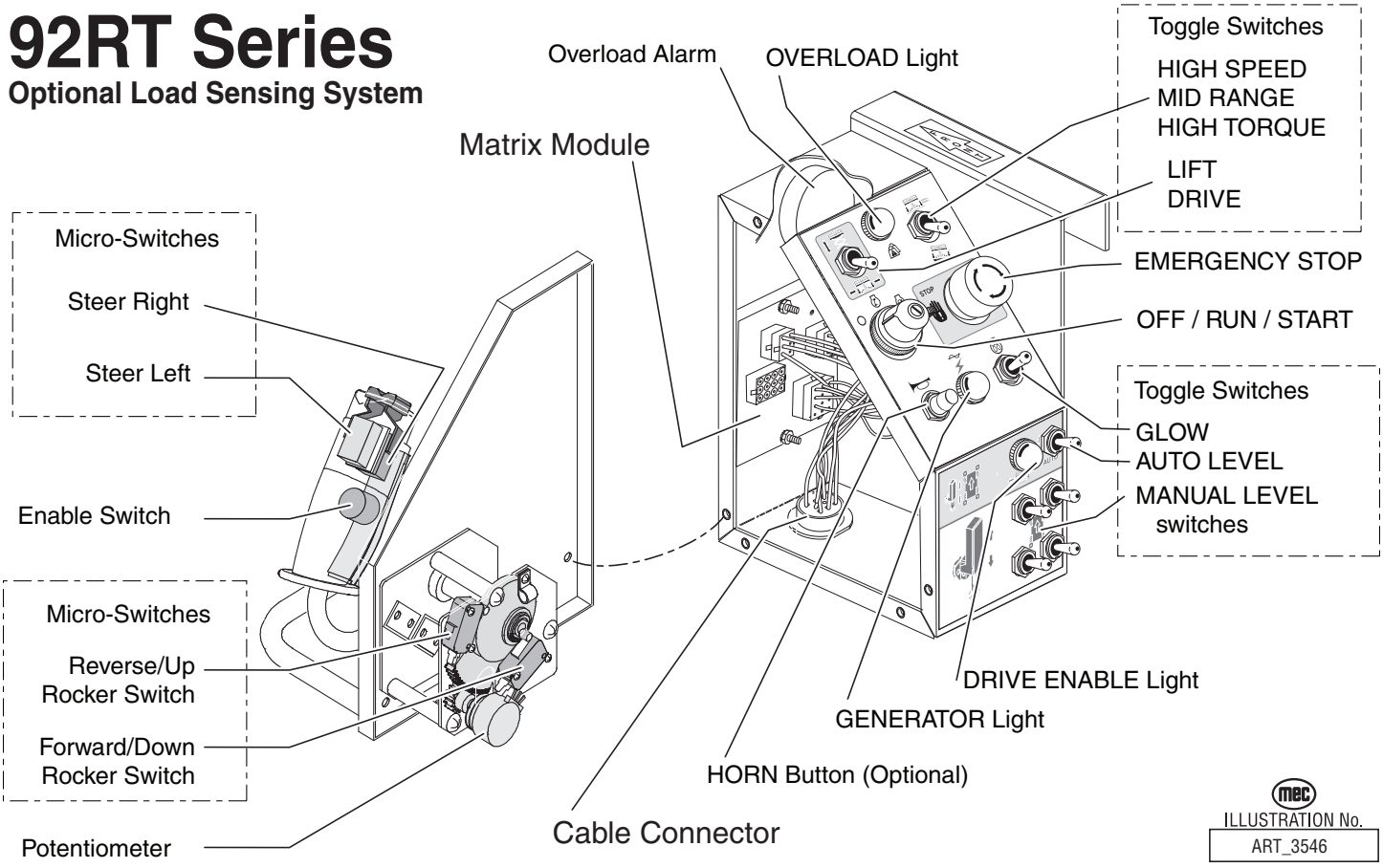

ILLUSTRATION No. ART_3546

Lower Controls Components

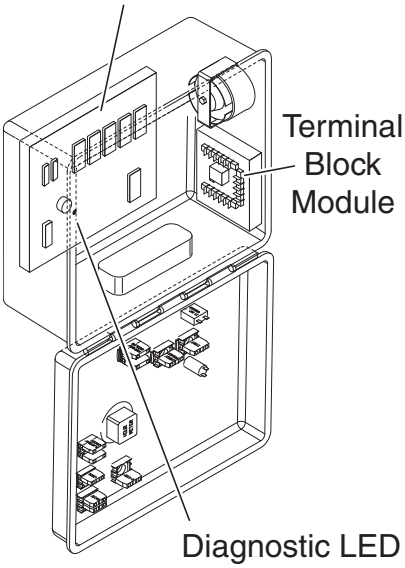

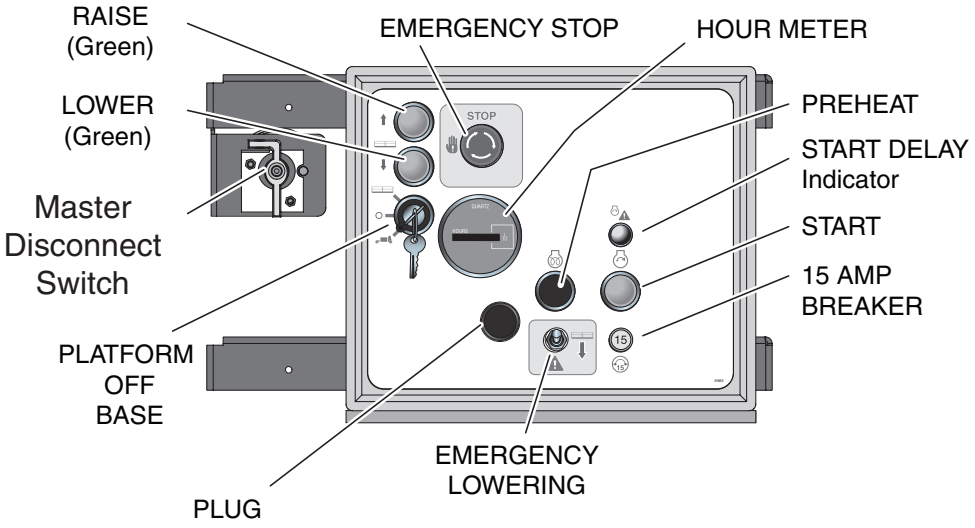

92RT Series

ILLUSTRATION No.
ART_3546

Notes

Parts Introduction

This Parts sections consists of illustrated parts sections and is designed to provide you, the customer, with illustrations and the list of associated parts needed to properly maintain the MEC self-propelled aerial work platform. When used in conjunction with the Service section in this manual and the Operator's Manual (provided separately), this manual will assist you in making necessary adjustments and repairs, and identifying and ordering the correct replacement parts.

All parts represented here are manufactured and supplied in accordance with MEC quality standards.

We recommend that you use genuine MEC parts to ensure proper operation and reliable performance.

To obtain maximum benefits from your MEC Aerial Work Platforms, always follow the proper operating and maintenance procedures. Only trained authorized personnel should be allowed to operate or service this machine. Service personnel should read and study the Operator's, and the Service and Parts Manuals in order to gain a thorough understanding of the unit prior to making any repairs.

Upper Controls

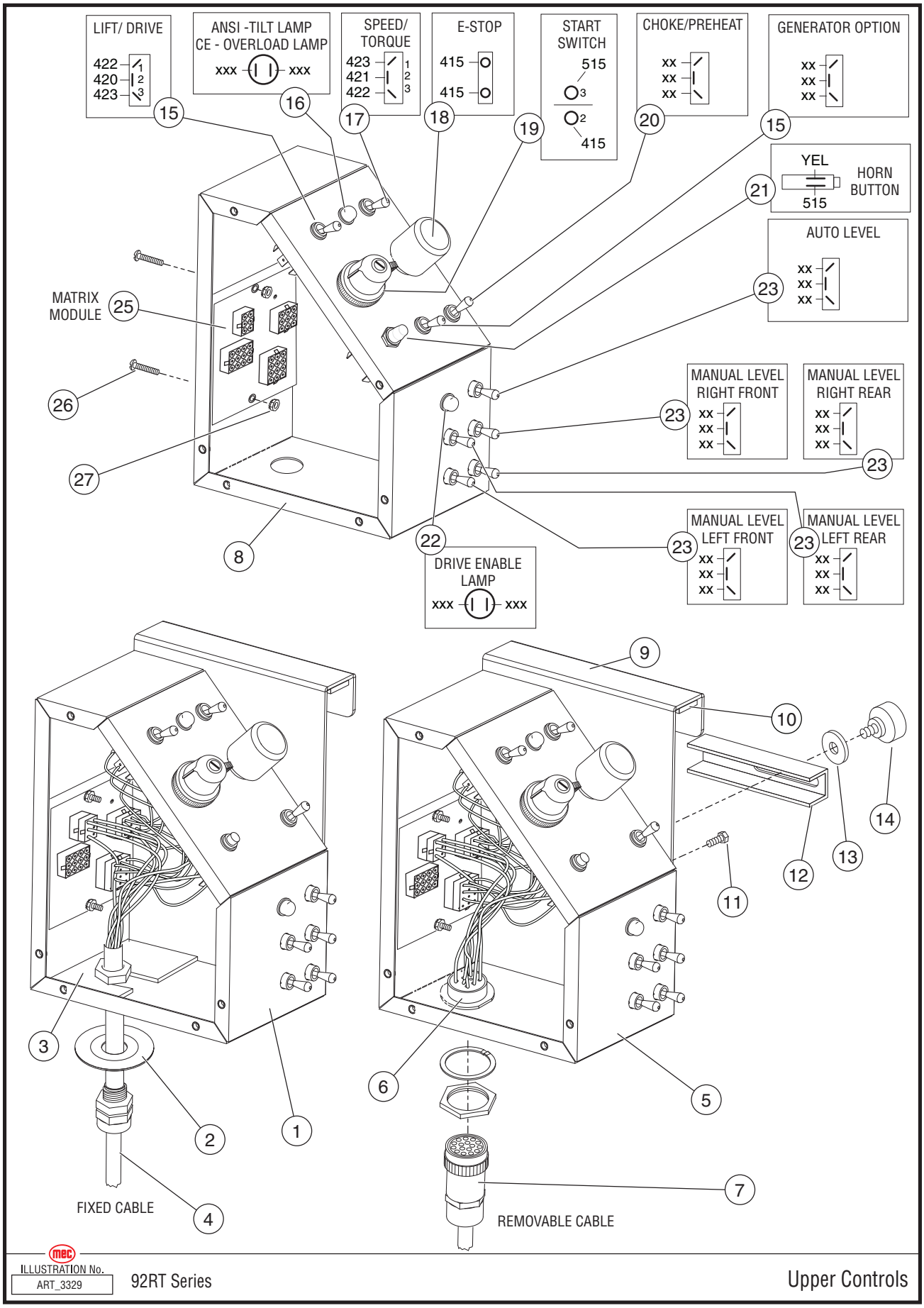

Item	Part Number	Description	Qty.
Fixed Control Box Assembly			
1	83099	Assembly With Fixed Cable	1
2	16079	Strain Relief Washer	1
3	16120	Mounting Plate	1
4	92434	Cable, Fixed (see Wire Harness, Section 20 - Base)	1
Removable Control Box Assembly			
5	83100	Assembly With Removable Cable	1
6	REF	Harness, Removable (see Wire Harness, Section 20 - Base)	1
7	91780	Cable, Removable (see Wire Harness, Section 20 - Base)	1
All Models			
8	16242	Weldment, Control Box	1
9	13865	Bracket, Control Box Holder	1
10	6350	Tape, Foam	.5 ft
11	50109	Screw, 5/16–18	1
12	13864	Bracket, Control Box Holder	1
13	50234	Washer, 5/16 Fender	1
14	8826	Thumb Screw, 5/16–18, Flower	1
15	6234	Switch, Toggle, Lft/Drive	1
16	9184	Lens, Amber	1
	9188	Light, Bayonet, 14 Volt	1
	9179	Socket, Indicator Light	1
17	6905	Switch, Toggle, Speed/Torque	1
18	7800	Switch, Emergency Stop	1
19	91619	Switch, Start	1
20	5630	Switch, 2-Position Momentary Single Pole	1
21	8044	Switch, Button (Horn option)	1
22	--	Lens, Green	1
	9188	Light, Bayonet, 14 Volt	1
	9179	Socket, Indicator Light	1
23	91954	Switch, 3-Position Momentary	5
24	--	--	--
25	91663	Matrix Module	1
26	50229	Screw, 10-24 x 1.00	2
27	50230	Nut, 10-24 Nylock	2
--	88036	Control Box Upper. ANSI W/Horn	--
--	88037	Control Box Upper. ANSI With Generator	--
--	88038	Control Box Upper. ANSI With Horn And Generator	--
--	88039	Control Box Upper. ANSI JRM Joystick With Horn	--
--	88040	Control Box Upper. ANSI JRM Joystick With Generator	--
--	88041	Control Box Upper. ANSI JRM Joystick With Horn & Generator	--
--	88042	Control Box Upper. CE With Generator	--
--	88043	Control Box Upper. CE With Lights	--
--	88044	Control Box Upper. CE With Generator And Lights	--
--	88045	Control Box Upper. CE JRM Joystick With Generator	--
--	88046	Control Box Upper. CE JRM Joystick With Lights	--
--	88047	Control Box Upper. CE JRM Joystick With Generator & Lights	--

REF - Reference

Upper Control Box Assembly - J.R. Merritt

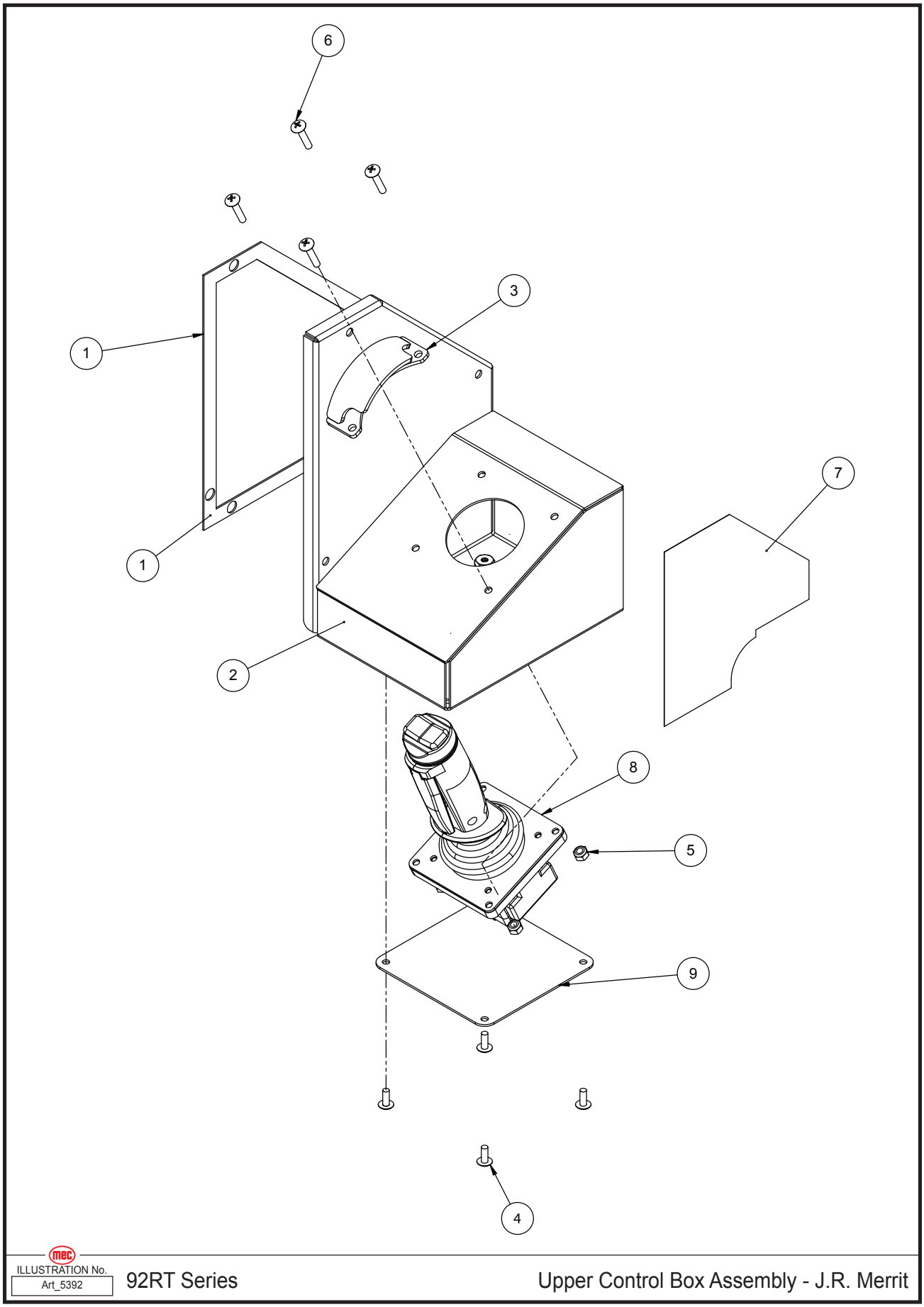

ILLUSTRATION No. Art_5392 92RT Series Upper Control Box Assembly - J.R. Merrit

Item	Part Number	Description	Qty.
1	7875	Gasket	1
2	18660	Joystick Box Weldment	1
3	28542	Palm Rest Weldment	1
4	50191	THMS #10-32X00.50 ZP	4
5	50238	NNYL #10-32 05 Z	4
6	50330	THMS #10-32X01.00 ZP	4
7	90729	Decal, Upper Control Joystick Operations	1
8	94688	Single Axis Joystick W/Trig & R/L Rocker PQ Controls 112N38-249	1
9	27343	Joystick Box Cover	1

Upper Control Box Cover Assembly

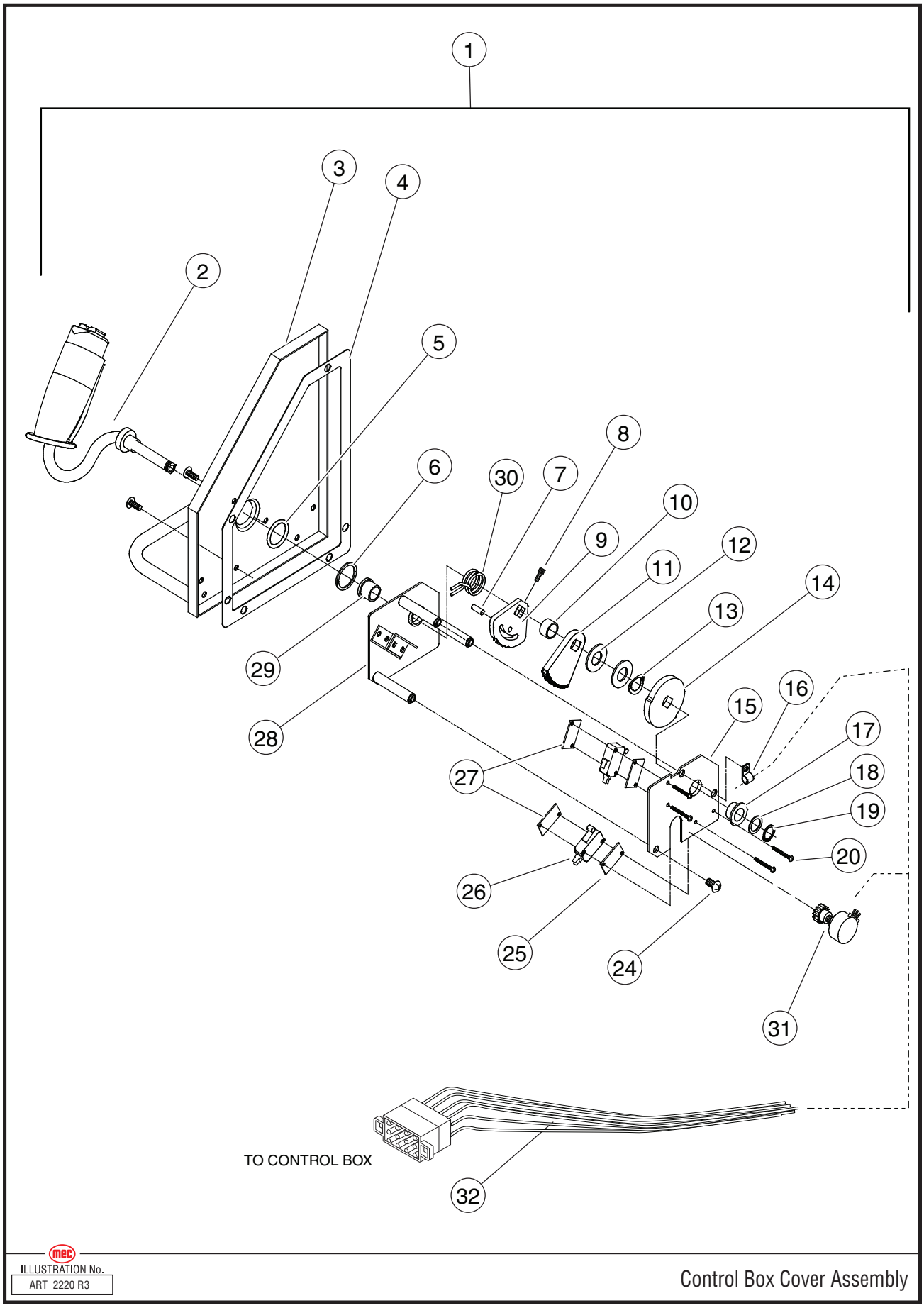

ILLUSTRATION No.
ART_2220 R3

Control Box Cover Assembly

Item	Part Number	Description	Qty.
1	83076	Control Box Cover Assembly	1
2	13647	Joystick Assembly	1
3	3772	Cover	1
4	7875	Gasket	1
5	7882	O-Ring	1
6	HDW3768	Washer, Flat	1
7	1008348	Pin, Hold Down	1
8	50155	Screw, 6–32 x 1/2 inch	1
9	13502	Bracket, Centering	1
10	3763	Spacer, Step	1
11	13402	Gear, large	1
12	HDW8531	Washer, Flat	2
13	HDW7881	Washer, Bevel	1
14	3782	Cam, Directional	1
15	13403	Plate, Bottom	1
16	6917	Clamp, Cable, 1/4 inch	1
17	7818	Bearing, Bronze, Flanged	1
18	HDW3771	Washer, Flat	1
19	5736	Ring, Retaining, 1/2 inch	1
20	50139	Screw, 4-40 x 5/8 inch	4
21	--	--	--
22	--	--	--
23	--	--	--
24	50191	Screw, 10–32 x 1/2 inch	12
25	3764	Plate, Spacer	2
26	8696	Switch, Limit, Micro V7	2
27	3765	Plate, Strap	2
28	3766	Plate, Top	1
29	7819	Bearing, Bornze, Flanged	1
30	8435	Spring, Joystick Centering	1
31	91824	Potentiometer Assembly (includes items 21, 22 & 23)	1
32	REF	Wire Harness, (see Wire Harness, Section 20 - Base)	1

REF - Reference

Upper Control Joystick

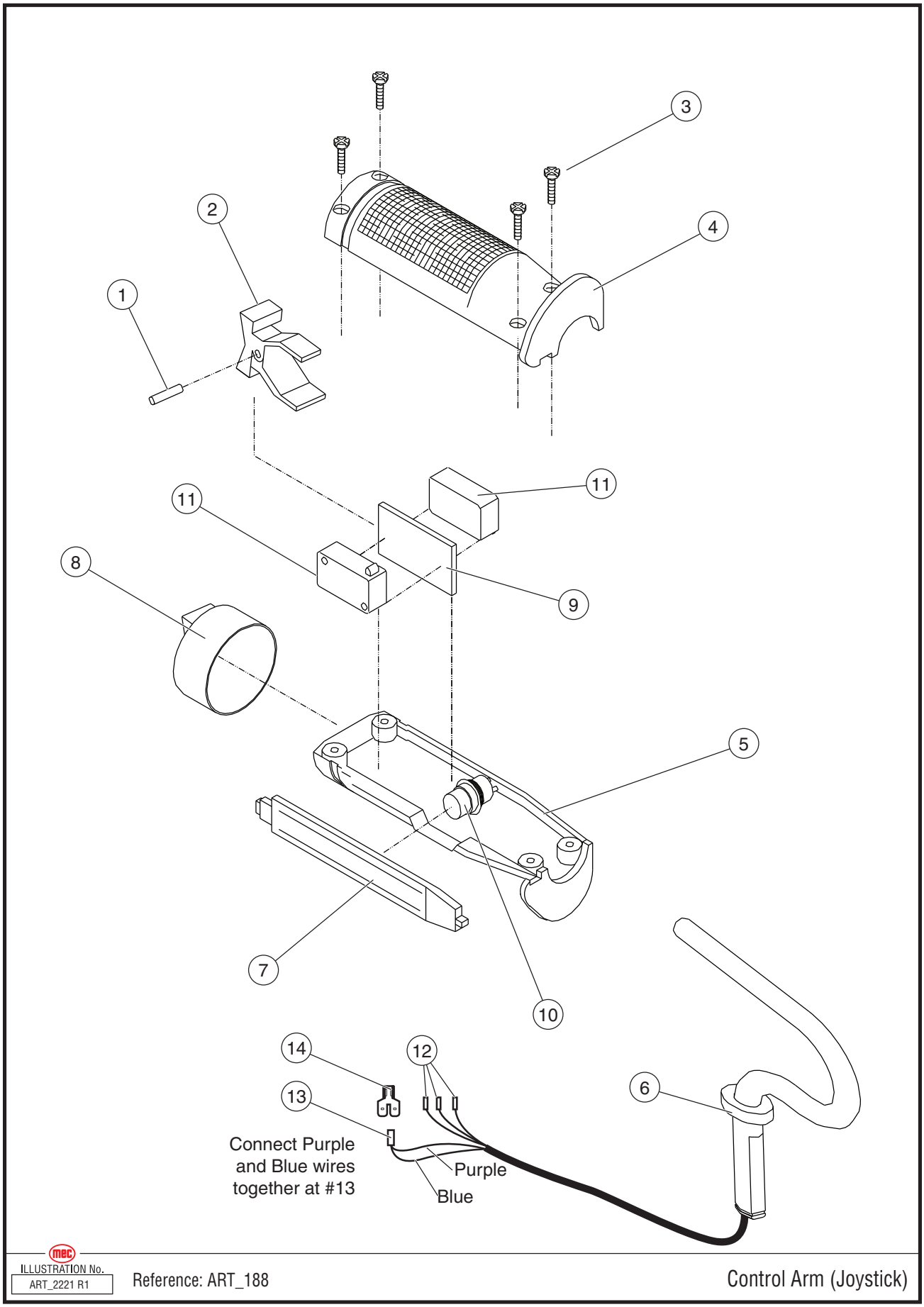

ILLUSTRATION No. ART_2221 R1

Reference: ART_188

Control Arm (Joystick)

Item	Part Number	Description	Qty.
--	92199	Joystick Assembly	--
1	8750	Pin (Service Only)	1
2	8453	Switch Actuator (Service Only)	1
3	HDW8455	Screw (Service Only)	4
4	8752	Grip, Top Half (Service Only)	1
5	8751	Grip, Bottom Half (Service Only)	1
6	13638	Control Arm without wire	1
7	8748	Trigger (Service Only)	1
8	8456	Rocker Boot (Service Only)	1
9	8447	Switch Seperator (Service Only)	1
10	8753	Motion Switch, OFF-ON (Service Only)	1
11	8448	Switch (Service Only)	2
12	91839	Amp Socket (not shown)	3
13	92194	Push Connector	1
14	92198	Terminal, Piggyback Connector	1
--	8761	Switch Assembly (not shown) -- includes item #9, item #11 (x2), wire and connectors	--

Lower Controls

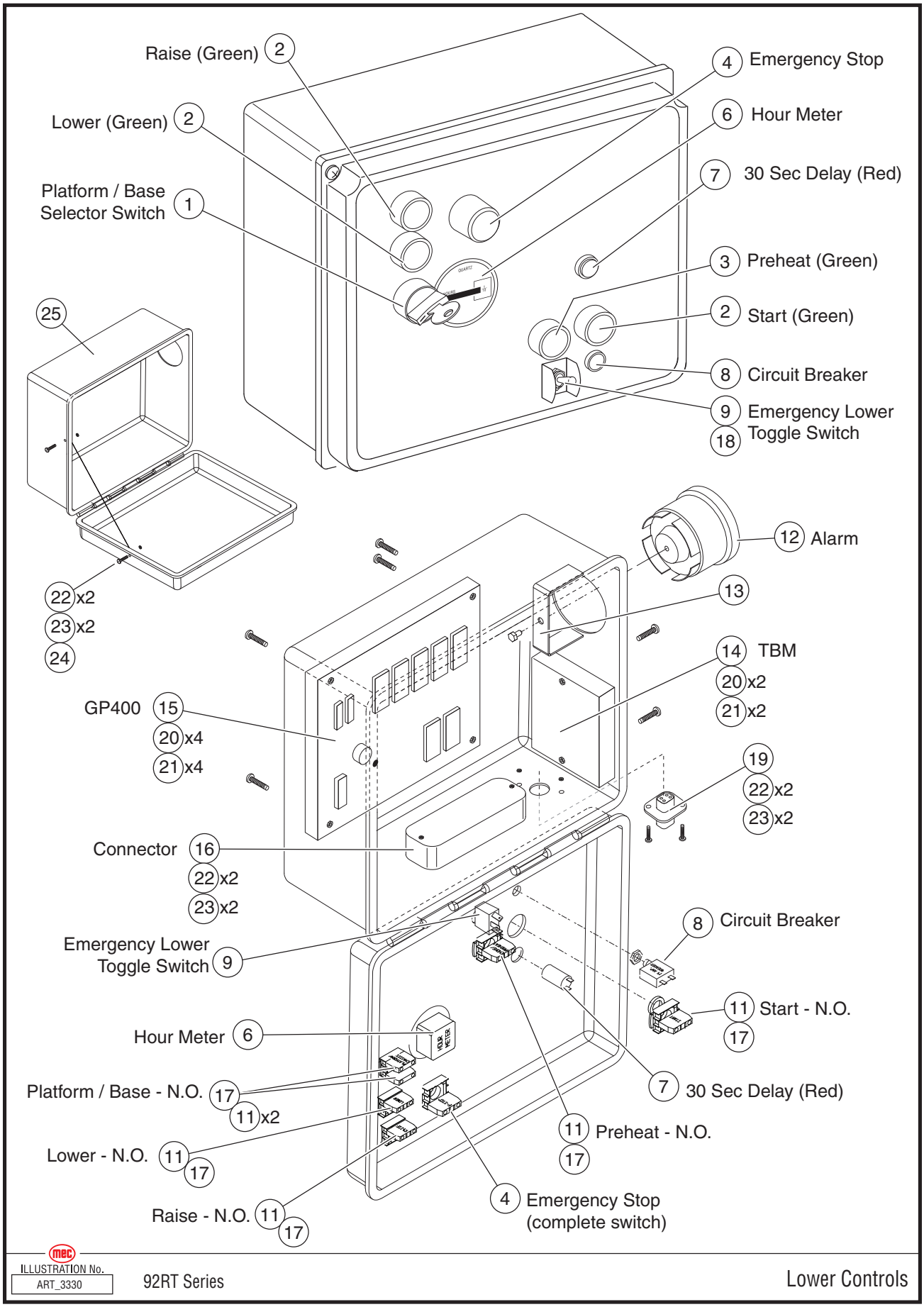

Item	Part Number	Description	Qty.
--	91179	Lower Control Box Assembly	1
1	9549	Switch, 3-Position, Keyed	1
2	91667	Switch, Button, Green	4
3	--	--	--
4	7800	Switch, Emergency Stop	1
5	--	--	--
6	91704	Hour Meter	1
7	9183	Lens, Red	1
	9188	Light, Bayonet, 14 Volt	1
	9179	Socket, Indicator Light	1
8	7235	Circuit Breaker	1
9	5630	Switch, Toggle, 1 Pole 2 Position, Emergency Down	1
10	--	--	--
11	8082	Contact Block, N. O.	7
12	91711	Alarm, 107dB	1
13	17082	Bracket, Alarm Mount	1
14	91838	Terminal Block Module (TBM)	1
15	91659	System Controller, GP400	1
16	91887	Deutsch Connector, DRC 12 70P	1
17	90714	Contact Base	6
18	1313	Switch Guard	1
19	91290	Deutsch Connection, DT4-4P-L012	1
20	50229	Screw, 10-24 x 1.00	6
21	50230	Nut, 10-24 Nylock	6
22	50233	Screw, 8-32 x 1.00	6
23	50231	Nut, 8-32 Nylock	6
24	91921	Lanyard	1
25		Control Box	1
--	REF	Harness -- See Section 20 - Base	--

REF - Reference

Platform, Basic Assembly, Early 5492RT

Indicate Early 5492RT With Curved Guardrails When Ordering Parts

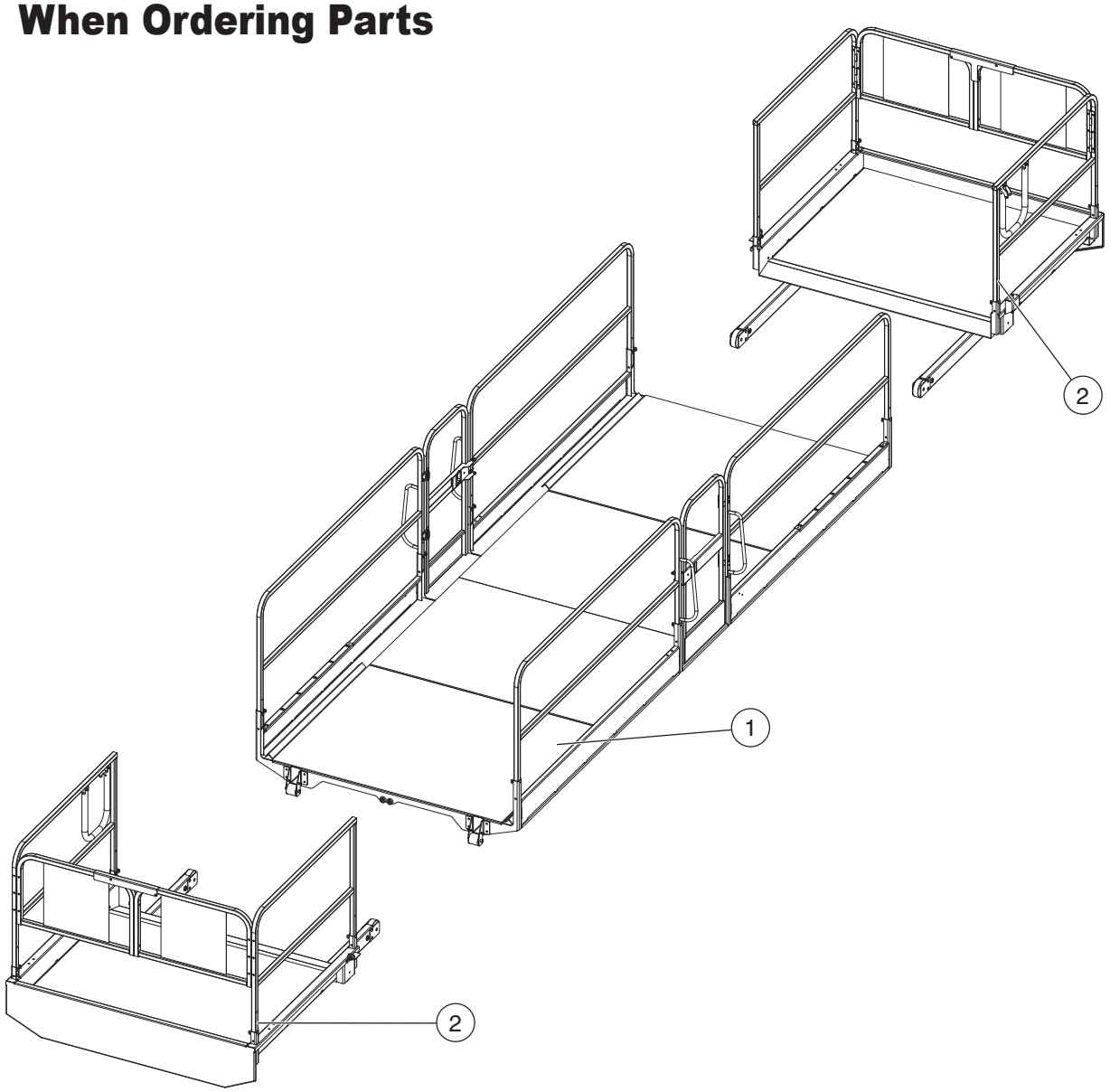

ILLUSTRATION No. ART_3319 5492RT PLATFORM, BASIC ASSEMBLY

Item	Part Number	Description	Qty.
--	84120	Platform/Guardrail Assembly	1
1	84122	Main Platform Assembly	1
2	84124	Platform Extension Assembly	2

Platform, Drawing 1 of 3, Early 5492RT

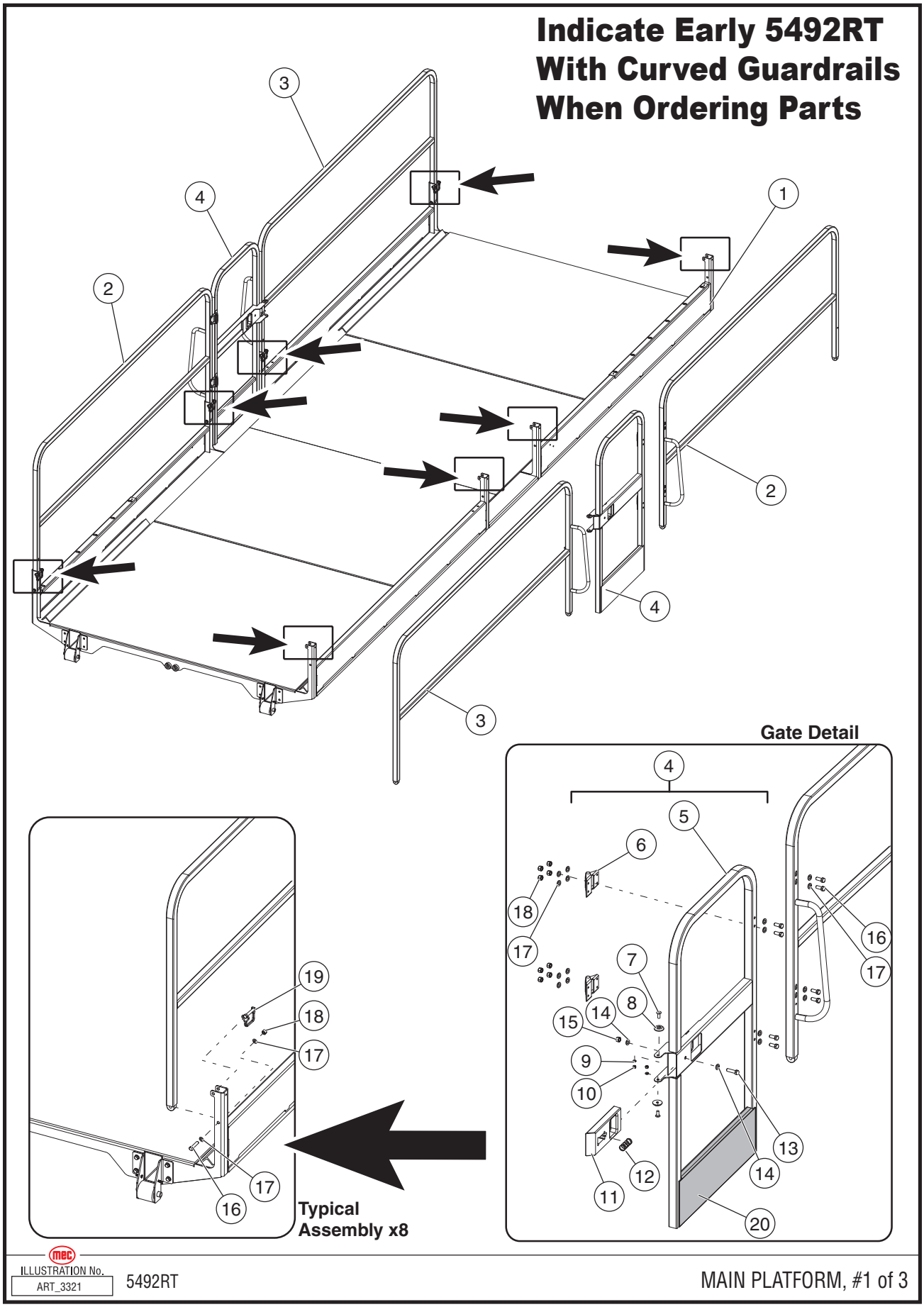

Item	Part Number	Description	Qty.
--	84122	Main Platform Assembly	--
1	17750	Platform Weldment	1
2	17759	Side Rail Weldment	2
3	17757	Side Rail Weldment	2
4	84125	Gate Assembly	2
Quantities for items #5 through #15 indicate the number needed per Gate Assembly (item #4)			
5	17758	Gate Weldment, 23.25” -- **Measure Before Ordering**	1
	16810	Gate Weldment, 22.5” -- **Measure Before Ordering**	1
6	91629	Gate Hinge	2
--	17767	Spacer (not shown)	2
7	50306	Bolt, Taper Head 1/4-20 x .75	2
8	16788	Slide Bumper	2
9	--	--	--
10	50166	Nut, 1/4-20 Nylock	2
11	16799	Gate Latch	1
12	7408	Spring, Gate Latch	1
13	50036	Bolt, M10 x 50	1
14	50000	Washer, M10	10
15	50048	Nut, M8 Nylock	1
16	50021	Bolt, HHCS M10 x 55	16
17	50002	Washer, M10 Std	32
18	50053	Nut, M10 Nylock	16
19	50182	Clip Fastener, 3/8 X 2	8
20	17767	Gate Toe Board	2
21	--	--	--
22	--	--	--

Platform, Drawing 2 of 3, Early 5492RT

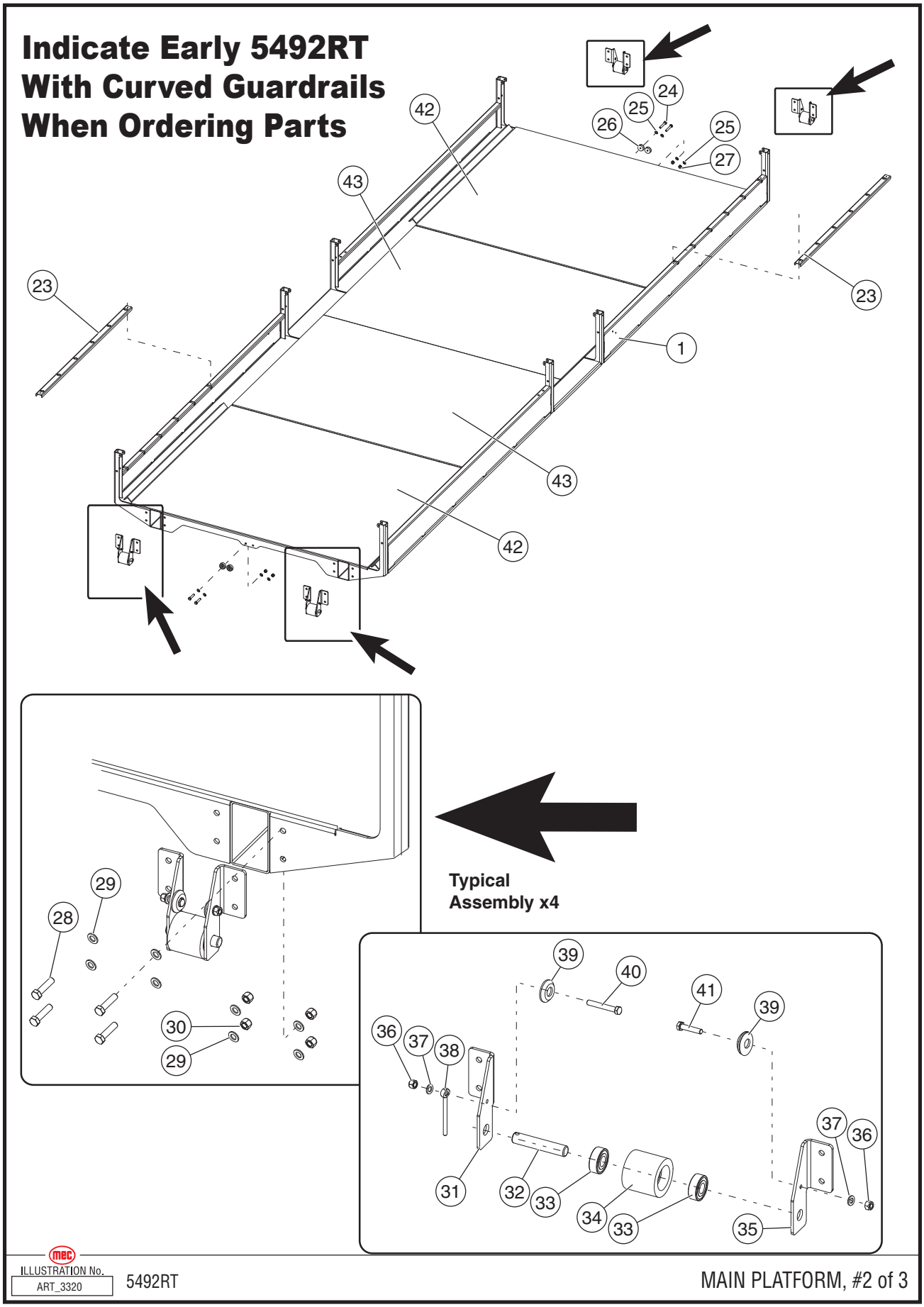

ILLUSTRATION No. ART_3320 5492RT MAIN PLATFORM, #2 of 3

Item	Part Number	Description	Qty.
--	84122	Main Platform Assembly	--
23	17907	Cap, Extension Deck Stop	2
24	50214	Bolt, M6 x 30	4
25	50000	Washer, M6 Std	8
26	17400	Recess Bumper, 5/16” Bore	4
27	50047	Nut, M6 Nylock	4
28	50031	Bolt, M8-1.25 x 25	16
29	50001	Washer, M8 Std	32
30	50048	Nut, M8 Nylock	16
31	16794	Roller Bracket, Left	4
32	16797	Roller Shaft, Main Deck	4
33	91593	Bearing, .75 id x 1.7813 od x .6094 w	8
34	16798	Deck Roller - Main Deck	4
35	16796	Roller Bracket, Right	4
36	50166	Nut, 1/4-20 Nylock	8
37	50001	Washer, M8	4
38	92270	Pin Keeper	4
39	18165	Slide Bumper	8
40	50194	Bolt, Taper Head 1/4-20 x 1	4
41	50306	Bolt, Taper Head 1/4-20 x .75	4
42	17340	Deck Plate, Slide	2
43	17339	Deck Plate, Center	2

Platform, Drawing 3 of 3, Early 5492RT

Indicate Early 5492RT With Curved Guardrails When Ordering Parts

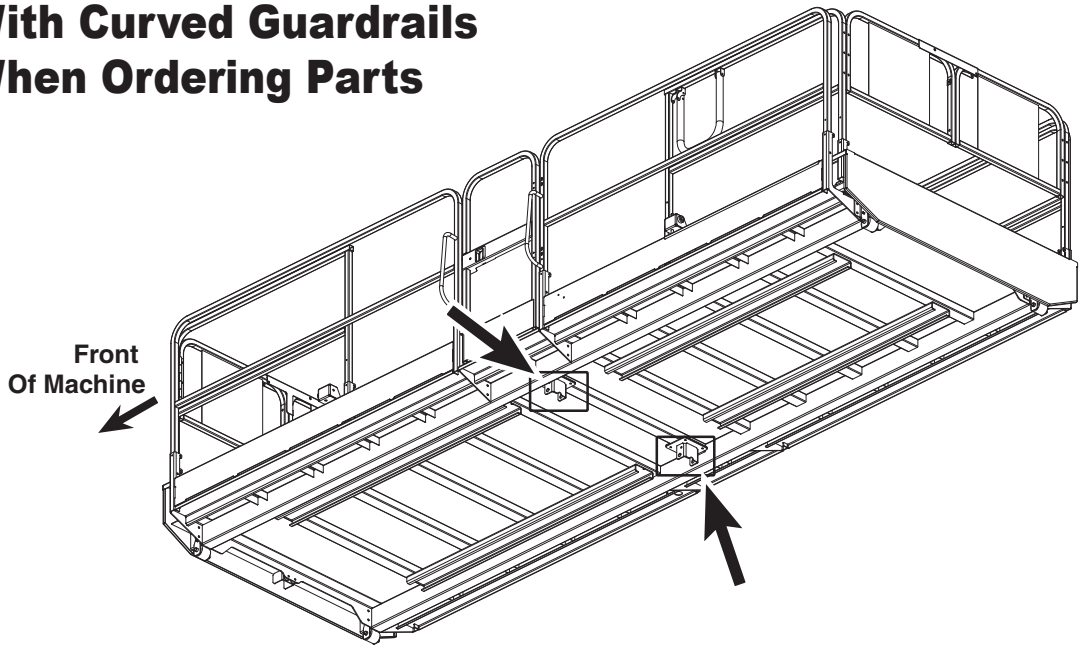

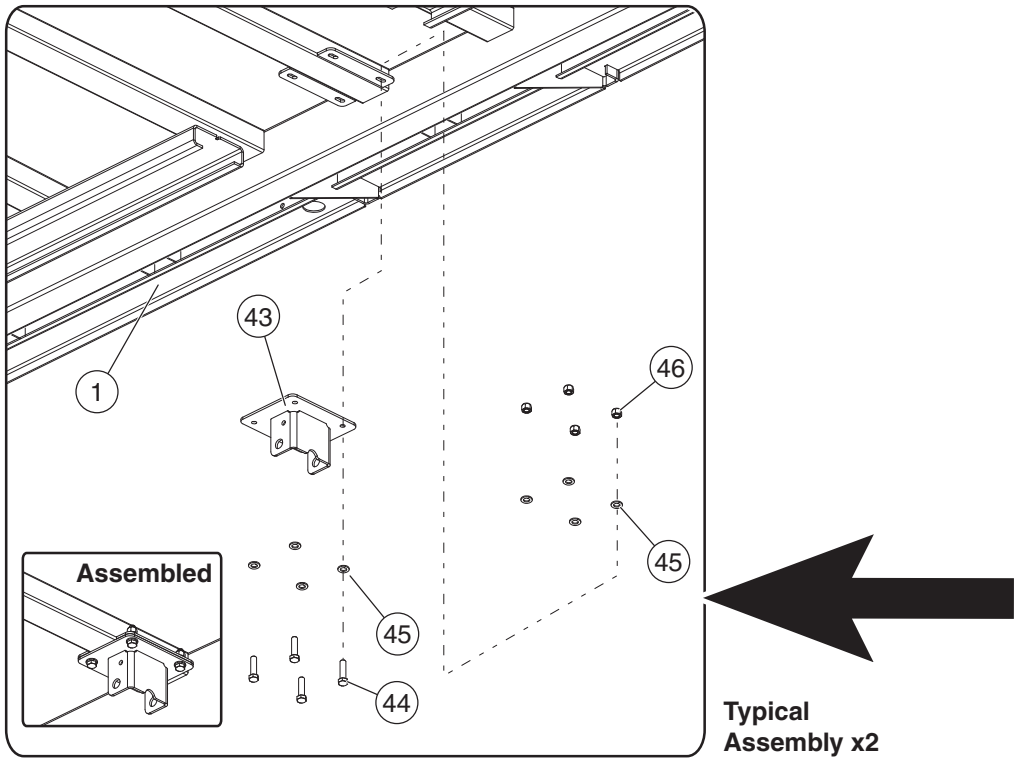

ILLUSTRATION No. ART_3327 5492RT MAIN PLATFORM, #3 of 3

Item	Part Number	Description	Qty.
--	84122	Main Platform Assembly	--
43	17755	Centering Bracket	2
44	50116	Bolt, M10 x 25	8
45	50002	Washer, M10 Standard	16
46	50053	Nut, M10 Nylock	8

Platform Extension, Early 5492RT

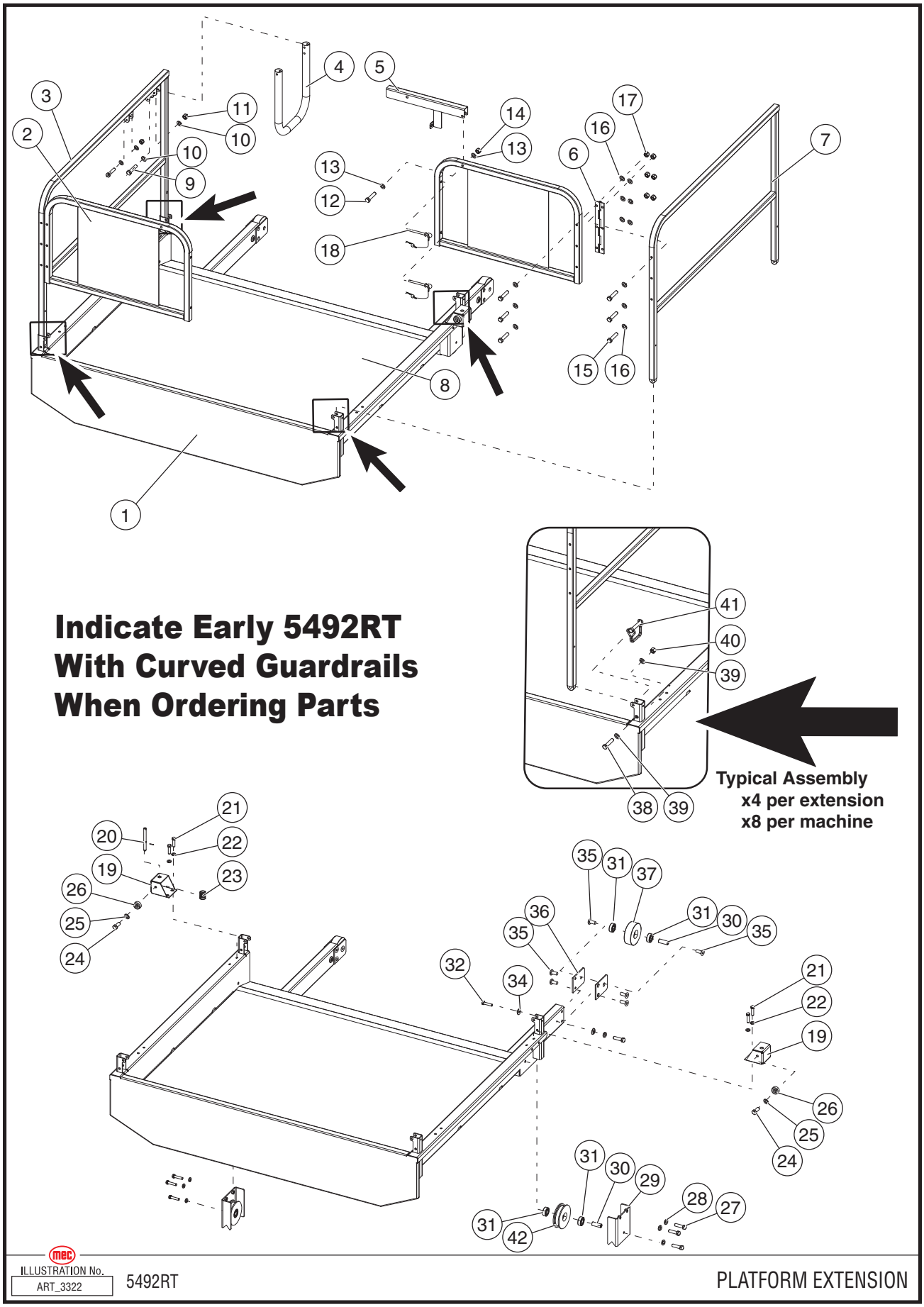

Item	Part Number	Description	# Per Assembly	# Per Machine
--	84124	Platform Extension Assembly	--	--
1	16786	Extension Deck	1	2
2	17762	End Rail	2	4
3	17760	Side Rail	1	2
4	17364	Tube Handle, Extension Deck	4	8
--	7184	Cable, Coated and Rolled	4.5 ft	9 ft
--	8814	Sleeve, Aluminum Oval	2	4
--	50125	Bolt, M6 x 55	1	2
--	50047	Nut, N6 Nylock	1	2
5	17341	Gate Bracket	1	2
6	17830	Hinge	2	4
7	17761	Side Rail	1	2
8	16795	Deck Plate, Extension Deck, 50” x 65.5” -- **Measure Before Ordering**	1	2
	17778	Deck Plate, Extension Deck, 48” x 64” -- **Measure Before Ordering**	1	2
9	50125	Bolt, M6 x 55	2	4
10	50000	Washer, M6 Std	4	8
11	50047	Nut, N6 Nylock	2	4
12	50020	Bolt, M10 x 50	1	2
13	50002	Washer, M10	2	4
14	50049	Nut, M10 Nylock	1	2
15	50015	Bolt, M8 x 50	12	24
16	50001	Washer, M8 Std	24	48
17	50048	Nut,M8 Nylock	12	24
18	91284	Pin, Gate Closure	2	4
19	17693	Deck Stop	2	4
20	17414	Pin, Deck Extension Lock	1	2
21	50033	Bolt, HHCS M10 x 25	2	4
22	50002	Washer, M10 Std	2	4
23	92218	Spring	1	2
24	50214	Bolt, M6 x 30	2	4
25	50000	Washer, M6 Std	2	4
26	17400	Recess Bumper, 5/16” Bore	2	4
27	50219	Bolt, 3/8-16 x .75	6	12
28	50002	Washer, M10 Std	6	12
29	17756	Roller Bracket	2	4
30	16791	Roller Shaft	4	8
31	91593	Bearing .75id 1.7813od .6094w	8	16
32	50306	Bolt, FSCS 1/4-20 x .75	4	8
33	--	--	--	--
34	16788	Slide Bumper	4	8
35	HDW91607	Bolt, FHSCS 3/8-16 x .75	12	24
36	16779	Roller Mount	4	8
37	16792	End Roller, Extension Deck	2	4
38	50021	Bolt, HHCS M10 x 55	4	8
39	50002	Washer, M10 Std	8	16
40	50053	Nut, M10 Nylock	4	8
41	50182	Clip Fastener, 3/8 X 2	4	8
42	17815	Track Roller, Extension Deck	2	4

Platform, Basic Assembly, Later 5492RT, 3392RT, 6092RT

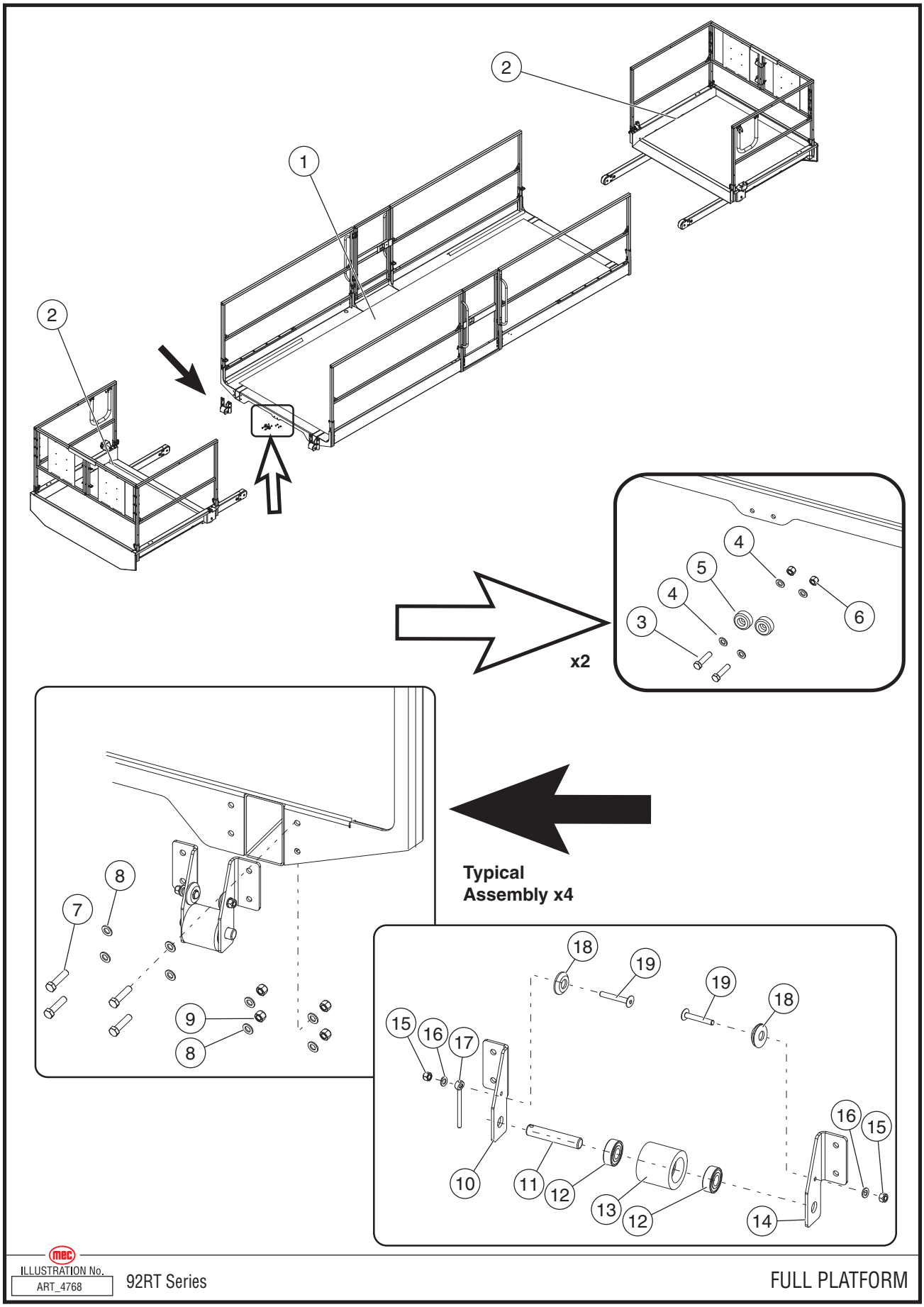

ILLUSTRATION No. ART_4768 92RT Series FULL PLATFORM

Item	Part Number	Description	Qty.
1	REF	Main Platform Assembly	1
2	84124	Extension Deck Assembly	2
3	50214	Bolt, M6 x 30	4
4	50000	Washer, M6 Std	8
5	17400	Recess Bumper, 5/16” Bore	4
6	50047	Nut, M6 Nylock	4
7	50031	Bolt, M8-1.25 x 25	16
8	50001	Washer, M8 Std	32
9	50048	Nut, M8 Nylock	16
10	16794	Roller Bracket, Left	4
11	16797	Roller Shaft, Main Deck	4
12	91593	Bearing, .75 id x 1.7813 od x .6094 w	8
13	16798	Deck Roller - Main Deck	4
14	16796	Roller Bracket, Right	4
15	50166	Nut, 1/4-20 Nylock	8
16	50001	Washer, M8	4
17	92270	Pin Keeper	4
18	17688	Slide Bumper	8
19	50194	Bolt, Taper Head 1/4-20 x 1	4

REF - Reference

Main Platform, Later 5492RT, 3392RT, 6092RT

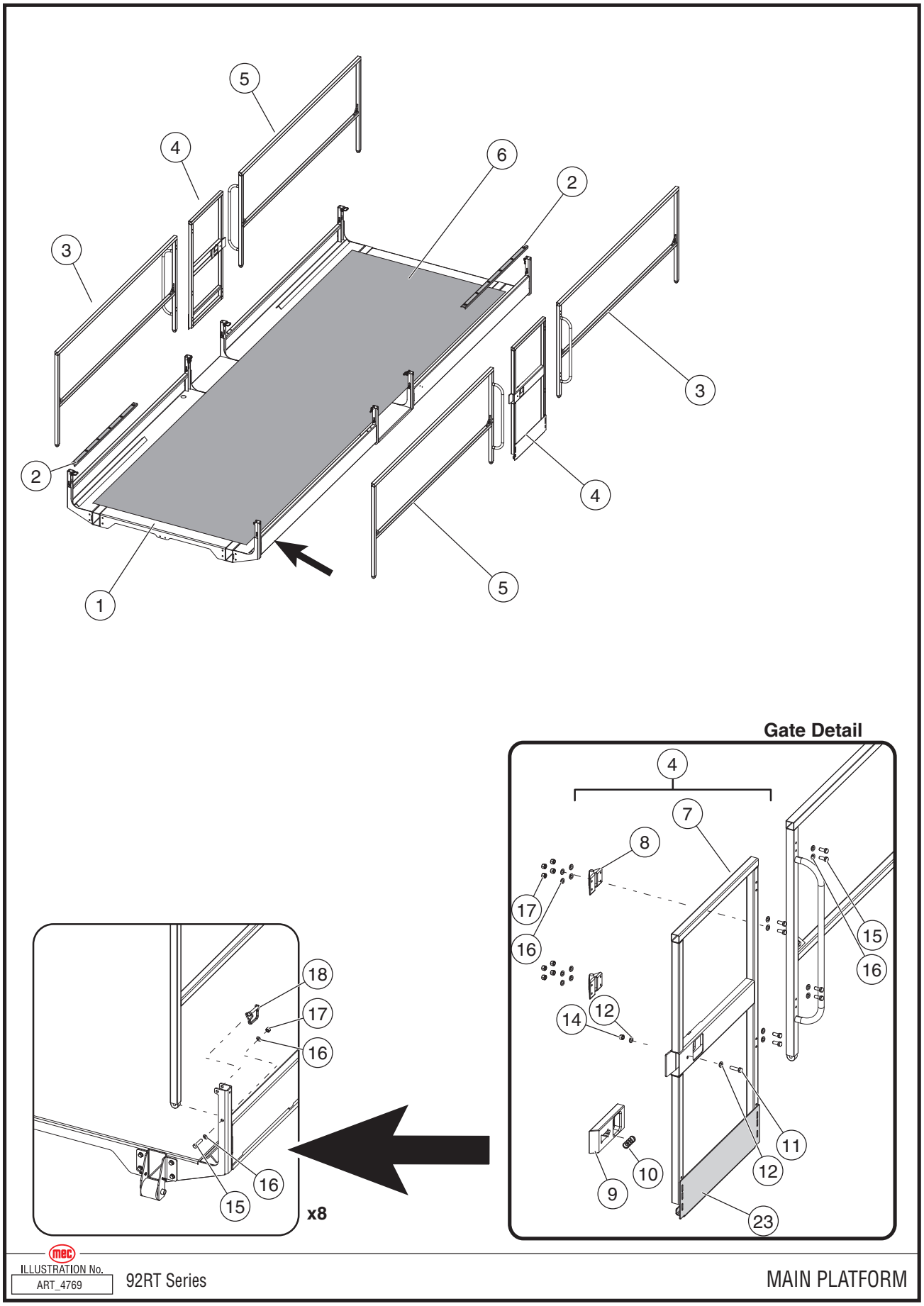

ILLUSTRATION No. ART_4769

92RT Series

MAIN PLATFORM

Item	Part Number	Description	Qty.
1	17772	Main Platform Weldment	1
2	17907	Cap, Extension Deck Stop	2
3	17759	Side Rail Weldment	2
4	--	Gate Assembly	2
5	17757	Side Rail Weldment	2
6	17769	Deck Plate	1
Quantities for following item indicate the number needed per location			
7	22366	Gate Weldment	1
8	91629	Gate Hinge	2
--	17767	Spacer (not shown)	2
9	16799	Gate Latch	1
10	16800	Spring, Gate Latch	1
11	50015	Bolt, M8 x 50	1
12	50001	Washer, M8	10
13	--	--	--
14	50048	Nut, M8 Nylock	1
15	50021	Bolt, HHCS M10 x 55	16
16	50002	Washer, M10 Std	32
17	50053	Nut, M10 Nylock	16
18	50182	Clip Fastener, 3/8 X 2	8
19	22349	Gate Toe Board	2

Platform Centering Brackets, Later 5492RT, 3392RT, 6092RT

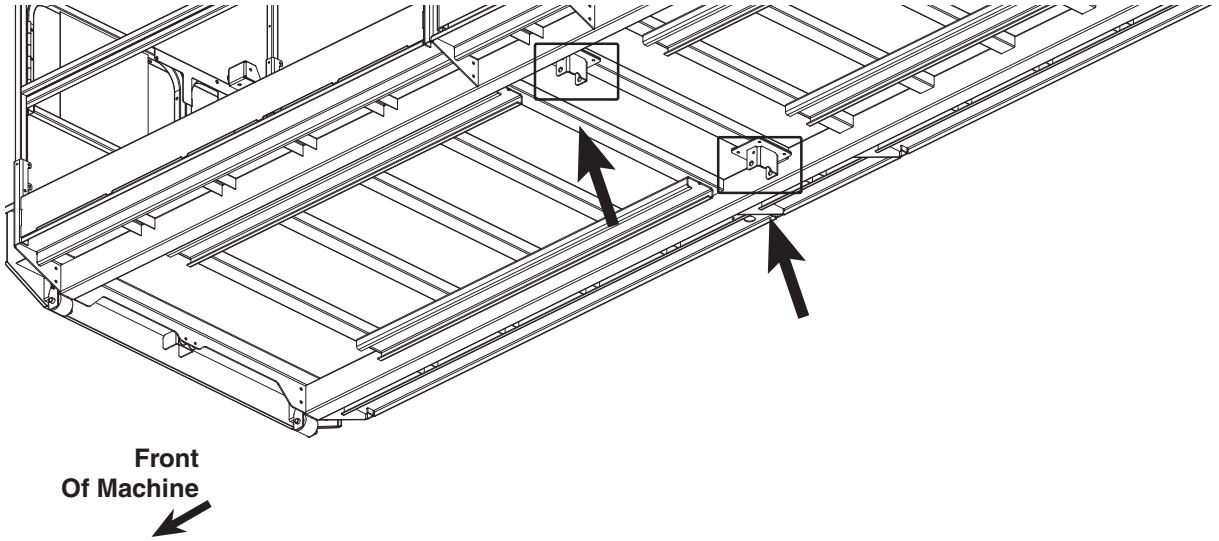

Front
Of Machine

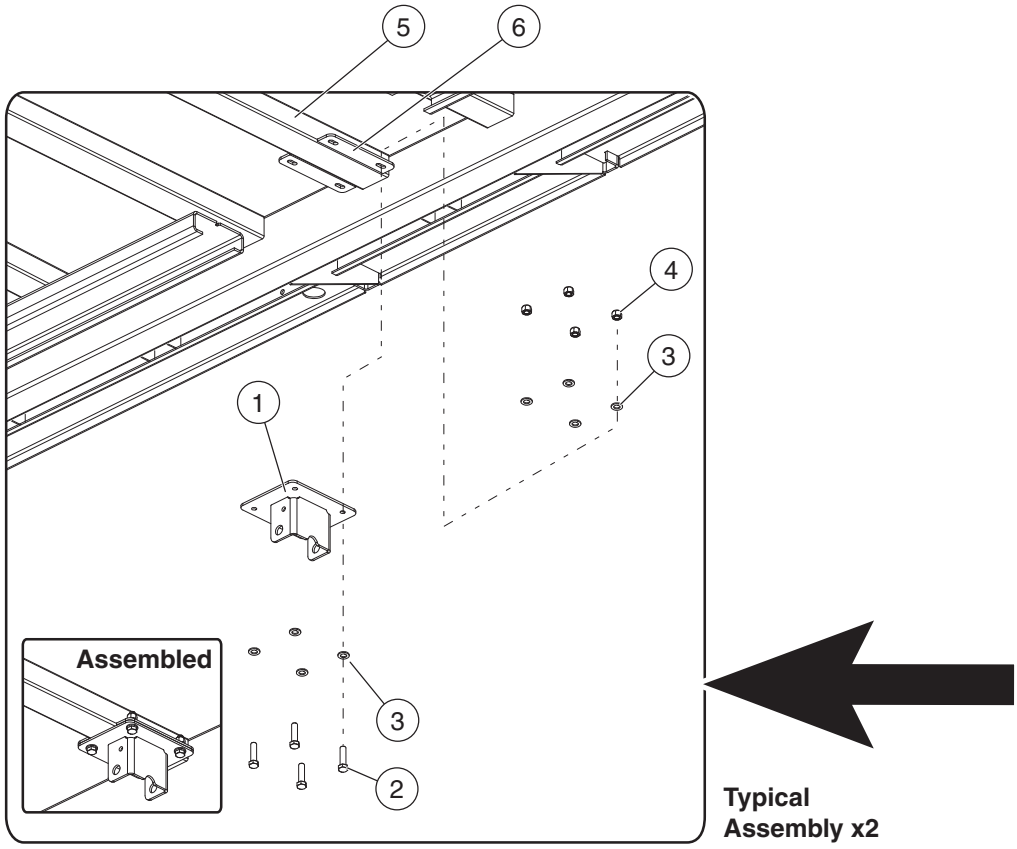

Typical
Assembly x2

ILLUSTRATION No.
ART_4770

92RT Series

Platform Centering Brackets

Item	Part Number	Description	Qty.
1	17755	Centering Bracket	2
2	50116	Bolt, M10 x 25	8
3	50002	Washer, M10 Standard	16
4	50053	Nut, M10 Nylock	8
5	17790	Cross Tube - Main Deck	1
6	17811	Bracket, Mount - Centering Link	4

Platform Extension, 1 of 2, Later 5492RT, 3392RT, 6092RT

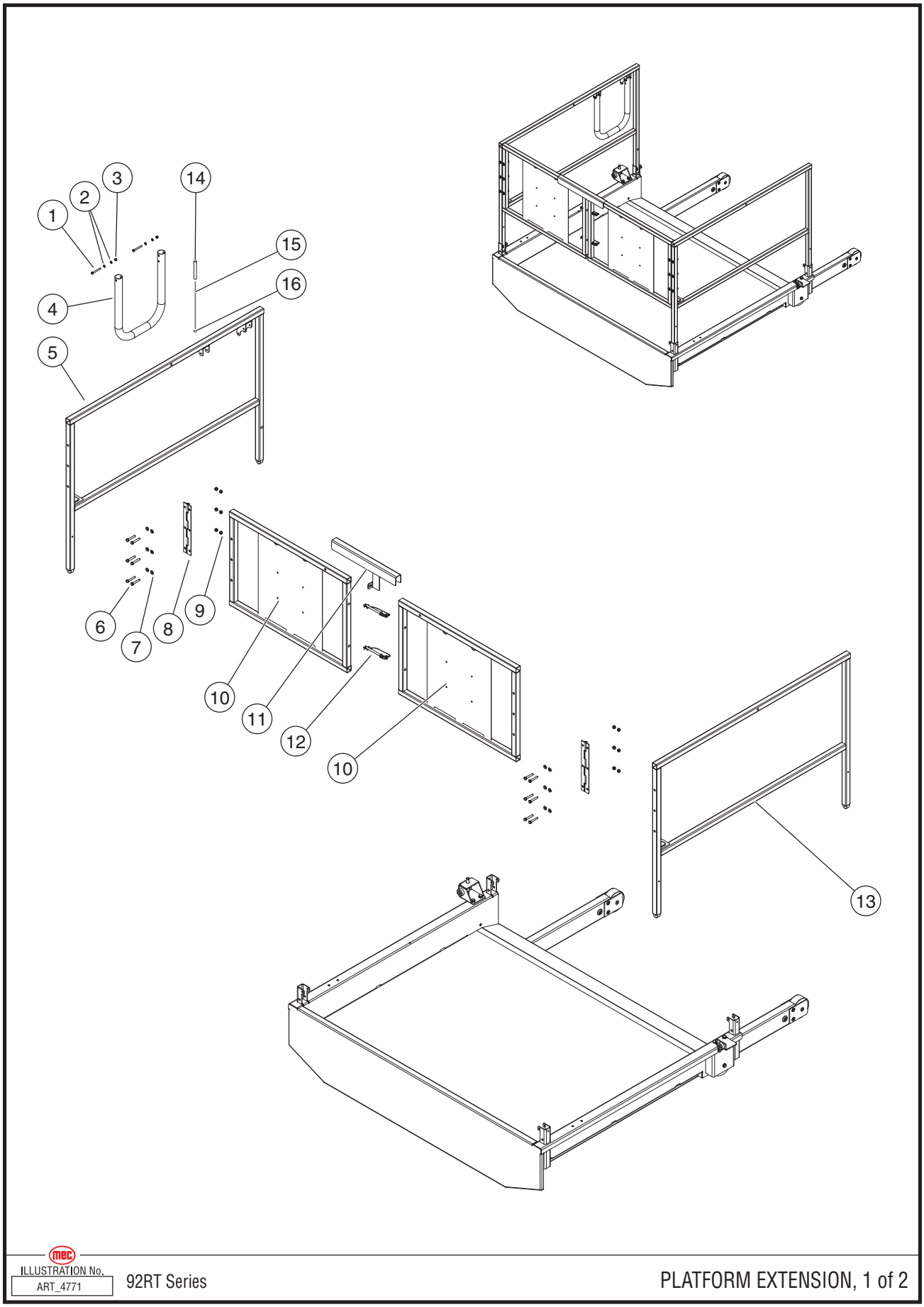

ILLUSTRATION No. ART_4771 92RT Series PLATFORM EXTENSION, 1 of 2

Item	Part Number	Description	Qty.
Quantities listed are per extension; 2 extensions per machine.			
1	50125	Bolt, M6 x 55	2
2	50000	Washer, M6 Std	4
3	50047	Nut, M6 Nylock	2
4	17364	Extension Handle	1
5	17760	Guardrail, Right	1
6	50015	Bolt, M8 x 50	12
7	50001	Washer, M8 Std	12
8	17830	Hinge	2
9	50048	Nut, M8 Nylock	12
10	16786	End Panel	2
11	17341	Gate Bracket	1
12	91284	Hitch Pin	2
13	17761	Guardrail, Left	1
14	8814	Sleeve	2
15	7184	Wire Cable	87”
16	50472	Spring	1

Platform Extension, 2 of 2, Later 5492RT, 3392RT, 6092RT

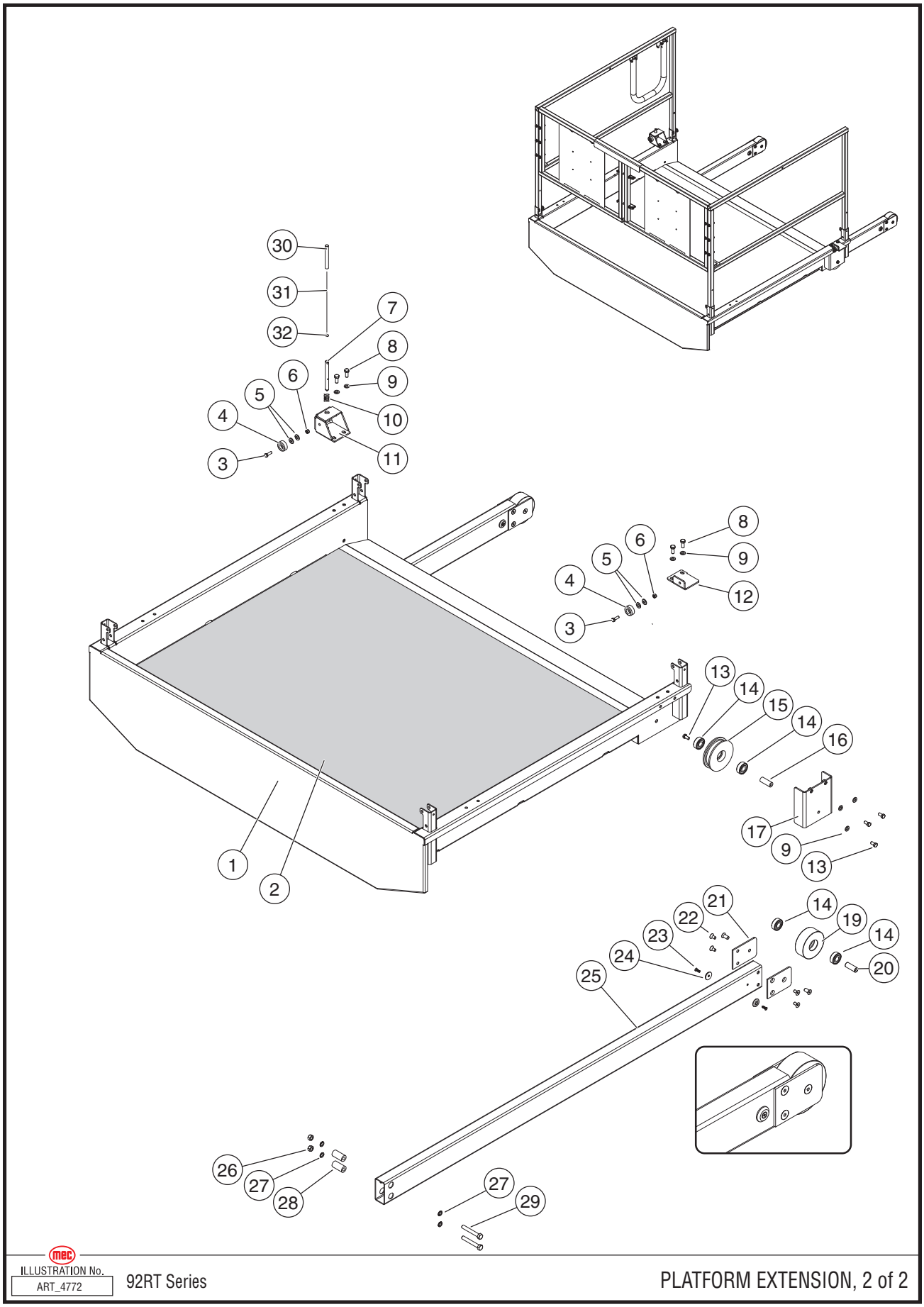

ILLUSTRATION No. ART_4772 92RT Series PLATFORM EXTENSION, 2 of 2

Item	Part Number	Description	Qty.
Quantities listed are per extension; 2 extensions per machine			
1	17752	Platform Extension Weldment	1
2	16795	Deck Plate	1
3	50031	Bolt, M8 x 25	2
4	17400	Bumper	2
5	50218	Washer, M8 Std	4
6	50048	Nut, M8 Nylock	2
7	17414	Pin	1
8	50033	Bolt, M10 x 25	4
9	50002	Washer, M10 Std	4
10	92218	Spring	1
11	17692	Bracket	1
12	17159	Bracket	1
13	50219	Bolt, 3/8 x .75	8
14	91593	Bearing	8
15	17815	Roller	2
16	16791	Axle	2
17	17814	Bracket	2
18	--	--	--
19	16792	Roller	2
20	16791	Axle	2
21	16779	Roller Plate	4
22	50400	Bolt, Flat Socket M12 x 25	12
23	50450	Bolt, Flat Socket M6 x 20	4
24	16788	Slide Bumper	4
25	17792	Slide Tube	2
26	50201	Nut, 1/2 Nylock	4
27	50004	Washer, M16	8
28	17834	Tube Slider	4
29	50074	Bolt, 1/2 x 3.5	4
30	8814	Sleeve	2
31	7184	Wire Cable	87”
32	50472	Spring	1

Slideout Deck Assembly - 6092RT From Serial # 12900135

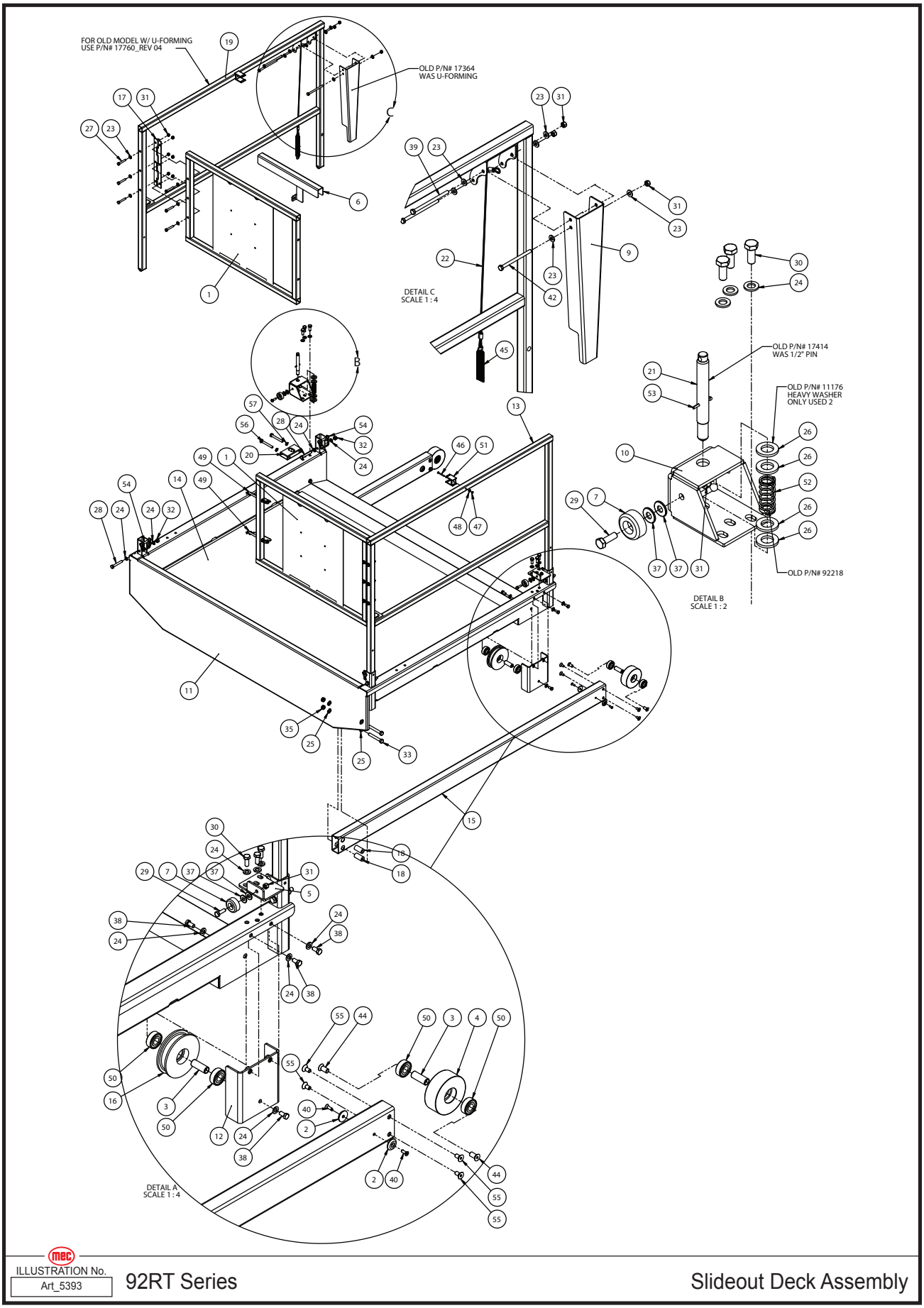

ILLUSTRATION No. Art_5393

92RT Series

Slideout Deck Assembly

Item	Part Number	Description	Qty.
1	16786	End Rail - Weldment	2
2	16788	Slide Bumper	4
3	16791	Roller Shaft	4
4	16792	End Roller Ext. Deck	2
5	17159	Stop Bracket Ext. Deck (Non-Locking Side)	1
6	17341	Bracket Gate Latch	1
7	17400	Rubber Bumper	2
8	17402	Plastic Rivet	1
9	17425	Wide Deck Handle	1
10	17693	Stop Bracket Weldment	1
11	17752	Extension Deck Weldment	1
12	17756	Roller Bracket Weldment	2
13	17761	Side Rail - Extension Deck	1
14	17778	Ext. Deck Deck Plate	1
15	17792	Slider Tube Ext. Deck	2
16	17815	Track Roller Ext. Deck	2
17	17830	Hinge 2” X 2” X 12”	2
18	17834	Slider Tube Unthreaded Spacer	4
19	18416	Side Rail Lever Side Extension Deck	1
20	18418	Lock Pin Support Block	1
21	18669	Pin, Extension Lock (Thicker & Stainless)	1
22	18670	Lanyard, Extension Lock Release	1
23	50001	WSHR M08 ZP Standard Flat	18
24	50002	WSHR M10 ZP Standard Flat	20
25	50003	WSHR M12 ZP Standard Flat	8
26	50004	WSHR M16 ZP Standard Flat	4
27	50015	HHCS M08-1.25X050 08 ZP P	12
28	50022	HHCS M10-1.50X070 08 ZP P	4
29	50031	HHCS M08-1.25X025 08 ZP F	2

Item	Part Number	Description	Qty.
30	50033	HHCS M10-1.50X025 08 ZP F	6
31	50048	NNYL M08X1.25 08 ZP Nylon	17
32	50049	NNYL M10X1.50 08 ZP Nylon Inse	4
33	50074	HHCS 01/02-13X03.50 05 ZP	4
34	50166	NLOC 01/04-20 05 ZP Hex LOC 2	4
35	50201	NLOC 01/02-13 05 ZP Top LOC	4
36	50210	NNYL 03/08-16 05 ZP	8
37	50218	WSHR M08 ZP Fender	4
38	50219	HHCS 03/08-16X00.75 05 ZP	6
39	50220	HHCS M08-1.25X130 08 ZP P	2
40	50306	FSCS 01/04-20X00.75 ZP (Counter Sink Head)	4
41	50341	M10 X 1.5 Weld Nut	2
42	50376	HHCS M08-1.25X110 08 ZP	1
43	50399	WHSR 1/4” SAE Flat	4
44	50400	3/8-16 x 3/4 Flat Head Socket Screw	4
45	50472	Spring 6.5” Length OD .75” Wire Dia. .091”	1
46	50523	BHCS M05-0.80 X 45, ZP	2
47	50524	NNYL M05-0.80 Nylon Lock Nut	2
48	50525	WSHR, M05, Fender, Flat, ZP	2
49	91284	Pin, Hitch 3/8 x 4	2
50	91593	Ball Bearing .75ID 1.7813OD .6094W	8
51	93249	Square Tubing Clip, 1-1/4”	2
52	94428	Spring, Compression, 0.68” I.D., 0.85” O.D., .085” Wire Thickness, 22 LB/IN	1
53	94429	Cotter Pin, 1/8” Diameter, 1” Length, 316 Stainless	1
54	HDW7593	Pin Wire Lock 0.375 X 2.25	4
55	HDW91607	3/8-16 x 3/4 Flat Head Socket Screw	8
56	50352	HHCS M10-1.50 X 080 08 ZP P	2
57	50006	WSHR M10 ZP Nordlock	2

Scissor Section 1 & Chassis, 5492RT

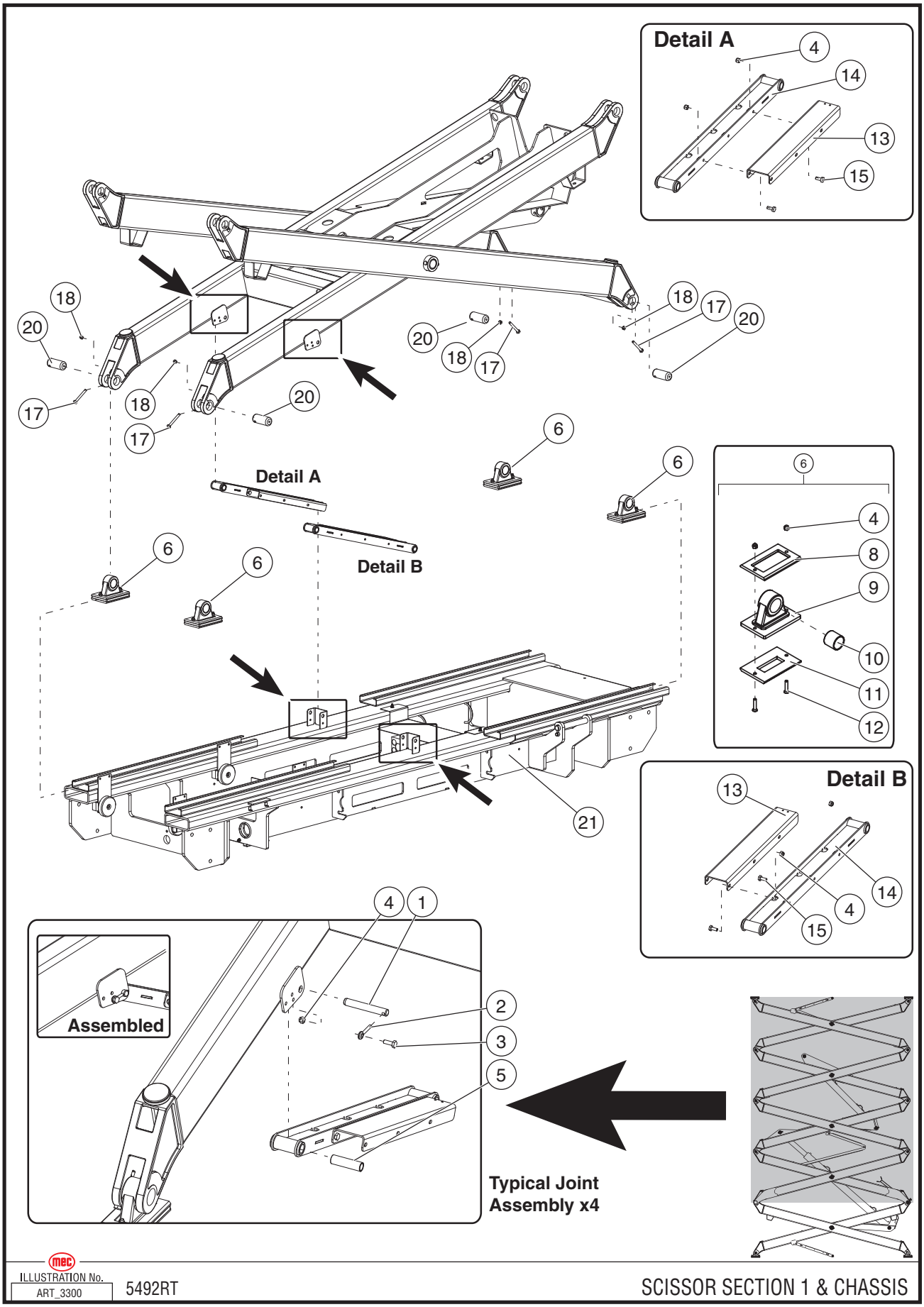

ILLUSTRATION No. ART_3300 5492RT SCISSOR SECTION 1 & CHASSIS

Item	Part Number	Description	Qty.
1	17905	Pin, Centering Linkage	4
2	18151	Banjo Pin	4
3	50034	Bolt, M10 x 30	4
4	50053	Nut, M10 Nylock	16
5	17920	Sleeve	4
6	17924	Assembly, Scissor Slide	4
7	--	--	--
8	17903	Pad, Inner Scissor Slide	4
9	17902	Casting, Scissor Slide	4
10	17921	Bearing	4
11	17904	Pad, Outer, Scissor Slide	4
12	50322	Screw, FSCS Tapered, M10 x 50	8
13	17906	Arm Component, Lower Centering Linkage	2
14	17922	Weldment, Centering Linkage	2
15	50031	Bolt, M10 x 25	4
16	--	--	--
17	50323	Bolt, HHCS M12 x 100 GR10.9	4
18	50050	Nut, M12 Nylock	4
19	--	--	--
20	17901	Pin, Scissor End	4
21	REF	Chassis	--

REF - Reference

Scissor Section 1, 5492RT

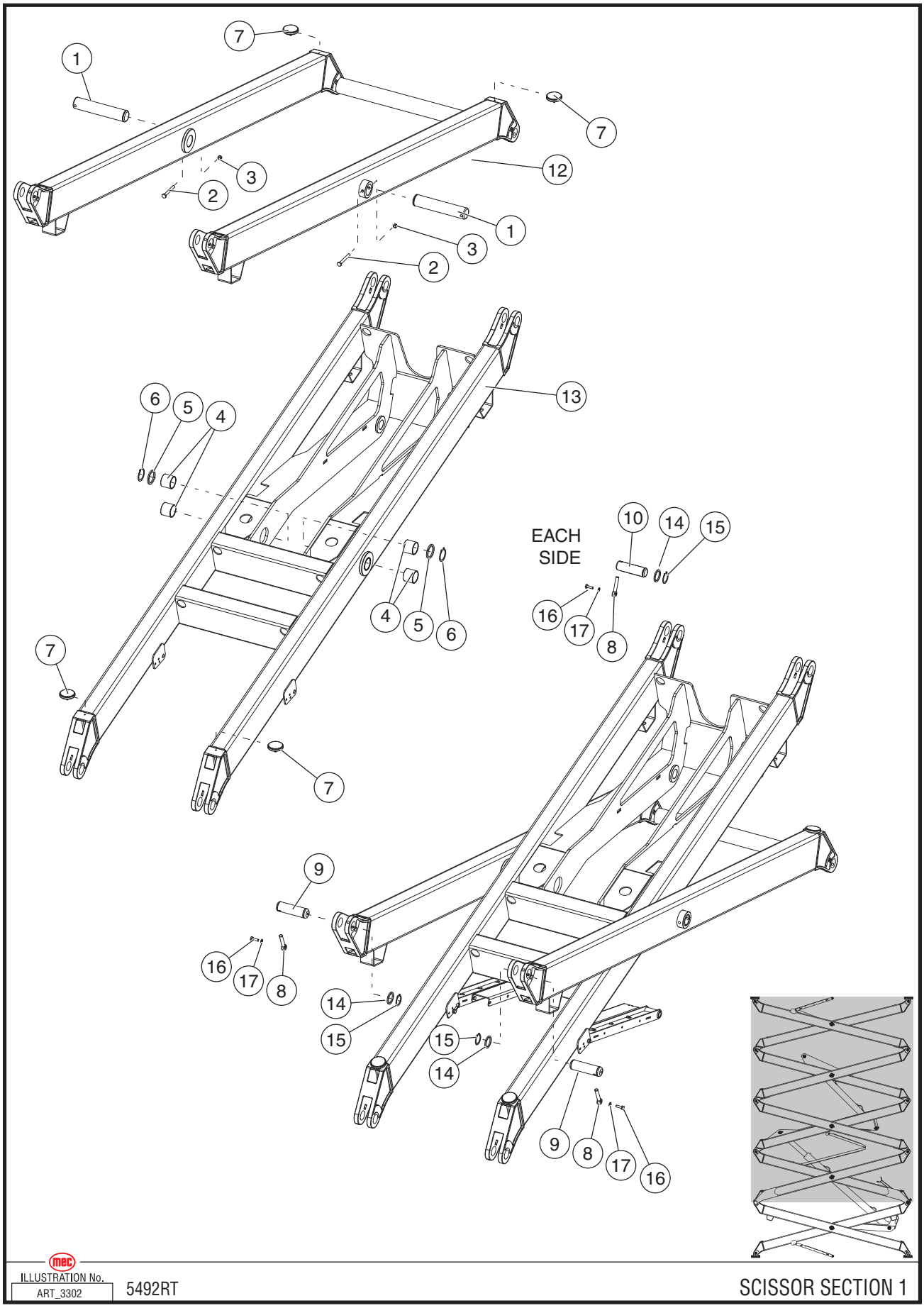

Item	Part Number	Description	Qty.
1	17900	Pin, Scissor Center	2
2	50324	Bolt, M12 x 110 GR10.9	2
3	50050	Nut, M12 Nylock	2
4	17916	Bearing	4
5	17917	Spacer	2
6	93734	Snap Ring	2
7	17926	Pad, Scissor	4
8	17928	Pin Retainer	3
9	17929	Pin	2
10	17564	Pin	2
11	--	--	--
12	17501	Outside Beam Weldment, Scissor Section 1	1
13	17502	Inside Beam Weldment, Scissor Section 1	1
14	17931	Spacer	4
15	93731	Snap Ring	4
16	50325	Bolt, M10-1.5 x 30 GR10.9	3
17	50006	Washer, M10 Nordlock	3

Scissor Section 2, 5492RT

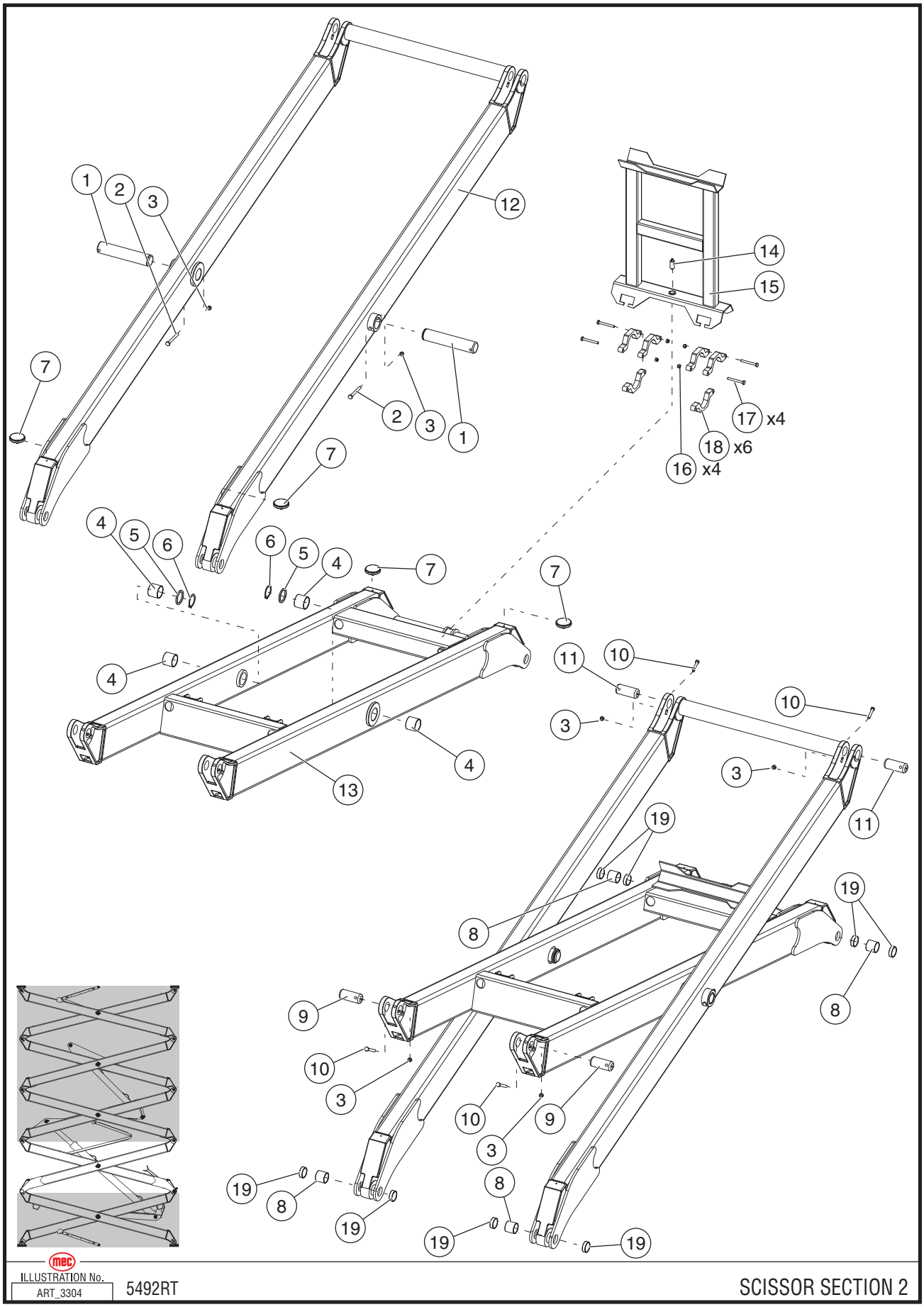

ILLUSTRATION No. ART_3304 5492RT SCISSOR SECTION 2

Item	Part Number	Description	Qty.
1	17900	Pin, Scissor Center	2
2	50324	Bolt, M12 x 110 GR10.9	2
3	50050	Nut, M12 Nylock	6
4	17916	Bearing	4
5	17917	Spacer	2
6	93734	Snap Ring	2
7	17926	Pad, Scissor	4
8	17921	Bearing	4
9	17901	Pin, Scissor End	2
10	50323	Bolt, M12 x 100 GR10.9	4
11	17901	Pin, Scissor End	2
12	17503	Outside Beam Weldment, Scissor Section 2	1
13	17504	Inside Beam Weldment, Scissor Section 2	1
14	17925	Spring Pin Assembly	1
15	17923	Weldment, Maintenance Stand	1
16	50053	Nut, M10 Nylock	4
17	50213	Bolt, M10 x 90	4
18	17909	Mount, Maintenance Stand	6
19	17934	Sleeve Bearing	8

Scissor Section 3, 5492RT

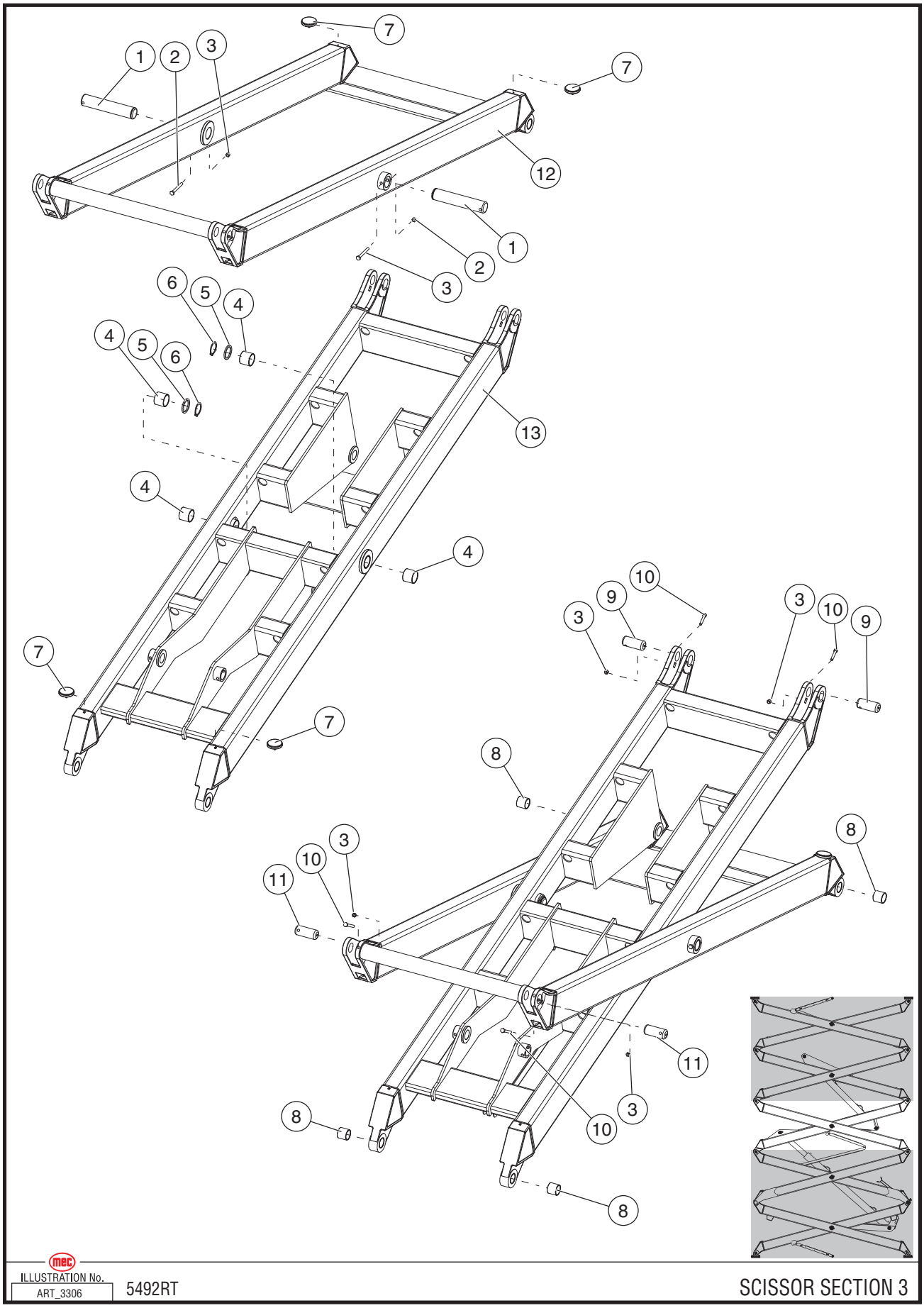

Item	Part Number	Description	Qty.
1	17900	Pin, Scissor Center	2
2	50324	Bolt, M12 x 110 GR10.9	2
3	50050	Nut, M12 Nylock	6
4	17916	Bearing	4
5	17917	Spacer	2
6	93734	Snap Ring	2
7	17926	Pad, Scissor	4
8	17921	Bearing	4
9	17901	Pin, Scissor End	4
10	50323	Bolt, M12 x 100 GR10.9	4
11	17918	Pin, Scissor End	1
12	17505	Outside Beam Weldment, Scissor Section 3	1
13	17506	Inside Beam Weldment, Scissor Section 3	1

Scissor Section 4, 5492RT

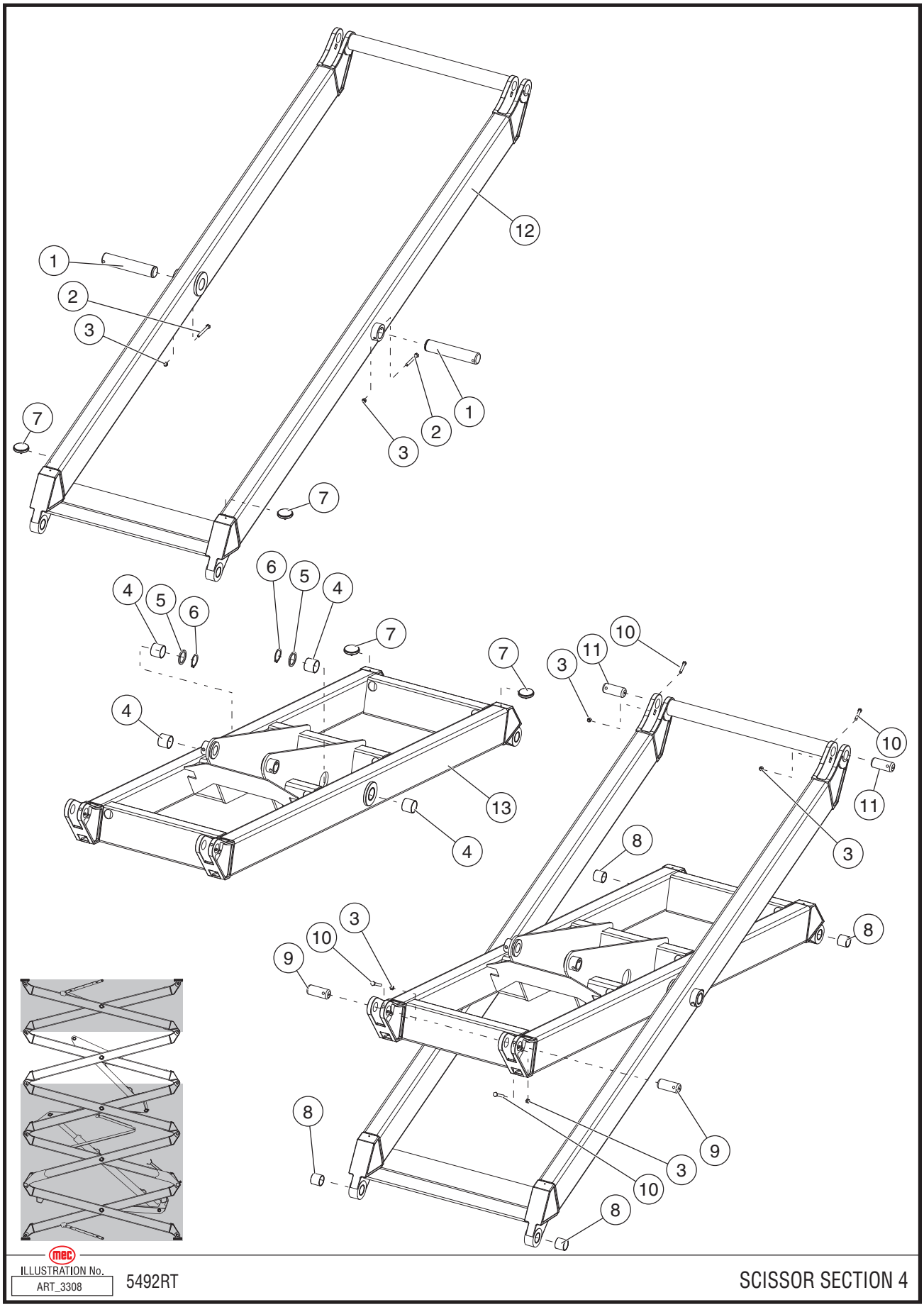

ILLUSTRATION No. ART_3308

5492RT

SCISSOR SECTION 4

Item	Part Number	Description	Qty.
1	17900	Pin, Scissor Center	2
2	50324	Bolt, M12 x 110 GR10.9	2
3	50050	Nut, M12 Nylock	6
4	17916	Bearing	4
5	17917	Spacer	2
6	93734	Snap Ring	2
7	17926	Pad, Scissor	4
8	17921	Bearing	4
9	17901	Pin, Scissor End	2
10	50323	Bolt, M12 x 100 GR10.9	4
11	17901	Pin, Scissor End	2
12	17507	Outside Beam Weldment, Scissor Section 4	1
13	17508	Inside Beam Weldment, Scissor Section 4	1

Scissor Section 5, 5492RT

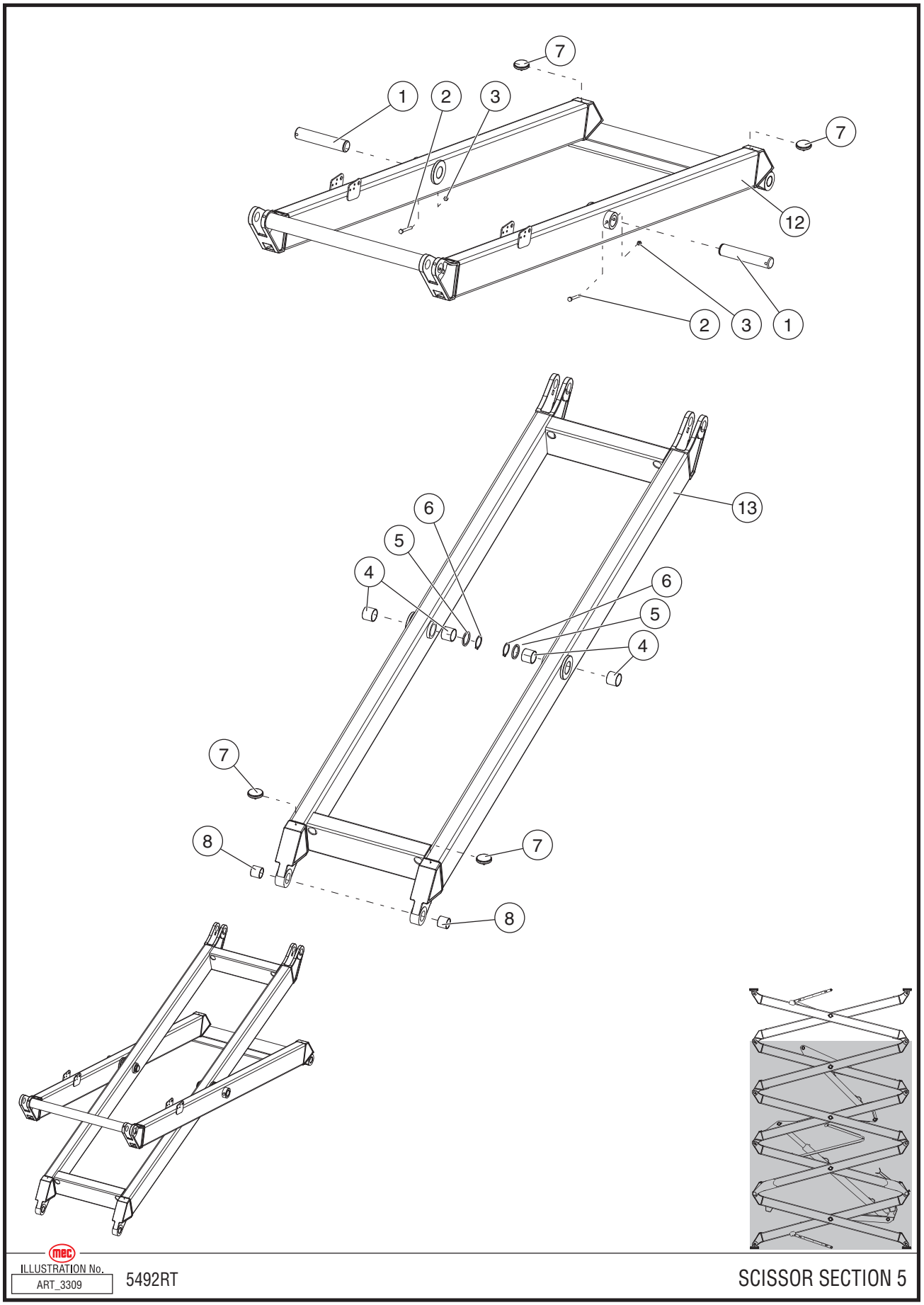

ILLUSTRATION No. ART_3309

5492RT

SCISSOR SECTION 5

Item	Part Number	Description	Qty.
1	17900	Pin, Scissor Center	2
2	50324	Bolt, M12 x 110 GR10.9	2
3	50050	Nut, M12 Nylock	6
4	17916	Bearing	4
5	17917	Spacer	2
6	93734	Snap Ring	2
7	17926	Pad, Scissor	4
8	17921	Bearing	4
9	--	--	--
10	--	--	--
11	--	--	--
12	17509	Outside Beam Weldment, Scissor Section 5	1
13	17510	Inside Beam Weldment, Scissor Section 5	1

Scissor Section 5 & Platform, 5492RT

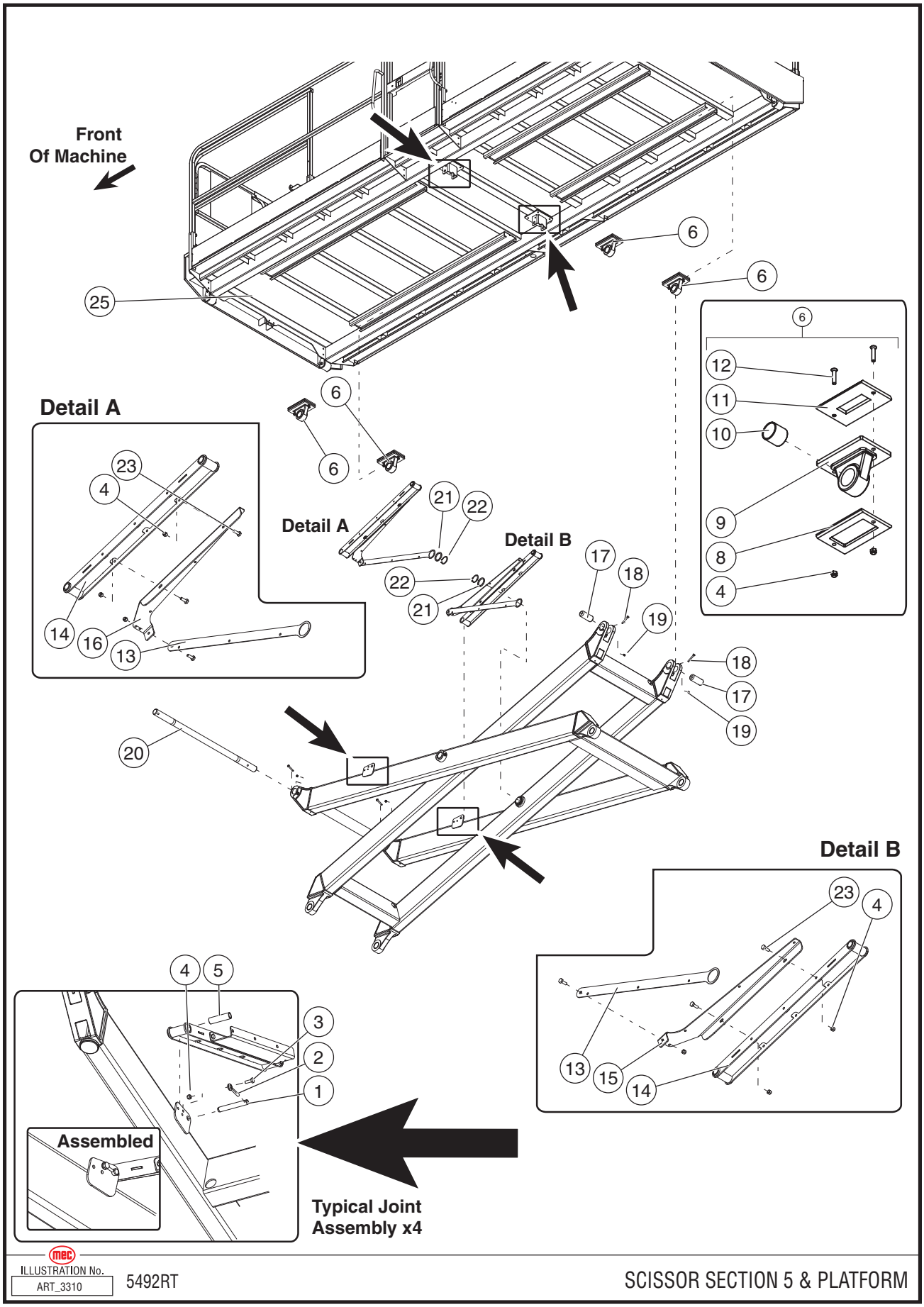

ILLUSTRATION No. ART_3310 5492RT SCISSOR SECTION 5 & PLATFORM

Item	Part Number	Description	Qty.
1	17905	Pin, Centering Linkage	4
2	18151	Banjo Pin	4
3	50034	Bolt, M10 x 30	4
4	50053	Nut, M10 Nylock	16
5	17920	Sleeve	4
6	17924	Assembly, Scissor Slide	4
7	--	--	--
8	17903	Pad, Inner Scissor Slide	4
9	17902	Casting, Scissor Slide	4
10	17921	Bearing	4
11	17904	Pad, Outer, Scissor Slide	4
12	50322	Screw, Tapered, M10 x 50	8
13	17915	Arm Component, Upper Centering Linkage	2
14	17922	M905231	2
15	17914	Arm Component, Upper Centering Linkage	1
16	17913	Arm Component, Upper Centering Linkage	1
17	17901	Pin, Scissor End	2
18	50323	Bolt, M12 x 100 GR10.9	4
19	50050	Nut, M12 Nylock	4
20	17918	Pin, Scissor End	1
21	17917	Spacer	2
22	92412	Snap Ring	2
23	50031	Bolt, M10 x 25	4
24	--	--	--
25	REF	Platform Assembly	--

REF - Reference

Cable Guide, 5492RT

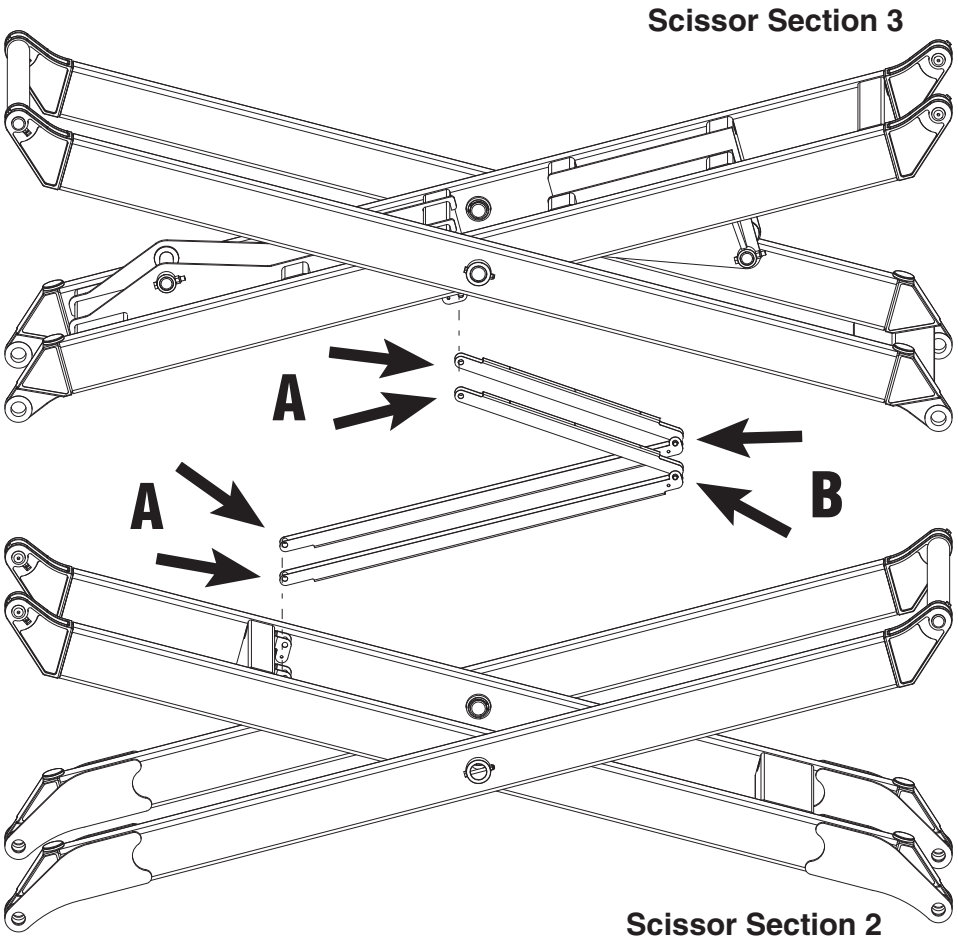

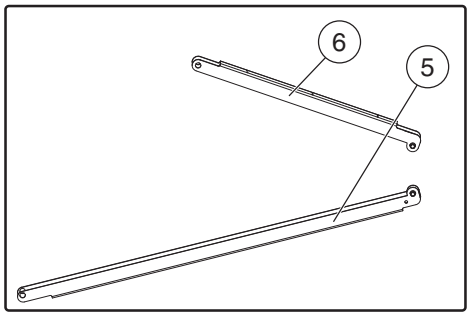

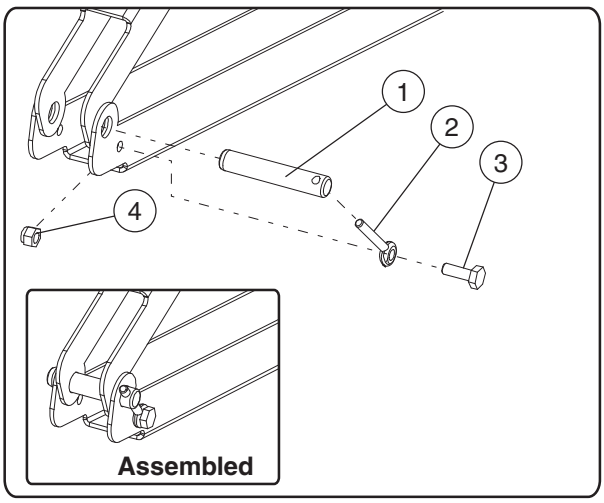

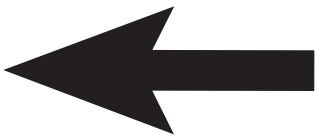

Typical Joint Assembly

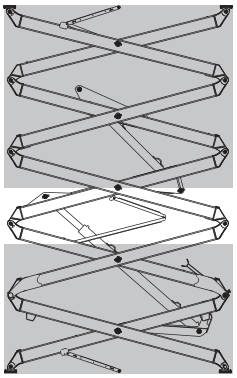

ILLUSTRATION No. ART_3311 5492RT

SCISSOR SECTION 2 & 3 - CABLE GUIDE

Item	Part Number	Description	Qty.
1	17911	A -- Pin, Cable Guide End Joint	4
	17919	B -- Pin, Cable Guide Center Joint	2
2	18151	M9052064 Banjo Pin	6
3	50034	Bolt, M10 x 30	6
4	50053	Nut, M10 Nylock	6
5	17566	Arm, Upper, Cable Guide	2
6	17567	Arm, Lower, Cable Guide	2

Scissor Structural Components, 3392RT

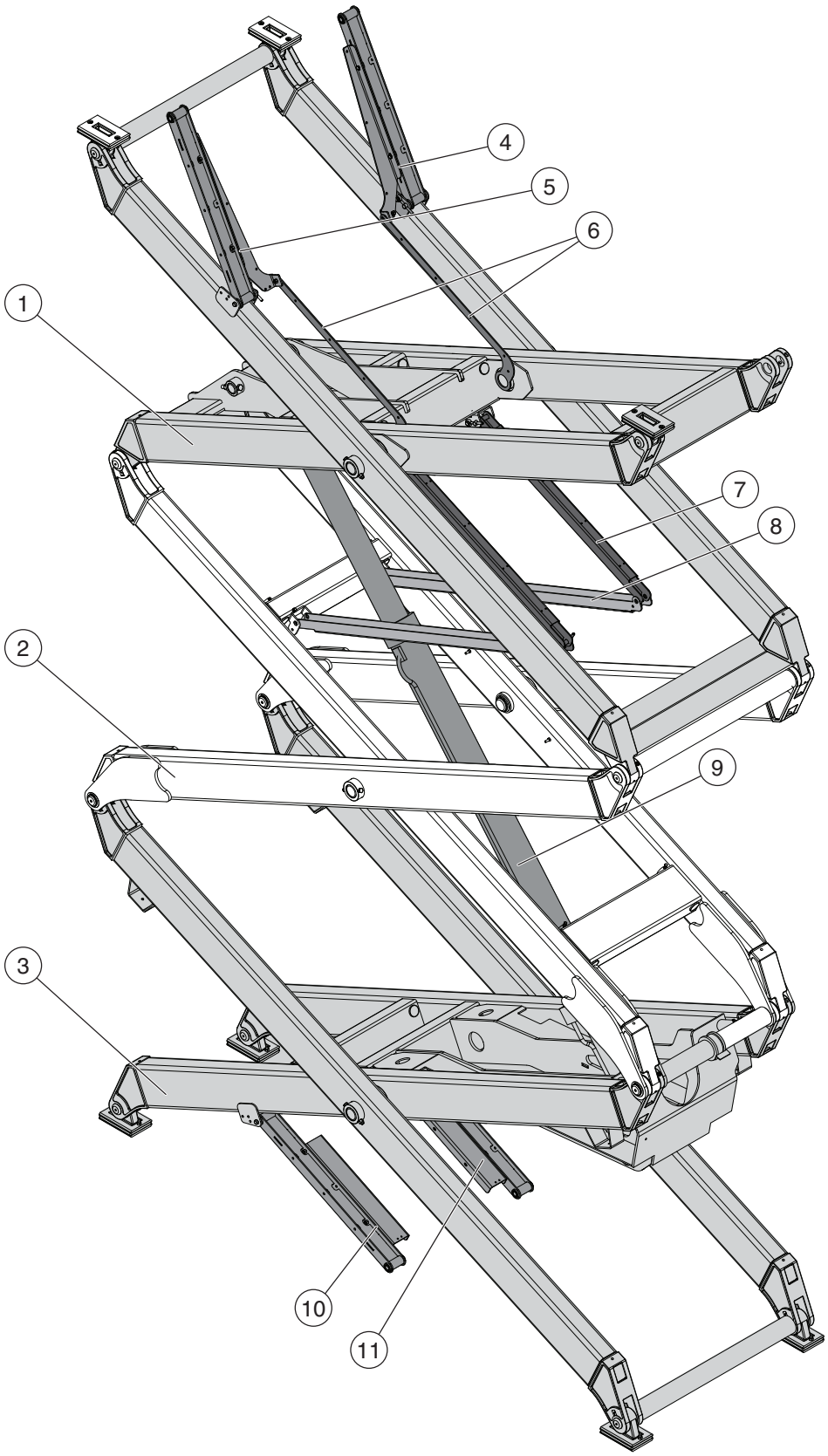

ILLUSTRATION No. ART_4761 92RT Series 3392RT-T Scissor Structural Components

Item	Part Number	Description	Qty.
1	17555	Scissor Section, Top	1
2	17552	Scissor Section, Center	1
3	17551	Scissor Section, Bottom	1
4	17557	Upper Centering Bar Assembly	1
5	17556	Upper Centering Bar Assembly	1
6	17560	Upper Cable Guide	2
7	17566	Cable Guide, Upper Arm	2
8	17567	Cable Guide, Lower Arm	2
9	REF	Lift Cylinder -- See Section 19 - Hydraulics	1
10	17558	Lower Centering Bar Assembly	1
11	17559	Lower Centering Bar Assembly	1

REF - Reference

Scissor End Connections, 3392RT

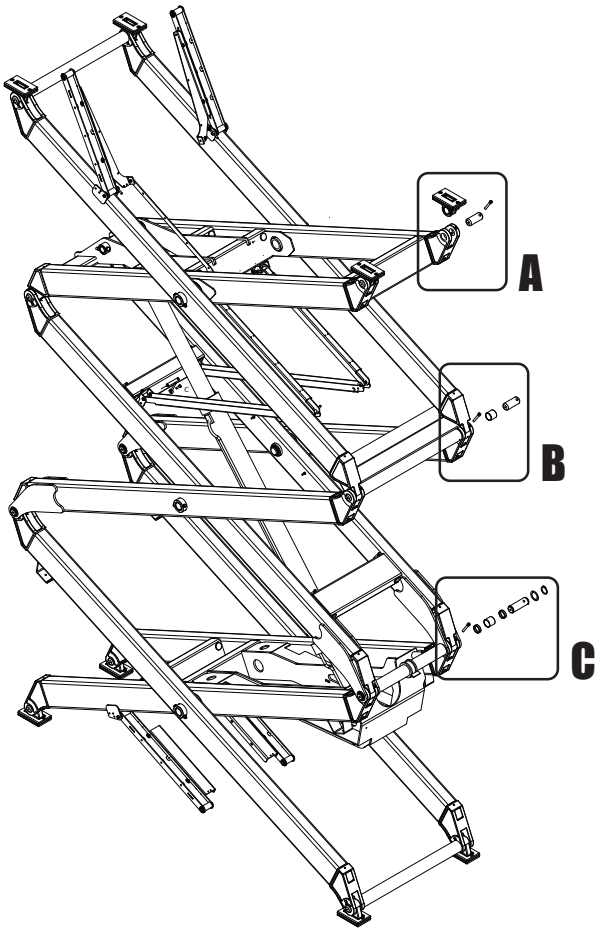

A
8 places

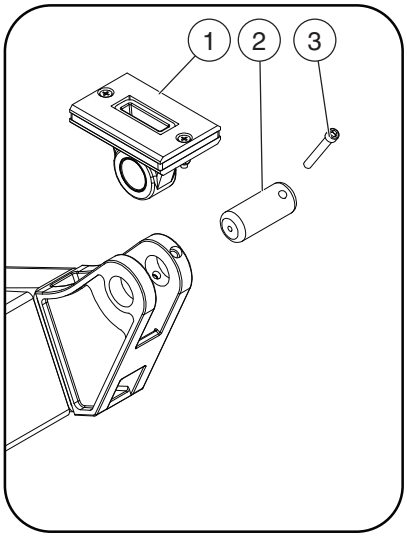

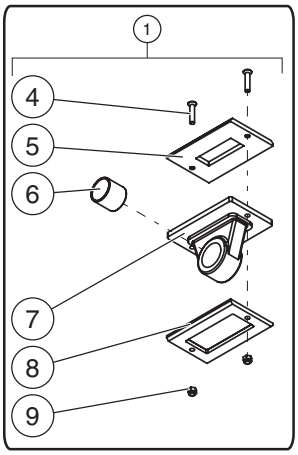

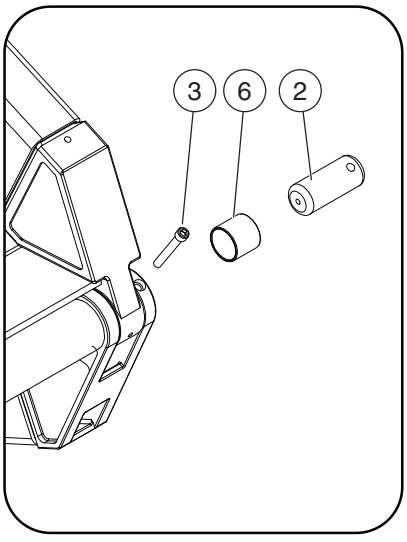

B
4 places

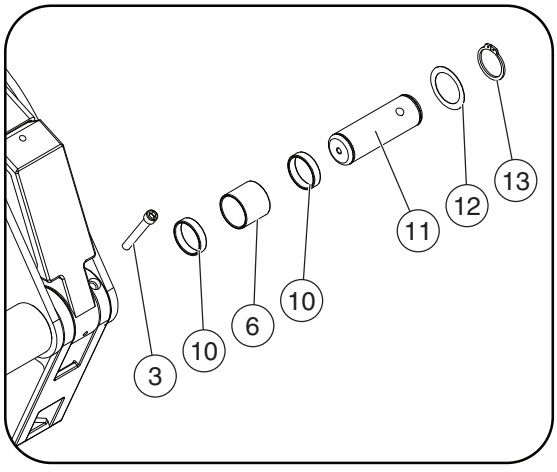

C
4 places

ILLUSTRATION No. ART_4762 92RT Series 3392RT-T Scissor End Connections

Item	Part Number	Description	Qty.
1	17924	Slide Assembly	8
2	17901	Pin, Scissor End	12
3	50105	Bolt, Socket Head M12 x 90	16
4	50322	Screw, Tapered, M10 x 50	16
5	17904	Pad, Outer, Scissor Slide	8
6	17921	Bearing	16
7	17902	Casting, Scissor Slide	8
8	17903	Pad, Inner Scissor Slide	8
9	50053	Nut, M10 Nylock	16
10	17917	Spacer	8
11	17564	Pin, Scissor End	4
12	93029	Shim	4
13	93731	Snap Ring	4

Scissor Center Connections, 3392RT

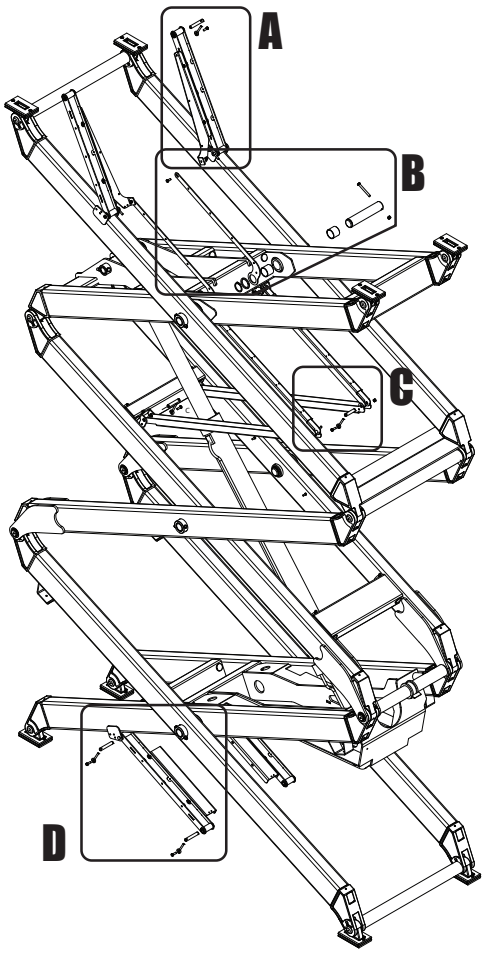

A
4 places

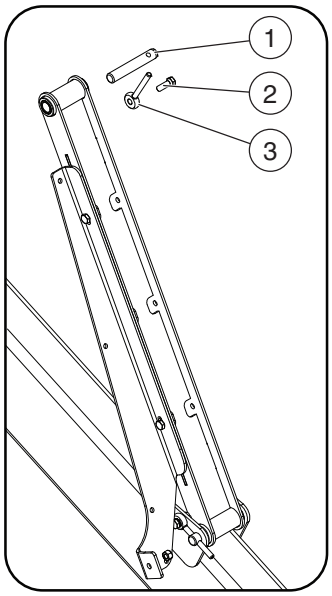

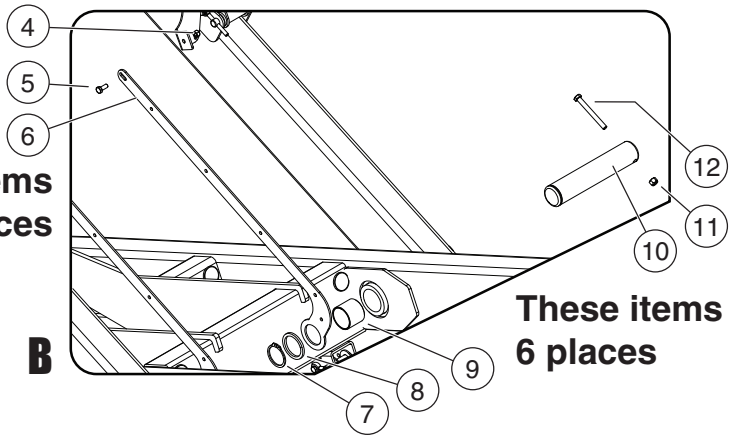

These items
2 places

These items
6 places

B

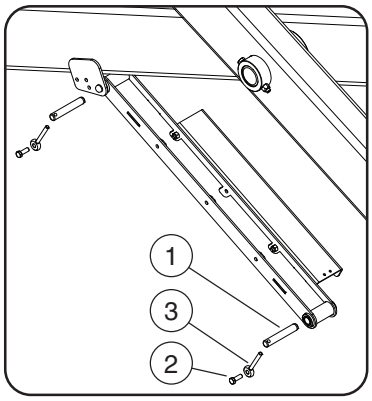

D
4 places

C
8 places

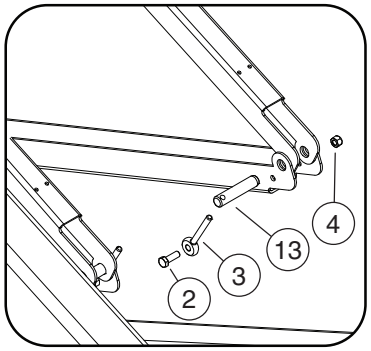

ILLUSTRATION No. ART_4763 92RT Series 3392RT-T Scissor Center Connections

Item	Part Number	Description	Qty.
1	17905	Pin, Centering Linkage	8
--	17920	Sleeve (not shown)	8
2	50034	Bolt, M10 x 30	10
3	18151	Pin Keeper	10
4	50053	Nut, M10 Nylock	8
5	50033	Bolt, M10 x 25	2
6	17560	Upper Cable Guide	2
7	93734	Snap Ring	6
8	17917	Spacer	6
9	17916	Bearing	6
10	17900	Pin, Scissor Center	6
11	50567	Nut, M12 Nylock	6
12	50566	Bolt, M12 x 110	6
13	17919	Pin, Cable Guide Center Joint	2
	17911	Pin, Cable Guide End Joint	4

Scissor Structural Components, 6092RT

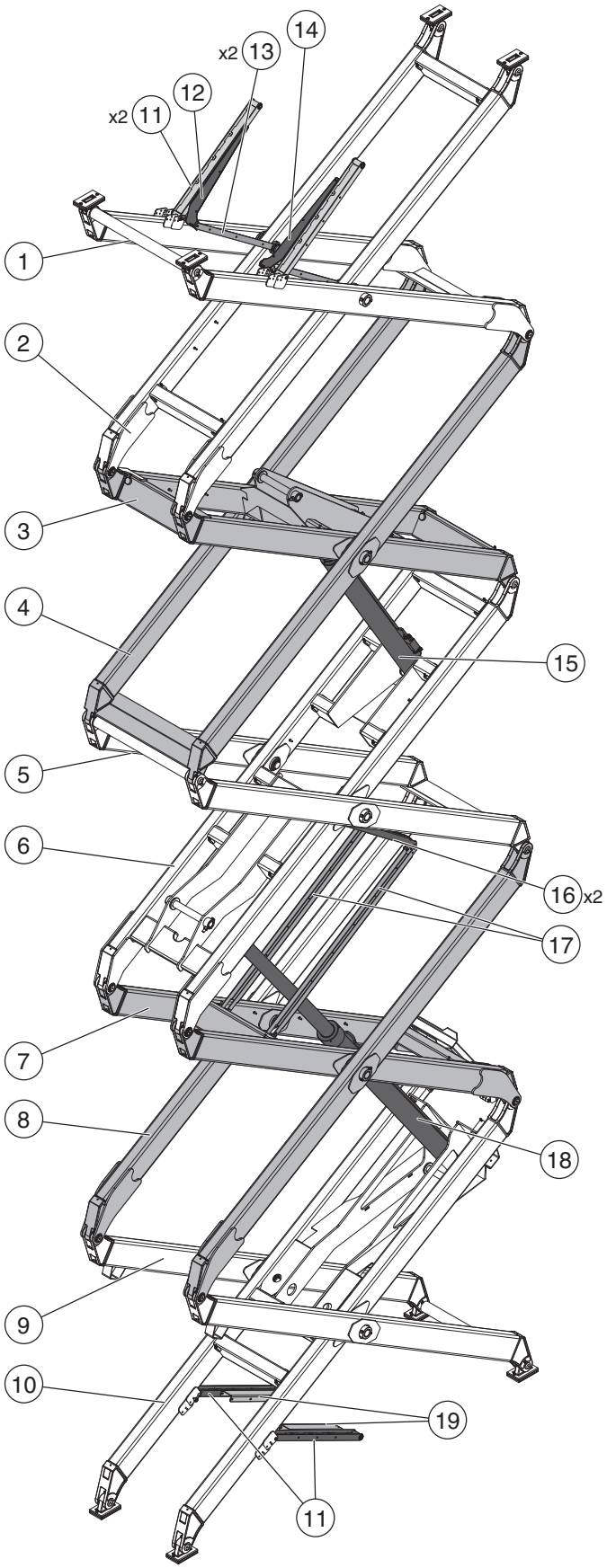

ILLUSTRATION No. ART_4764 92RT Series 6092RT Scissor Structural Components

Item	Part Number	Description	Qty.
1	17989	Outer Weldment, Scissor Section 5	1
2	17988	Inner Weldment, Scissor Section 5	1
3	17987	Inner Weldment, Scissor Section 4	1
4	17986	Outer Weldment, Scissor Section 4	1
5	17985	Outer Weldment, Scissor Section 3	1
6	17984	Inner Weldment, Scissor Section 3	1
7	17983	Inner Weldment, Scissor Section 2	1
8	17982	Outer Weldment, Scissor Section 2	1
9	17981	Outer Weldment, Scissor Section 1	1
10	17980	Inner Weldment, Scissor Section 1	1
11	17878	Centering Bar Assembly	4
12	17895	Cable Track Bracket, Right	1
13	17879	Cable Track Arm	2
14	17896	Cable Track Bracket, Left	1
15	REF	Upper Lift Cylinder -- See Section 19 - Hydraulics	1
16	17908	Cable Guide Channel	2
17	17978	Cable Guide Channel	2
18	REF	Lower Lift Cylinder -- See Section 19 - Hydraulics	1
19	17906	Centering Arm Channel	2

REF - Reference

Scissor End Connections, 6092RT

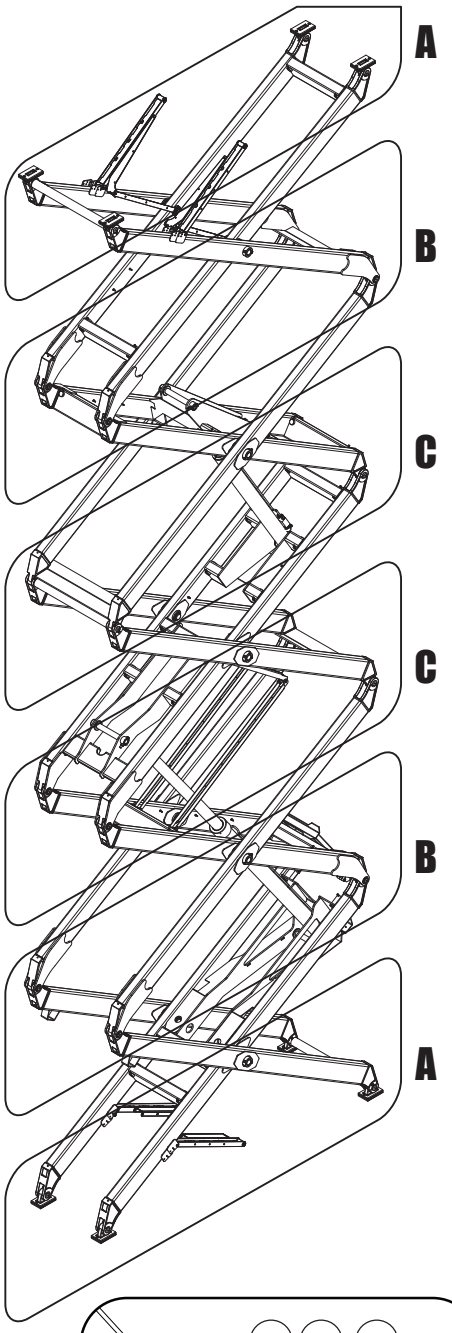

A
8 places

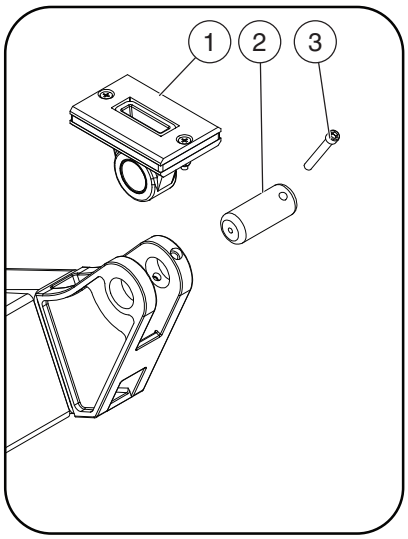

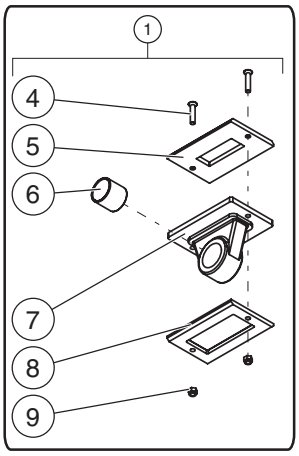

B
8 places

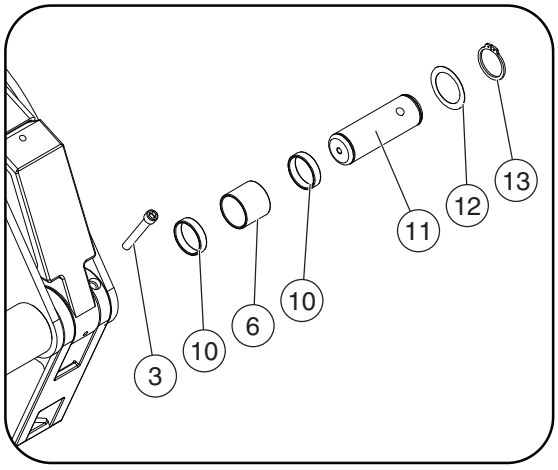

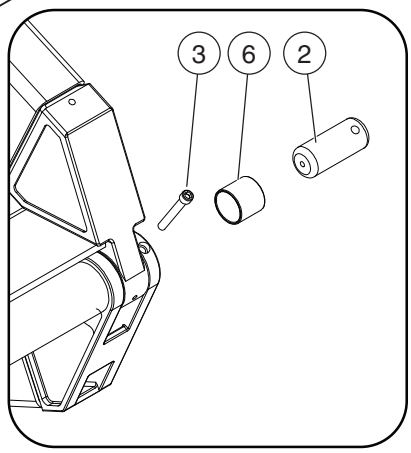

C
8 places

ILLUSTRATION No. ART_4765 92RT Series 6092RT Scissor End Connections

Item	Part Number	Description	Qty.
1	17924	Slide Assembly	8
2	17901	Pin, Scissor End	16
3	50105	Bolt, Socket Head M12 x 90	24
4	50322	Screw, Tapered, M10 x 50	16
5	17904	Pad, Outer, Scissor Slide	8
6	17921	Bearing	24
7	17902	Casting, Scissor Slide	8
8	17903	Pad, Inner Scissor Slide	8
9	50053	Nut, M10 Nylock	16
10	17917	Spacer	16
11	17564	Pin, Scissor End	8
12	93029	Shim	8
13	93731	Snap Ring	8

Scissor Center Connections, 6092RT

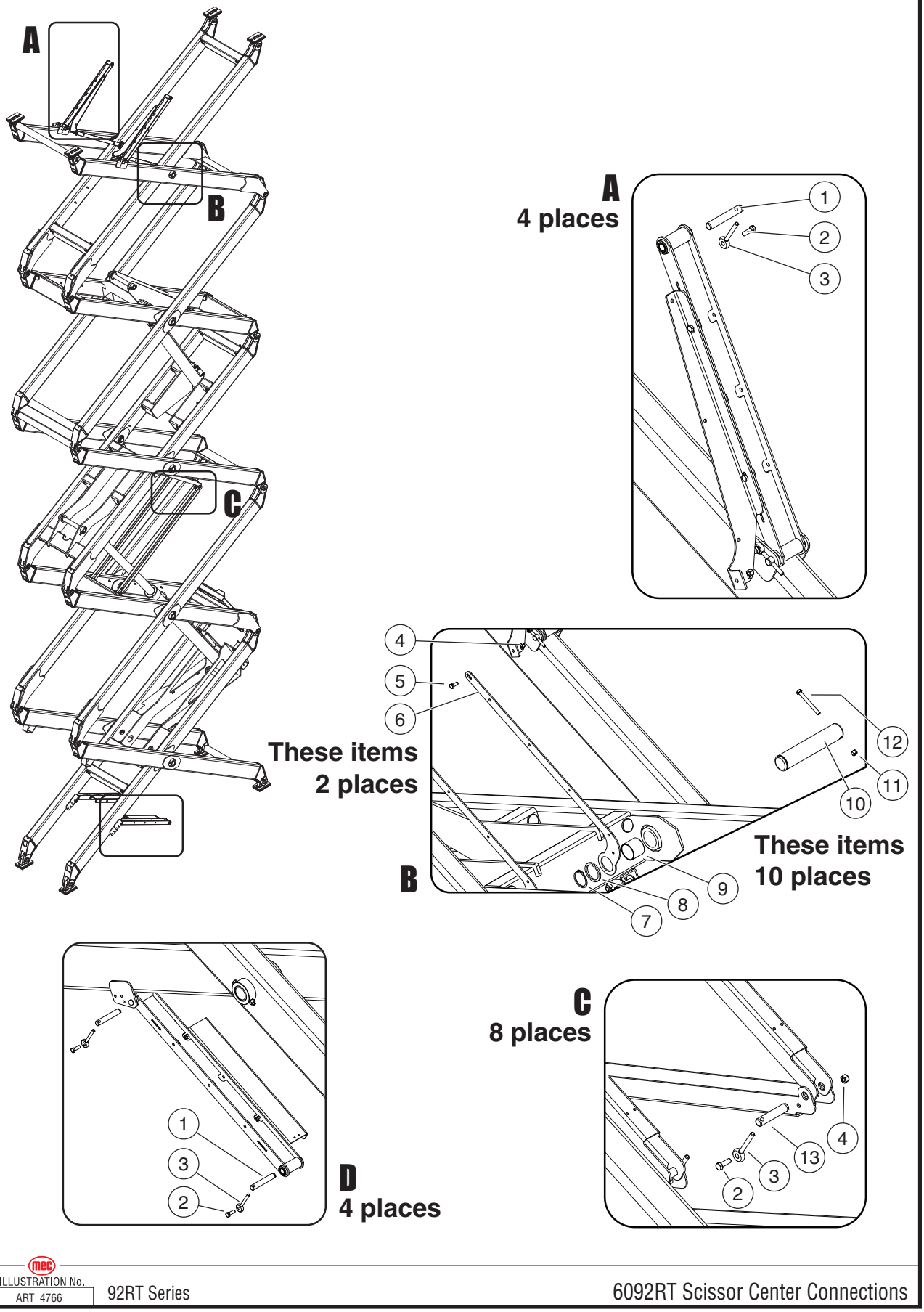

ILLUSTRATION No. ART_4766 92RT Series 6092RT Scissor Center Connections

Item	Part Number	Description	Qty.
1	17905	Pin, Centering Linkage	8
--	17920	Sleeve (not shown)	8
2	50034	Bolt, M10 x 30	16
3	18151	Pin Keeper	16
4	50053	Nut, M10 Nylock	8
5	50033	Bolt, M10 x 25	2
6	17560	Upper Cable Guide	2
7	93734	Snap Ring	10
8	17917	Spacer	10
9	17916	Bearing	10
10	17900	Pin, Scissor Center	10
11	50567	Nut, M12 Nylock	10
12	50566	Bolt, M12 x 110	10
13	17919	Pin, Cable Guide Center Joint	2
	17911	Pin, Cable Guide End Joint	4

Maintenance Stand

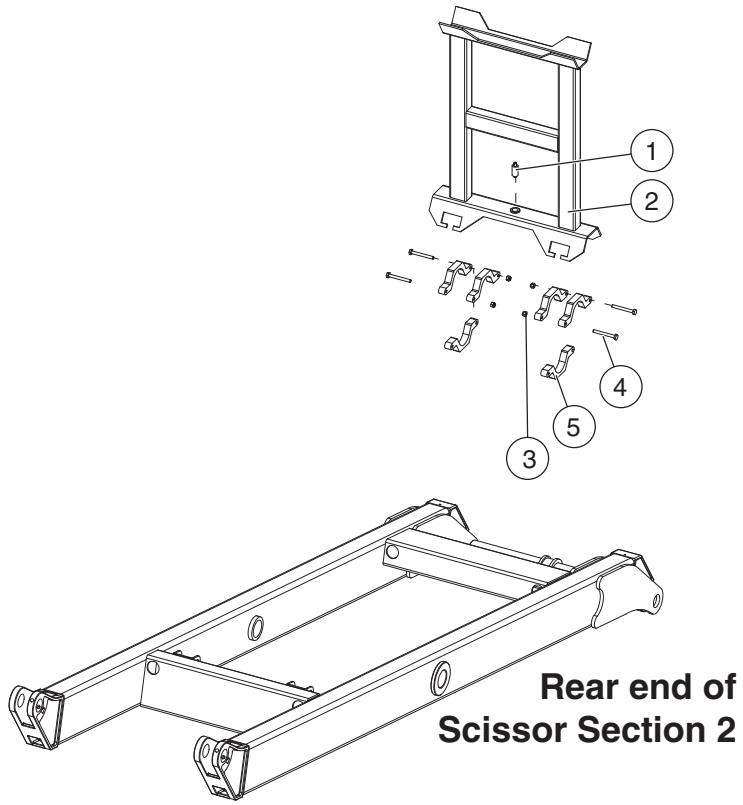

ILLUSTRATION No. ART_4767 92RT Series Maintenance Stand

Item	Part Number	Description	Qty.
1	17925	Spring Pin Assembly	1
2	17923	Weldment, Maintenance Stand	1
3	50053	Nut, M10 Nylock	4
4	50213	Bolt, M10 x 90	4
5	17909	Mount, Maintenance Stand	6

Lift Cylinder Mounting

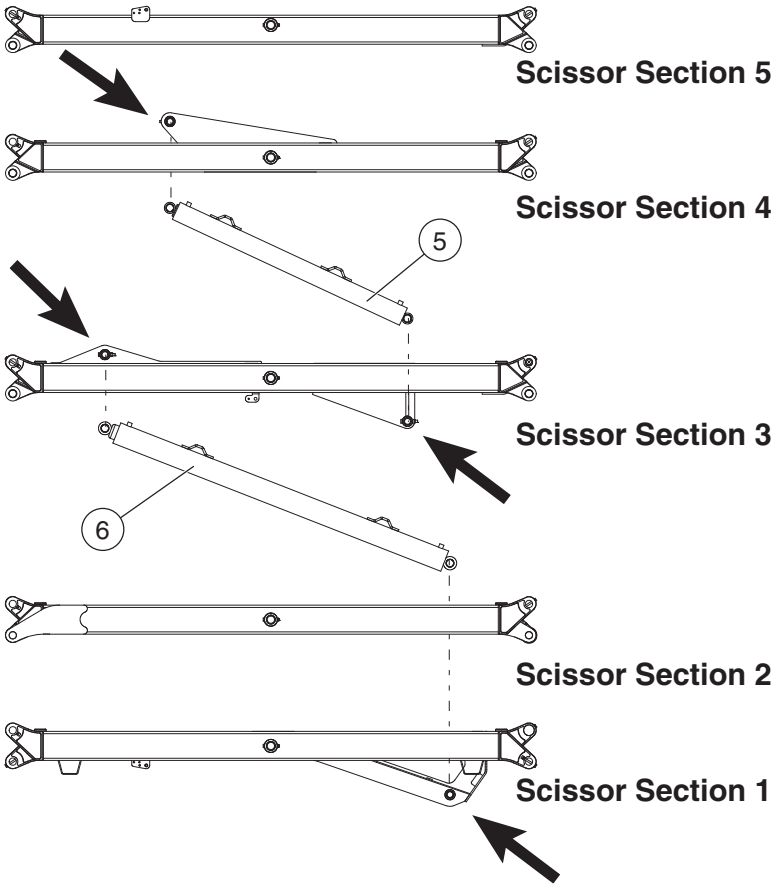

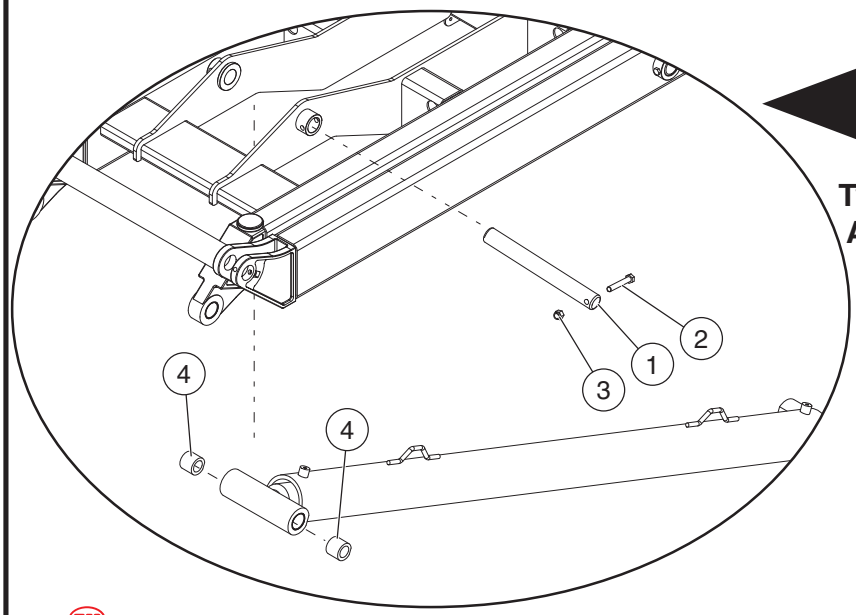

Typical Joint Assembly x4

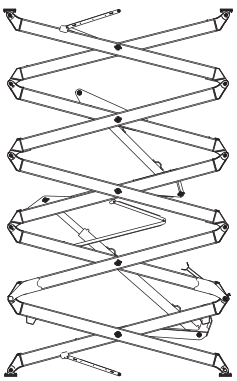

ILLUSTRATION No. ART_3312

92RT Series

LIFT CYLINDERS

Item	Part Number	Description	Qty.
1	17910	Pin, Cylinder End	4
2	50199	Bolt, M16 x 110	4
3	50051	Nut, M16 Nylock	4
4	17927	Bearing	8
5	REF	Upper Lift Cylinder, 5492RT & 6092RT only -- See Section 19 - Hydraulics	--
6	REF	Lower Lift Sylinder -- See Section 19 - Hydraulics	--

REF - Reference

Front Axle Assembly, 1 of 2, Early 5492RT Models w/ Pinned Front Axle

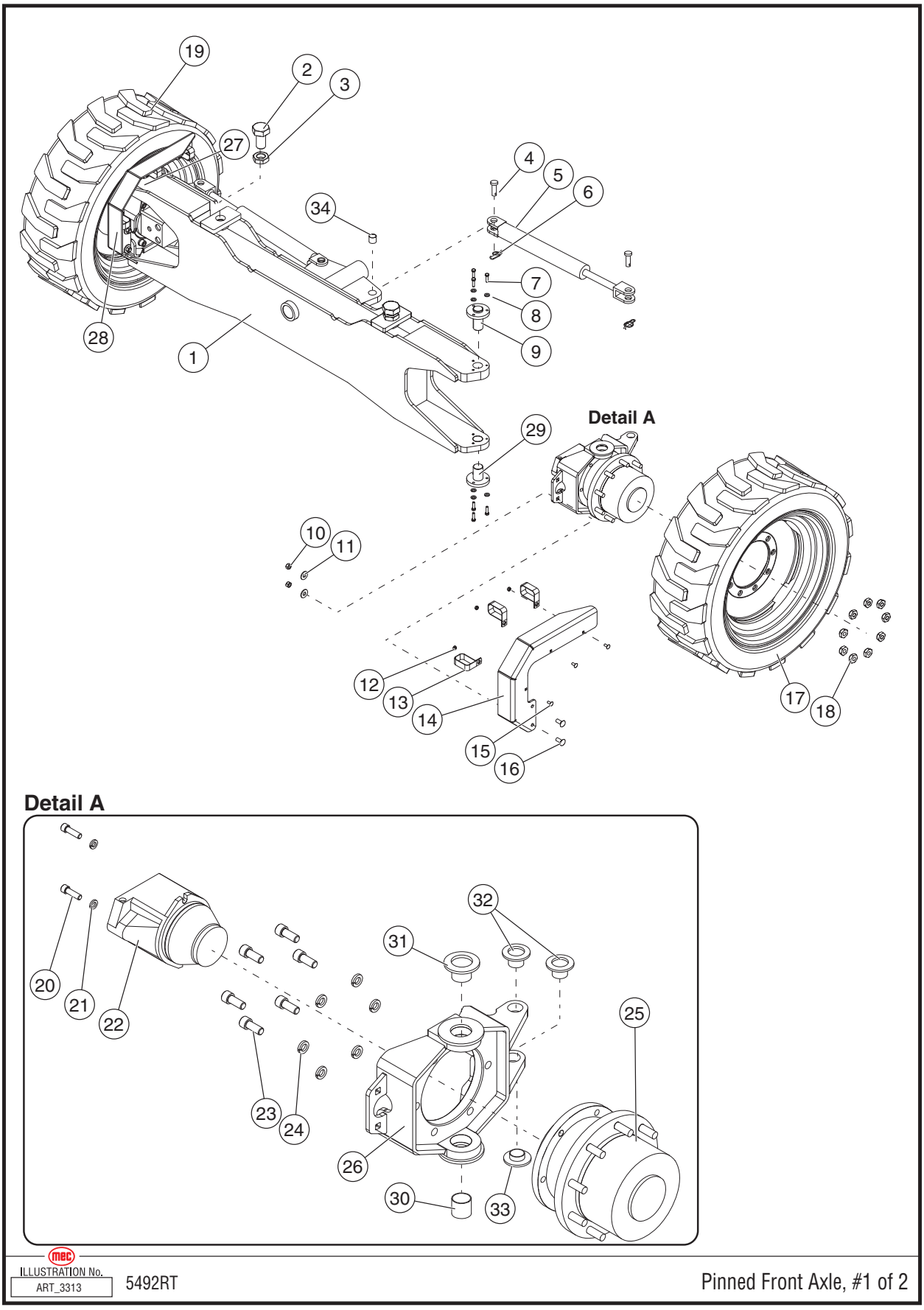

ILLUSTRATION No. ART_3313 5492RT

Pinned Front Axle, #1 of 2

Item	Part Number	Description	Qty.
--	84106	Front Axle Assembly	1
1	17383	Front Axle Weldment	1
2	50041	Bolt, HHCS M36-4.0 x 70mm	2
3	50046	Nut, M36-4.0 Jam	2
4	17491	Pin, 1” x 2.5”	6
5	REF	Steering Cylinder -- See Section 19 - Hydraulics	2
6	17492	Pin Retainer	6
7	50032	Bolt, M8-1.25 x 30 ZP	12
8	50001	Washer, M8 Std	12
9	17482	Axle, Top Trunion Pin	2
10	50201	Nut, 1/2-13 Nylock	4
11	50207	Washer, 1/2 Std	4
12	50203	Nut, 5/16-18 Nylock	6
13	92262	Hose Clamp	6
14	17643	Hose Guard, Left	1
15	50423	Bolt, Carriage 5/16-18 x 1	6
16	17724	Bolt, Carriage 1/2-13 x 1.25	4
17	17953	Wheel & Tire LSW Left	1
	91902	Wheel & Tire LSW Left Non-Marking	1
18	91420	Nut, Lug 5/8-18 UNF	18
19	17954	Wheel & Tire LSW Right	1
	91903	Wheel & Tire LSW Right Non-Marking	1
20	50055	Bolt, SHCS 7/16-14 x 1.5 Gr8	4
21	50252	Washer, 7/16 Spring Lock	4
22	REF	Wheel Motor -- See Section 19 - Hydraulics	2
23	50056	Bolt, SHCS 5/8-11 x 1.5 Gr8	12
24	50253	Washer, 5/8 Spring Lock	12
25	17958	Hub, Planetary Drive w/ Brake	2
--	92528	Seal Kit	--
--	92529	Brake Release Parts Kit	--
26	17385	Steering Yoke, Left Hand	1
27	17384	Steering Yoke, Right Hand -- shown assembled	1
28	17642	Hose Guard, Right	1
29	17483	Axle, Bottom Trunion Pin	2
30	17487	Sleeve Bearing	2
31	17488	Flange Bearing	2
32	17489	Flange Bearing	2
33	17932	Flange Bearing	2
34	17933	Sleeve Bearing	2

REF - Reference

Front Axle Assembly, 2 of 2, Early 5492RT Models w/ Pinned Front Axle

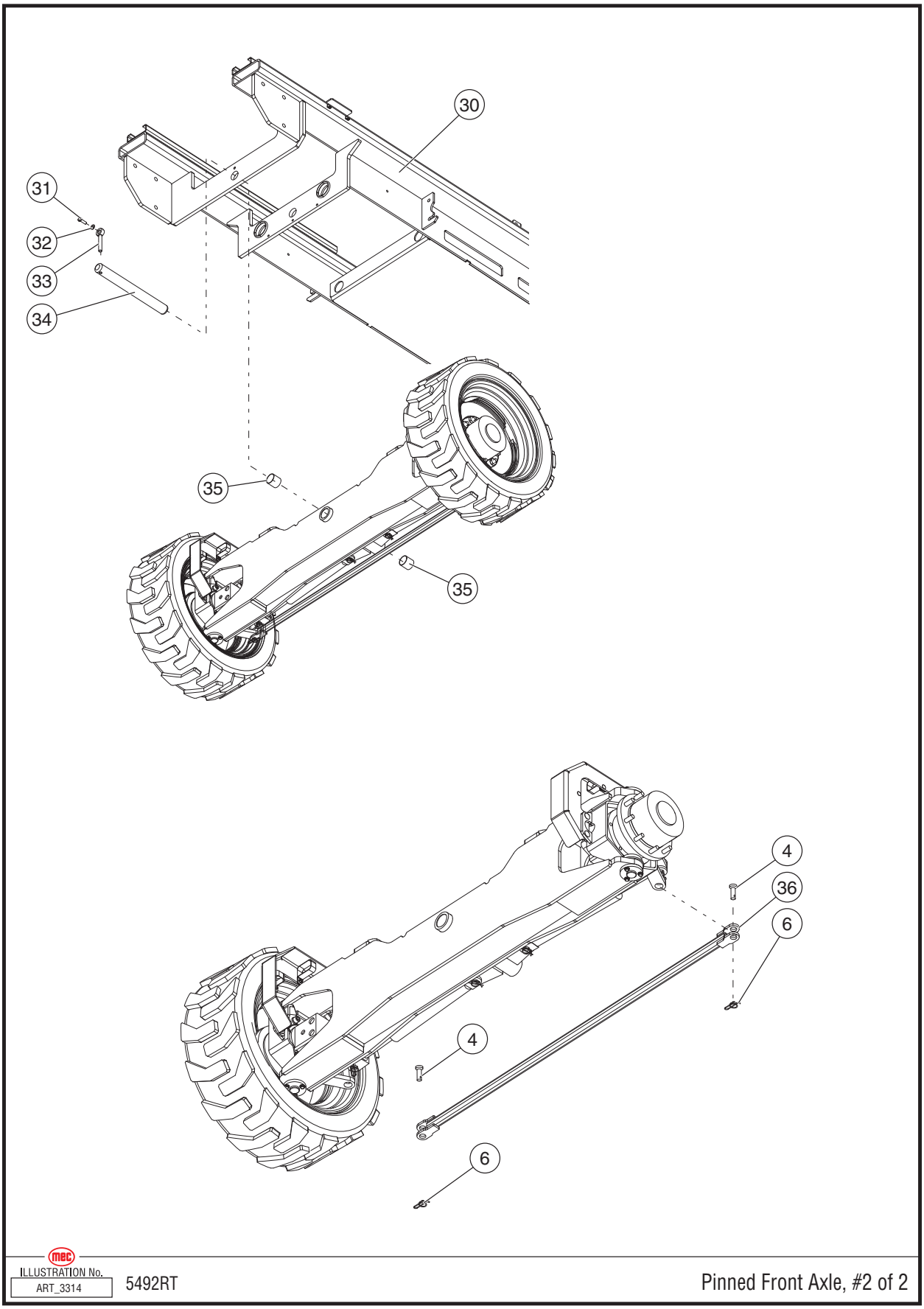

ILLUSTRATION No. ART_3314 5492RT Pinned Front Axle, #2 of 2

4	17491	Pin	6
--	--	--	--
6	17492	Pin Retainer	6
--	--	--	--
30	REF	Chassis	--
31	50236	Bolt, M12 x 40	1
32	50003	Washer, M12 Std	1
33	17405	Pin Retainer, 1/2”	1
34	17403	Pin, Front Axle	1
35	6669	Bearing, 2” x 2” LG	2
36	17453	Drag Link Weldment	1

REF - Reference

Front Axle Assembly, Later 92RT Models w/ Welded Front Axle

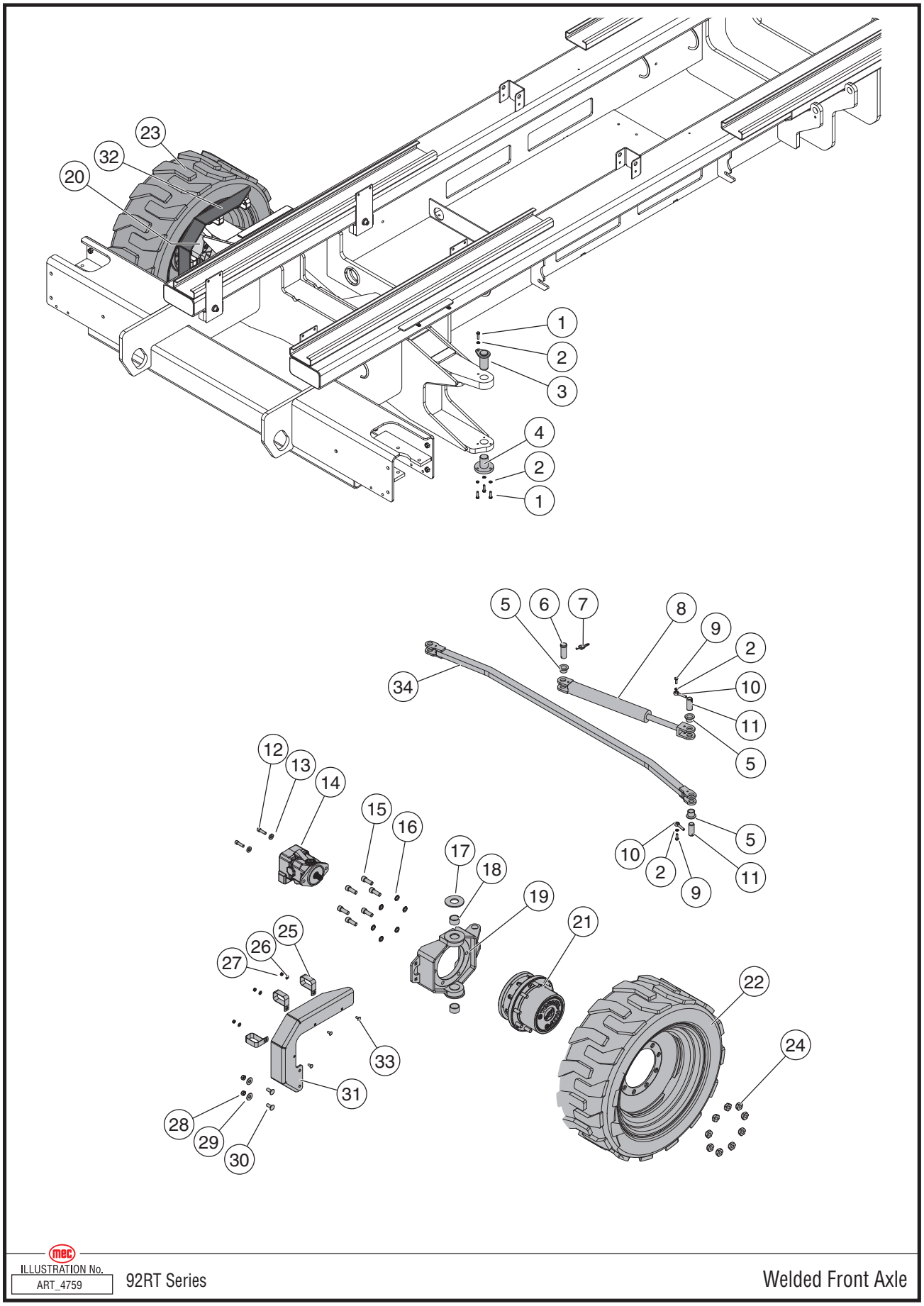

ILLUSTRATION No. ART_4759

92RT Series

Welded Front Axle

Item	Part Number	Description	Qty.
1	50032	Bolt, M8 x 30	4
2	50200	Washer, M8 Nordlock	8
3	21401	King Pin	2
4	17483	Trunion Pin	2
5	17489	Flange Bearing	6
6	17491	Clevis Pin	2
7	17492	Rue Clip	2
8	17963	Steering Cylinder -- See Section 19 - Hydraulics	2
9	50031	Bolt, M8 x 25	4
10	18165	Keeper Pin	4
11	17979	Steering Yoke Pin	4
12	50055	Bolt, Socket Head 7/16 x 1.5	4
13	11176	Washer, 1/2” Heavy	4
14	REF	Wheel Motor -- See Section 19 - Hydraulics	2
15	50057	Bolt, Socket Head 5/8 x 1.75	12
16	50249	Washer, M16 Nordlock	12
17	17490	Thrust Washer	2
18	17487	Bearing	4
Steering Yokes -- 6092RT ~#12900030			
19	17532	Steering Yoke, Left Hand	1
20	17533	Steering Yoke, Right Hand	1
Steering Yokes -- Later 5492RT, All 3392RT, 6092RT #12900031~			
19	17532	Steering Yoke, Left Hand	1
20	17533	Steering Yoke, Right Hand	1
21	91400	**3392RT ~#13600044** Hub, Planetary Drive w/ Brake	2
	91562	Hub Seal Kit	--
	91563	Brake Seal Kit	--
	91564	Brake Lining Kit (includes 91563)	--
	93624	**3392RT #13600045~** Hub, Planetary Drive w/ Brake	2
	94697	Seal Kit	1
	17958	5492RT -- Later Machines w/ Welded Front Axle Hub, Planetary Drive w/ Brake	2
	92528	Seal Kit	--
	92529	Brake Release Parts Kit	--
	93624	6092RT - Hub, Planetary Drive w/ Brake	2
	94697	Seal Kit	1
22	17953	Wheel & Tire LSW Left	1
	91902	Wheel & Tire LSW Left Non-Marking	1
	94804	6092 Models - Left Wheel & Tire Assembly (From Serial #12900263)	1
23	17954	Wheel & Tire LSW Right	1
	91903	Wheel & Tire LSW Right Non-Marking	1
	94805	6092 Models - Right Wheel & Tire Assembly (From Serial #12900263)	1
24	50266	Lug Nut, 5/8-18	18
25	50203	Nut, 5/16 Nylock	6
26	5217	Washer, 5/16 Std	6
27	92662	Hose Clamp	6
28	50201	Nut, 1/2 Nylock	4
29	50207	Washer, 1/2 Std	4
30	50432	Carriage Bolt, 1/2 x 1.25	4
31	17643	Hose Guard, Left Side	1
32	17642	Hose Guard, Right Side	1
33	50204	Carriage Bolt, 5/16 x /75	6
34	17542	Drag Link Weldment	1

REF - Reference

Rear Axle Assembly, 5492RT

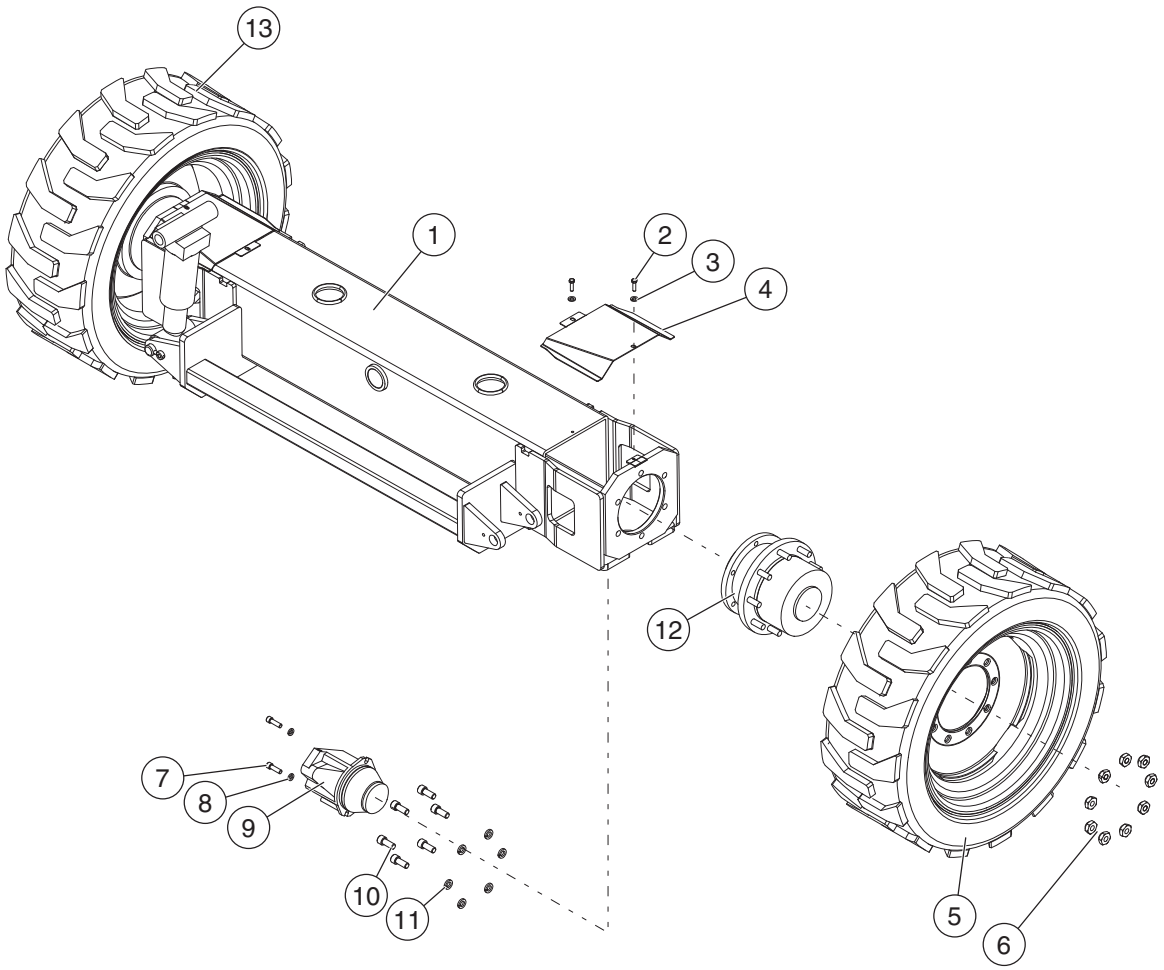

ILLUSTRATION No. ART_3315

92RT Series

Rear Axle, 5492RT

Item	Part Number	Description	Qty.
--	84107	Rear Axle Assembly	1
1	17020	Rear Axle Weldment	1
2	50258	Bolt, M8 x 10	4
3	50001	Washer, M8 Std	4
4	17022	Cover, Rear Motor	2
5	17953	Wheel & Tire LSW Left	1
6	91420	Nut, Lug 5/8-18 UNF	18
7	50055	Bolt, SHCS 7/16-14 x 1.5 Gr8	4
8	50252	Washer, 7/16 Spring Lock	4
9	REF	Wheel Motor -- See Section 19 - Hydraulics	2
10	50056	Bolt, SHCS 5/8-11 x 1.5 Gr8	12
11	50253	Washer, 5/8 Spring Lock	12
12	17958	Hub, Planetary Drive w/ Brake	2
--	92528	Seal Kit	--
--	92529	Brake Release Parts Kit	--
13	17954	Wheel & Tire LSW Right	1

REF - Reference

Rear Axle Assembly, 3392RT, 6092RT

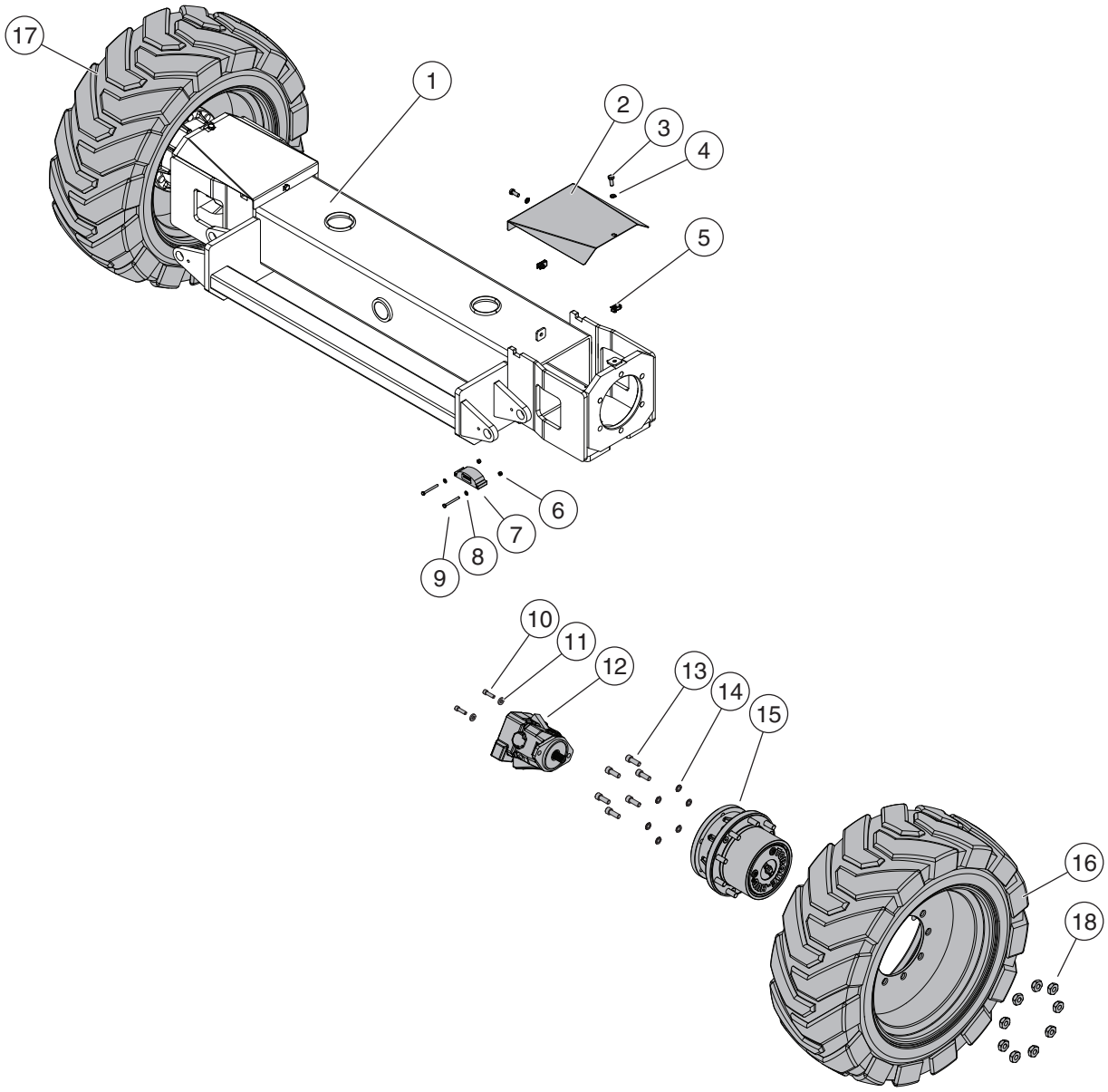

ILLUSTRATION No. ART_4760

92RT Series

Rear Axle, 3392RT-T, 6092RT

Item	Part Number	Description	Qty.
1	17871	Rear Axle Weldment	1
2	17873	Rear Motor Cover	2
3	50033	Bolt, M10 x 25	4
4	50006	Washer, M10 Nordlock	4
5	92098	Clip Nut, M10 x .375	4
6	50047	Nut, M6 Mylock	2
7	19308	Angle Transducer CAN-Tilt 162 - Old	1
	92202	Can-Tilt PG Trionics #2 (21800-162) w/ Deutsch Connector - New	1
--	22538	Adapter, Can-Tilt Plug	1
8	50000	Washer, M6 Std	2
9	50134	Bolt, M6 x 60	2
10	50055	Bolt, Socket Head 7/16 x 1.5	4
11	11176	Washer, 1/2” Heavy	4
12	REF	Wheel Motor -- See Section 19 - Hydraulics	2
13	50056	Bolt, Socket Head 5/8 x 1.5	12
14	50249	Washer, M16 Nordlock	12
15	91400	**3392RT ~#13600044** Hub, Planetary Drive w/ Brake	2
	91562	Hub Seal Kit	--
	91563	Brake Seal Kit	--
	91564	Brake Lining Kit (includes 91563)	--
	93624	3392RT #13600045~ Hub, Planetary Drive w/ Brakev	2
	17958	5492RT -- Later Machines w/ Welded Front Axle Hub, Planetary Drive w/ Brake	2
	92528	Seal Kit	--
	92529	Brake Release Parts Kit	--
	93624	6092RT Hub, Planetary Drive w/ Brake	2
16	17953	Wheel & Tire LSW Left	1
	91902	Wheel & Tire LSW Left Non-Marking	1
	94804	6092 Models - Left Wheel & Tire Assembly - From Serial # S0 125	1
17	17954	Wheel & Tire LSW Right	1
	91903	Wheel & Tire LSW Right Non-Marking	1
	94805	6092 Models - Right Wheel & Tire Assembly - From Serial # S0 125	1
18	91420	Nut, Lug 5/8-18 UNF	18

REF - Reference

Rear Axle/Chassis Articulation

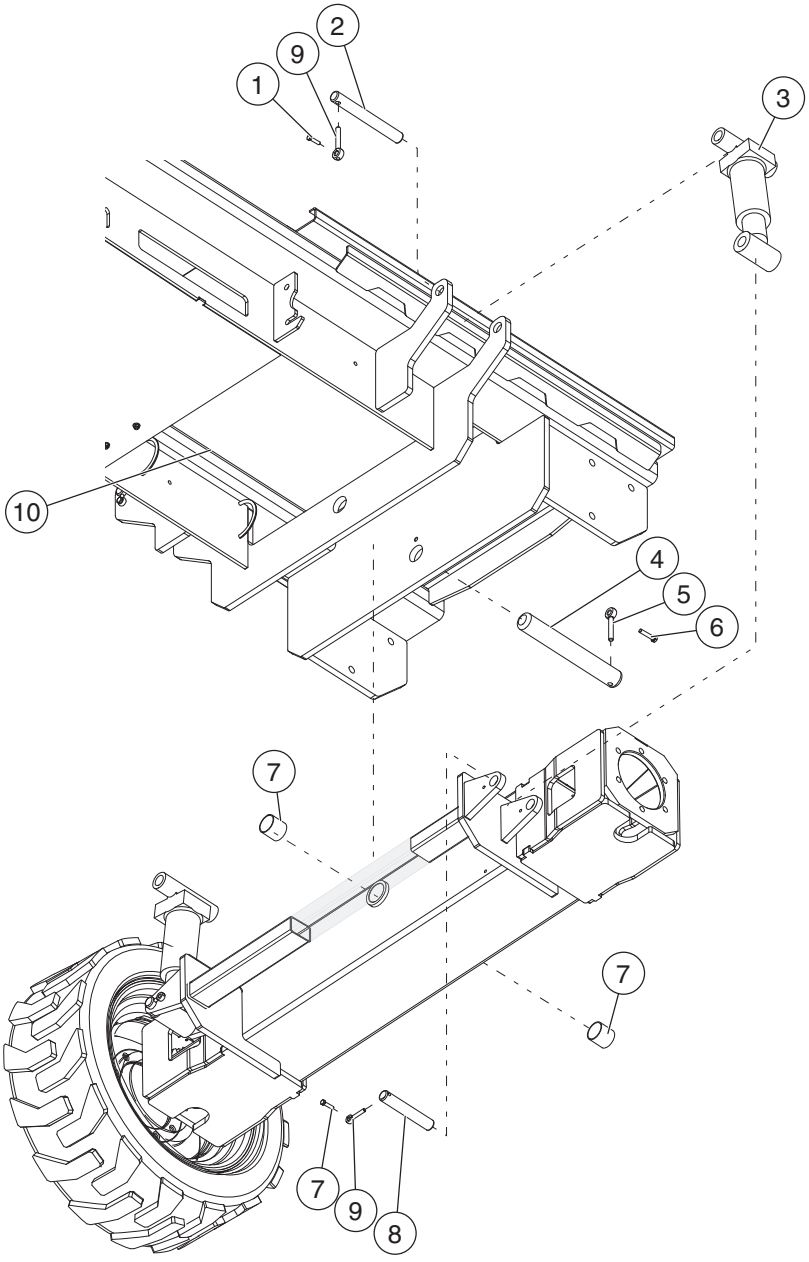

ILLUSTRATION No. ART_3316 92RT Series Rear Axle/Chassis Articulation

Item	Part Number	Description	Qty.
1	50034	Bolt, M10 x 30	4
2	17325	Cylinder Pin	2
3	REF	Cylinder, Axle Lock -- See Section 19 - Hydraulics	2
4	17404	Axle Pin	1
5	17405	Pin Retainer, .5”	1
6	50040	Bolt, M12 x 35	1
7	92110	Bearing, 2” x 2” LG	2
8	17678	Cylinder Pin	2
9	17654	Pin Retainer	4
10	REF	Chassis	--

REF - Reference

Hydraulic Components

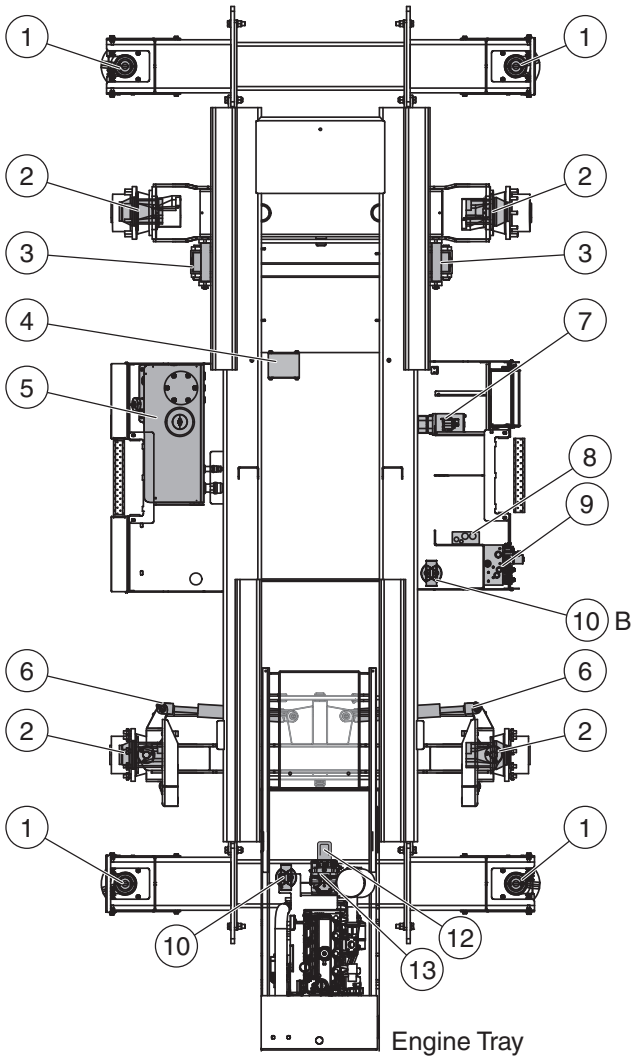

Engine Tray
Shown Extended

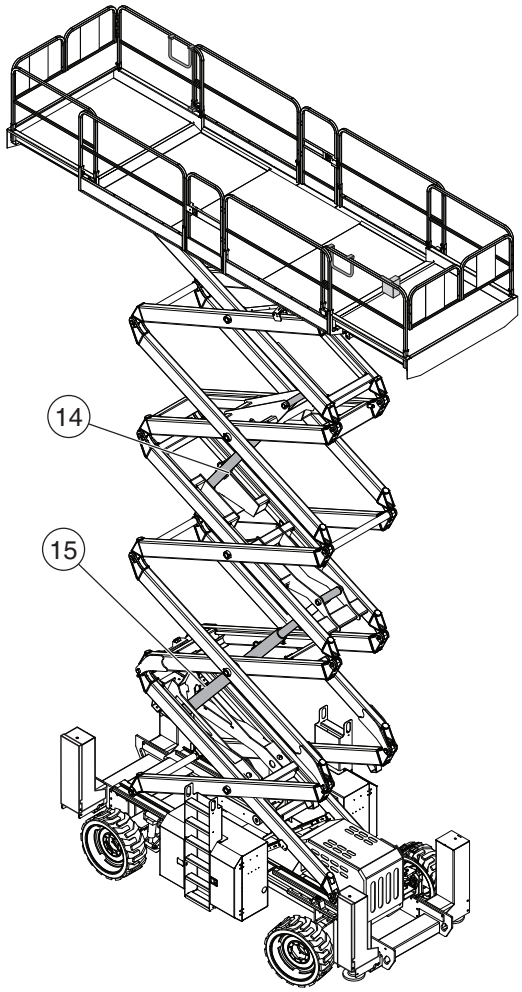

ILLUSTRATION No.
ART_3486

92RT Series

HYDRAULIC SYSTEM COMPONENTS

Item	Part Number	Description	Qty.
1	17317	Cylinder, Outrigger	4
2	REF	Motor, Wheel	4
3	17469	Cylinder, Axle Lock	2
4	REF	Manifold, Traction -- 5492RT, early 3392RT only	1
5	REF	Tank, Hydraulic Fluid	1
6	17318	Cylinder, Steer	2
7	17973	Auxiliary Power Unit	1
8	18401	Manifold, Brake	1
9	17950	Manifold, Function	1
10	92072	Filter Assembly	1
		Filter Assembly -- Location B -- if so equipped	2
11	--	--	--
12	REF	Pump, Function	1
13	REF	Pump, Drive	1
14	17316	Cylinder, Upper Lift	1
15	17315	Cylinder, Lower Lift	1

REF - Reference
Component Fittings not show or listed on this page.
For REF listings on this page, see later pages in this section.

Function Manifold Assembly

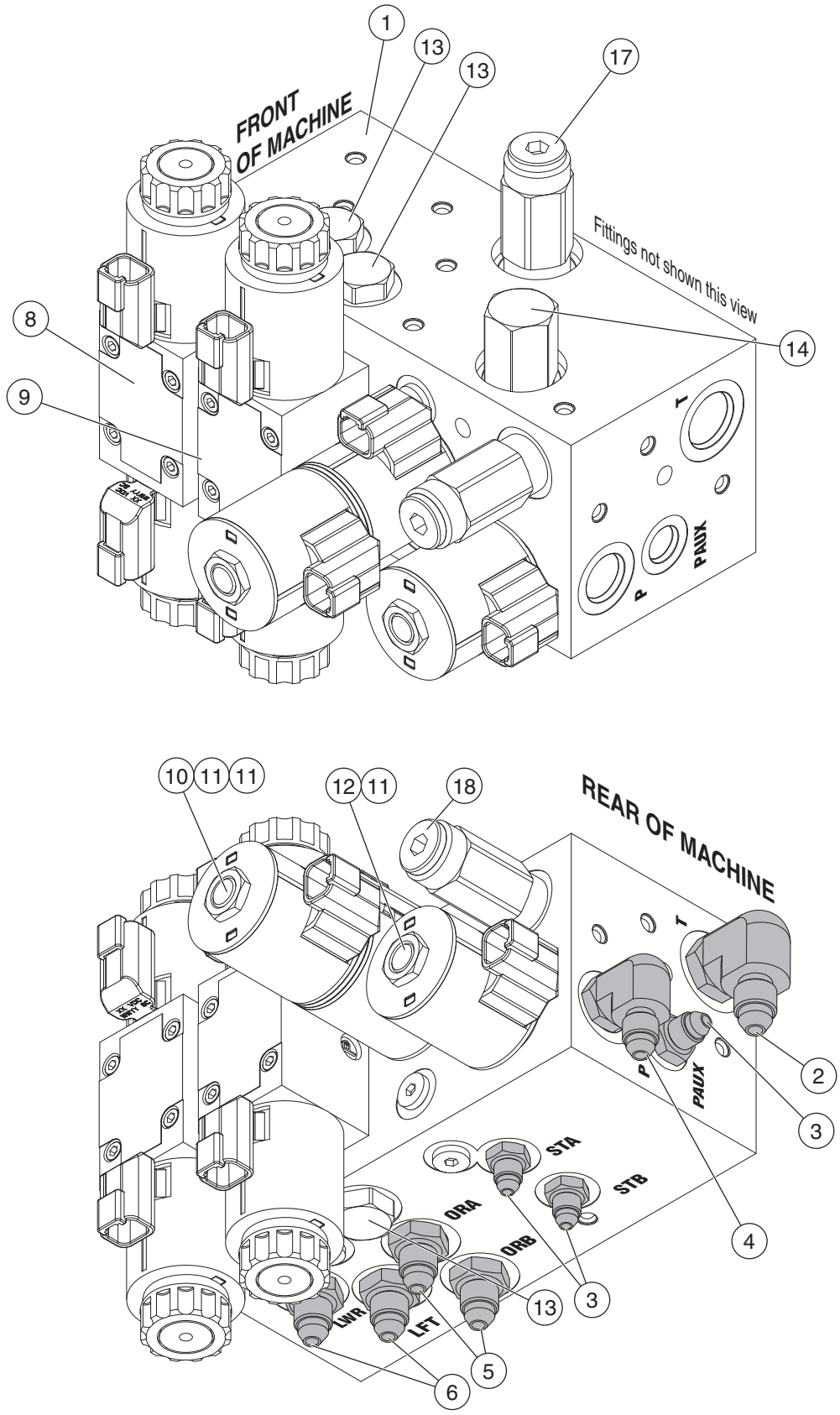

ILLUSTRATION No. ART_3487

92RT Series

FUNCTION MANIFOLD

Item	Part Number	Description	Qty.
1	17950	Manifold, Function, without fittings	--
2	50781	Fitting, MB-MJ90-10-8	1
3	50776	Fitting, MB-MJ-6-6	3
4	50792	Fitting, MB-MJ90-8-8	1
5	50778	Fitting, MB-MJ-8-6	2
6	50779	Fitting, MB-MJ-8-8	2
7			
8	91144	Valve, 4-way 3-position - Lift	1
9	92168	Valve, 4-way 3-position - Outrigger	1
10	92170	Valve, 5-way 3-position - Steer	1
11	91143	Coil, Valve, 12V	3
12	91148	Valve, Proportional	1
13	91477	Valve, Check	2
14	92171	Valve, Flow Regulator	1
15	93198	Valve, Check	1
16	51222	Fitting	1
17		Valve, Relief	1
18		Valve, Relief	1

Traction Manifold Assembly -- 5492RT

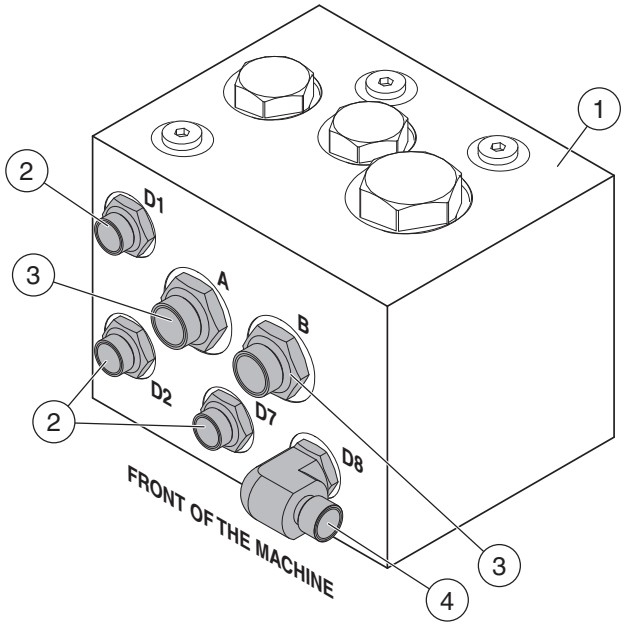

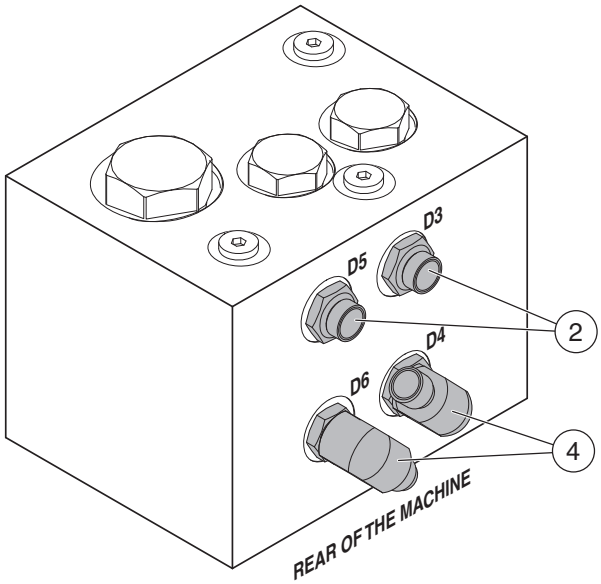

ILLUSTRATION No. ART_3488 92RT Series DRIVE MANIFOLD, 5492RT

Item	Part Number	Description	Qty.
1	18400	Manifold, Drive, without fittings	1
2	50837	Fitting, MFFOR-MB-8-10	5
3	50827	Fitting, MFFOR-MB-12-16	2
4	50848	Fitting, MFFOR-MB90-8-10	3

Traction Manifold Assembly -- 3392RT ~#13600044

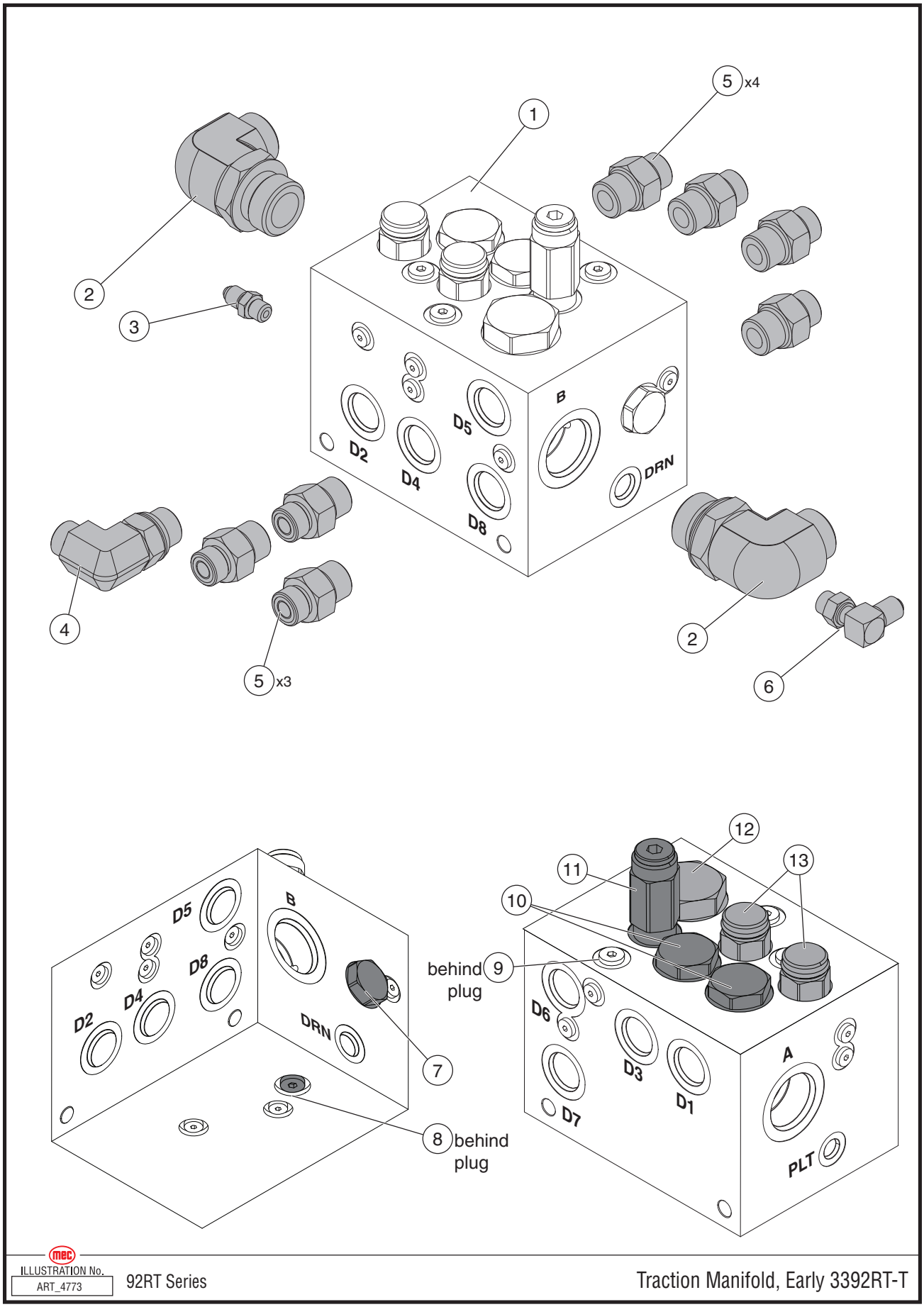

ILLUSTRATION No. ART_4773 92RT Series

Traction Manifold, Early 3392RT-T

Item	Part Number	Description	Qty.
--	88011	Traction Manifold Assembly	--
1	92167	Traction Manifold Block, without fittings	1
2	50845	Fitting, MFFOR-MB90-16-12	2
3	50769	Fitting, MB-MJ-4-	1
4	50848	Fitting, MFFOR-MB-8-10	1
5	50837	Fitting, MFFOR-MB-8-10	7
6	50790	Fitting, MB-MJ-6-6	1
7	92604	Valve, Oil Shuttle	1
8	91017	Orifice Plug, .040”	1
9	92607	Orifice Plug, .090”	1
10	92605	Flow Divider	2
11	92602	Valve, Relief	1
12	92606	Flow Divider	1
13	92603	Valve, Relief	2

Brake Manifold Assembly

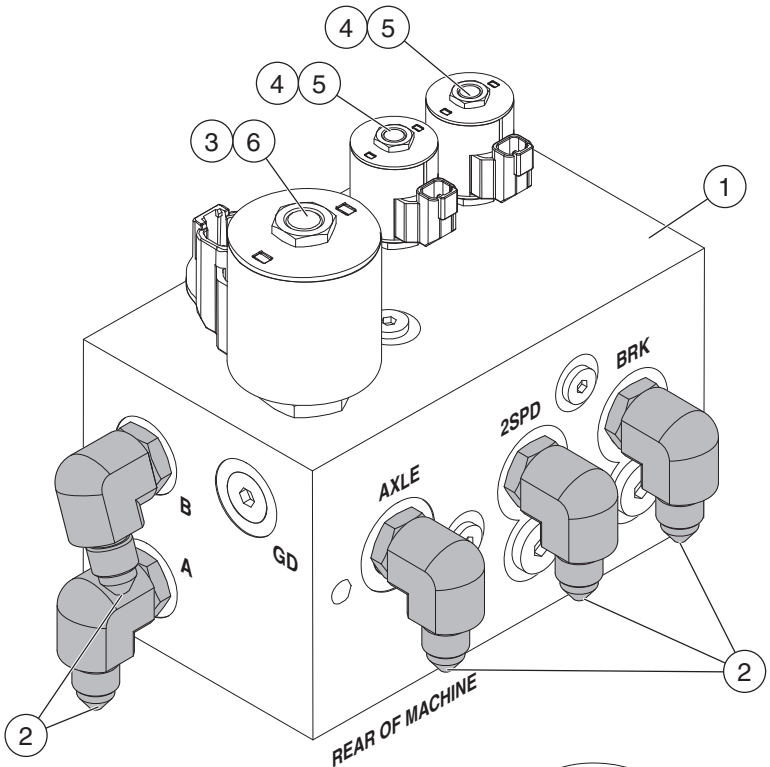

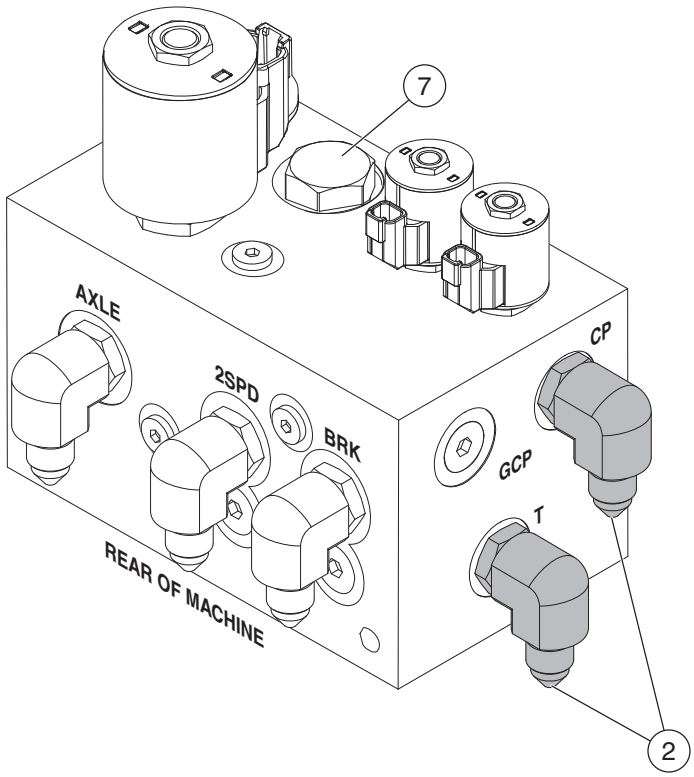

ILLUSTRATION No. ART_3489

92RT Series

BRAKE MANIFOLD

Item	Part Number	Description	Qty.
1	18401	Manifold, Brake, without fittings	--
2	50665	Fitting, MB-MJ90-4-4	7
3	92174	Valve, Solenoid	1
4	90119	Valve, Solenoid	2
5	92173	Coil, #8	2
6	91143	Coil, #10	1
7	92172	Valve, Load Sense Check	1

Wheel Motor Assembly, 3392RT ~#13600044

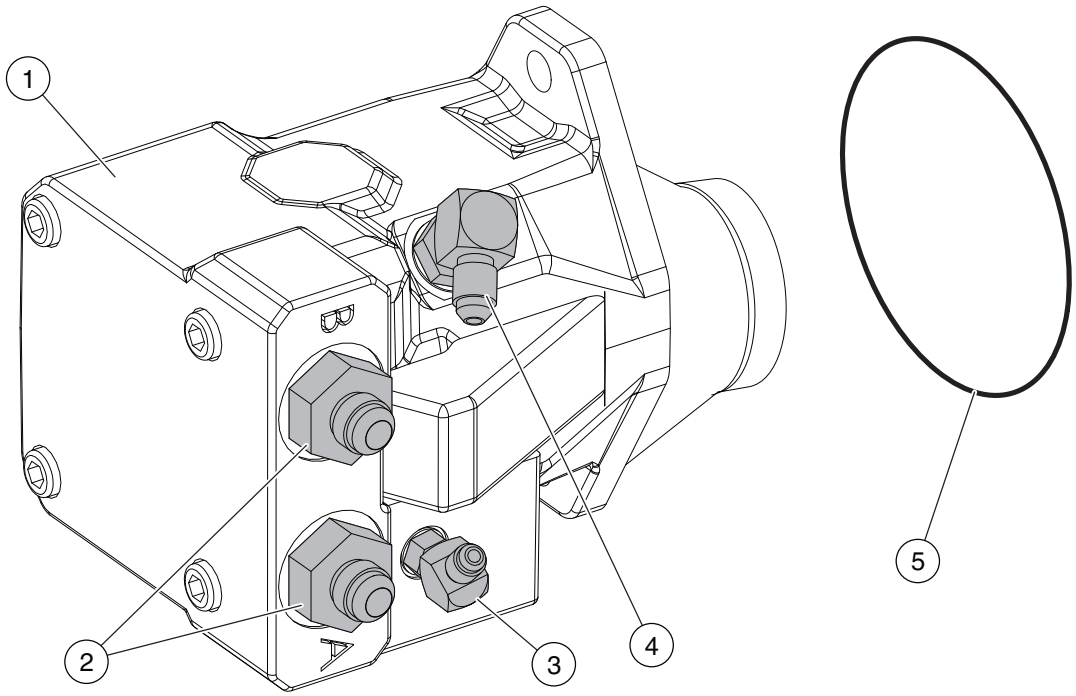

ILLUSTRATION No. ART_4758 92RT Series 3392 RT-T WHEEL MOTORS, ~#13600044

Item	Part Number	Description	Qty.
1	91402	**3392RT ~#13600044** Wheel Motor, without fittings	4
--	91560	Seal Kit	--
2	50659	Fitting, MB–MJ–12–8	2
3	50771	Fitting, MB–MJ45–4–4	1
4	50791	Fitting, MB–MJ90–8–6	1
5	91419	O-ring	1

Wheel Motor Assembly

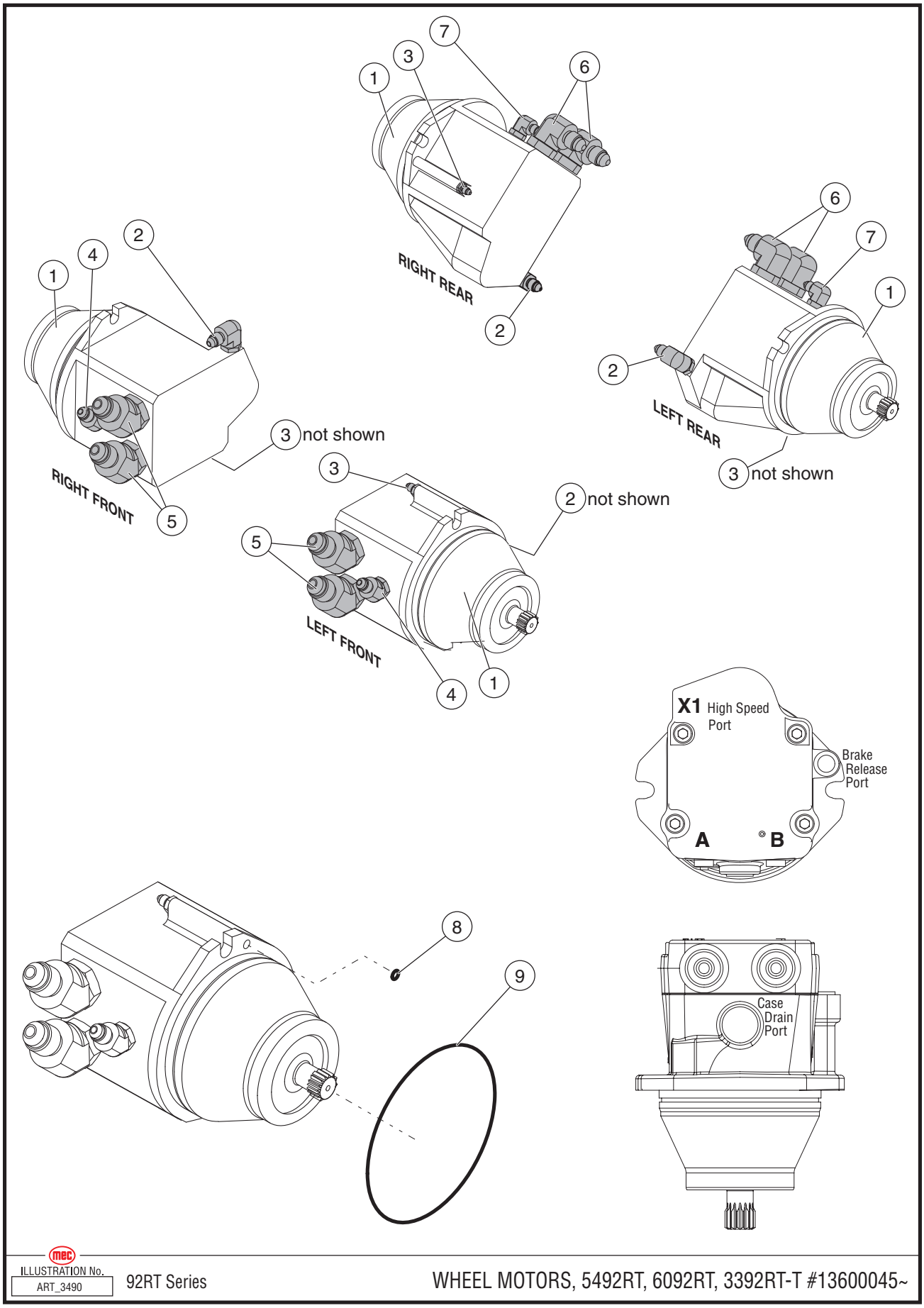

ILLUSTRATION No. ART_3490

92RT Series

WHEEL MOTORS, 5492RT, 6092RT, 3392RT-T #13600045~

Item	Part Number	Description	Qty.
1	91402	**3392RT #~13600044** Wheel Motor, without fittings	4
	92514	**3392RT #13600045~** Wheel Motor, without fittings	4
	17961	**5492RT ~#11900056, excluding 11900051, 11900055** Wheel Motor, without fittings	4
	91882	**5492RT #11900057~, including 11900051, 11900055** Wheel Motor, without fittings	4
	92514	**6092RT** Wheel Motor, without fittings	4
2	50660	Fitting, MB-MJ90-6-4	4
3	50769	Fitting, MB-MJ-4-4	4
4	51040	Fitting, MB-MJ45-8-6	2
5	50817	Fitting, MB-MFFOR45-150	4
6	50849	Fitting, MB-MFFOR90-150	4
7	50791	Fitting, MB-MJ90-8-6	2
8	92042	O-Ring	4
9	92166	O-Ring	4

Auxiliary Power Unit. 3392RT & 5492RT only

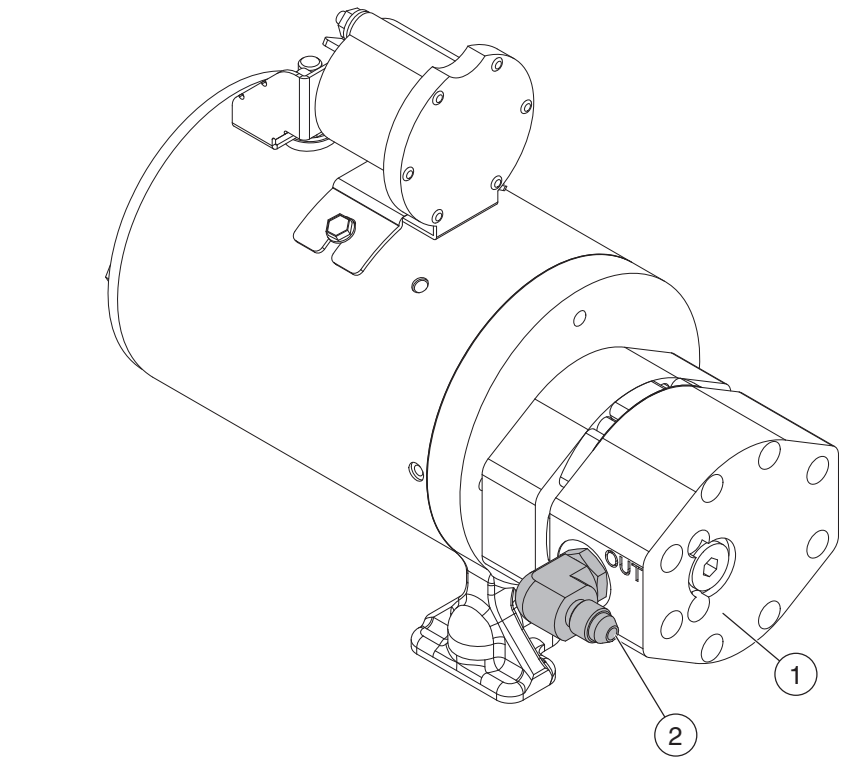

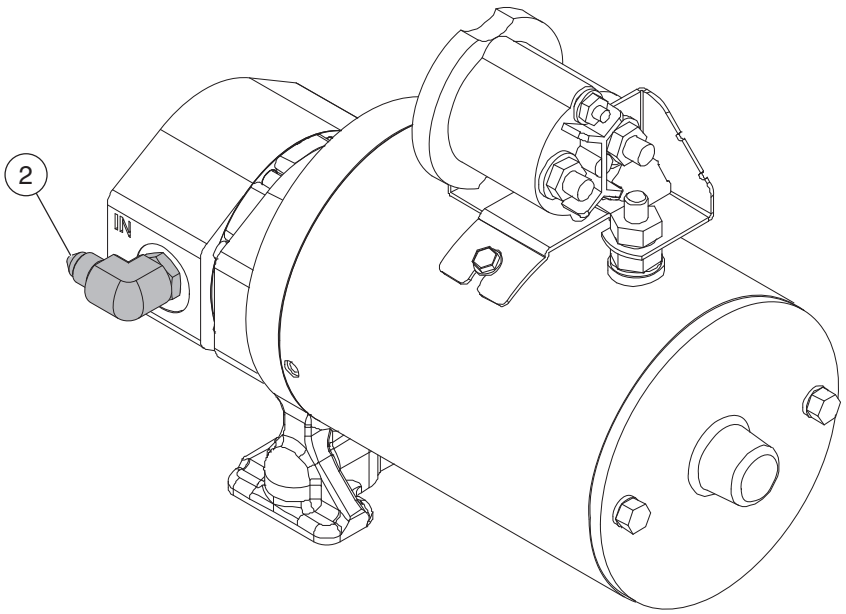

ILLUSTRATION No. ART_3491

92RT Series

AUXILLARY POWER UNIT, 5592RT, 3392RT-T

Item	Part Number	Description	Qty.
1	17973	Auxiliary Power Unit, without fittings	1
--	92534	Solenoid	--
2	50790	Fitting, MB-MJ90-6-6	2

Filter Assembly

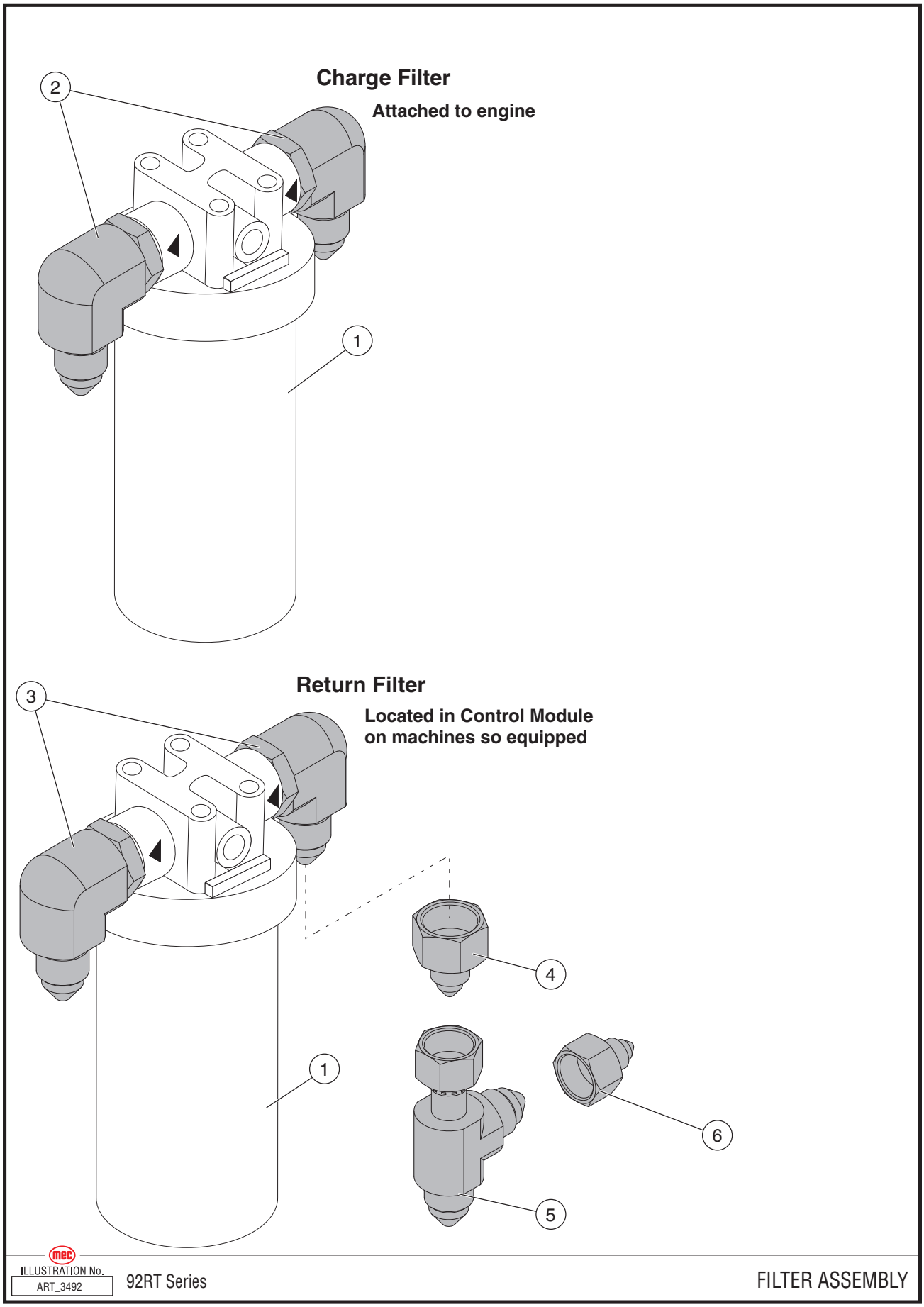

Item	Part Number	Description	Qty.
1	92072	Assembly, Filter, without fittings	2
--	92169	Filter Element	--
2	50923	Fitting, MP-MJ90-150	2
3	50916	Fitting, MP-MJ90-12-12	2
4	50883	Fitting, FJ-MJ-150	1
5	50891	Fitting, Tee, MJ-MJ-FJXT-12	1
6	50882	Fitting, FJ-MJ-8-4	1

Drive Pump

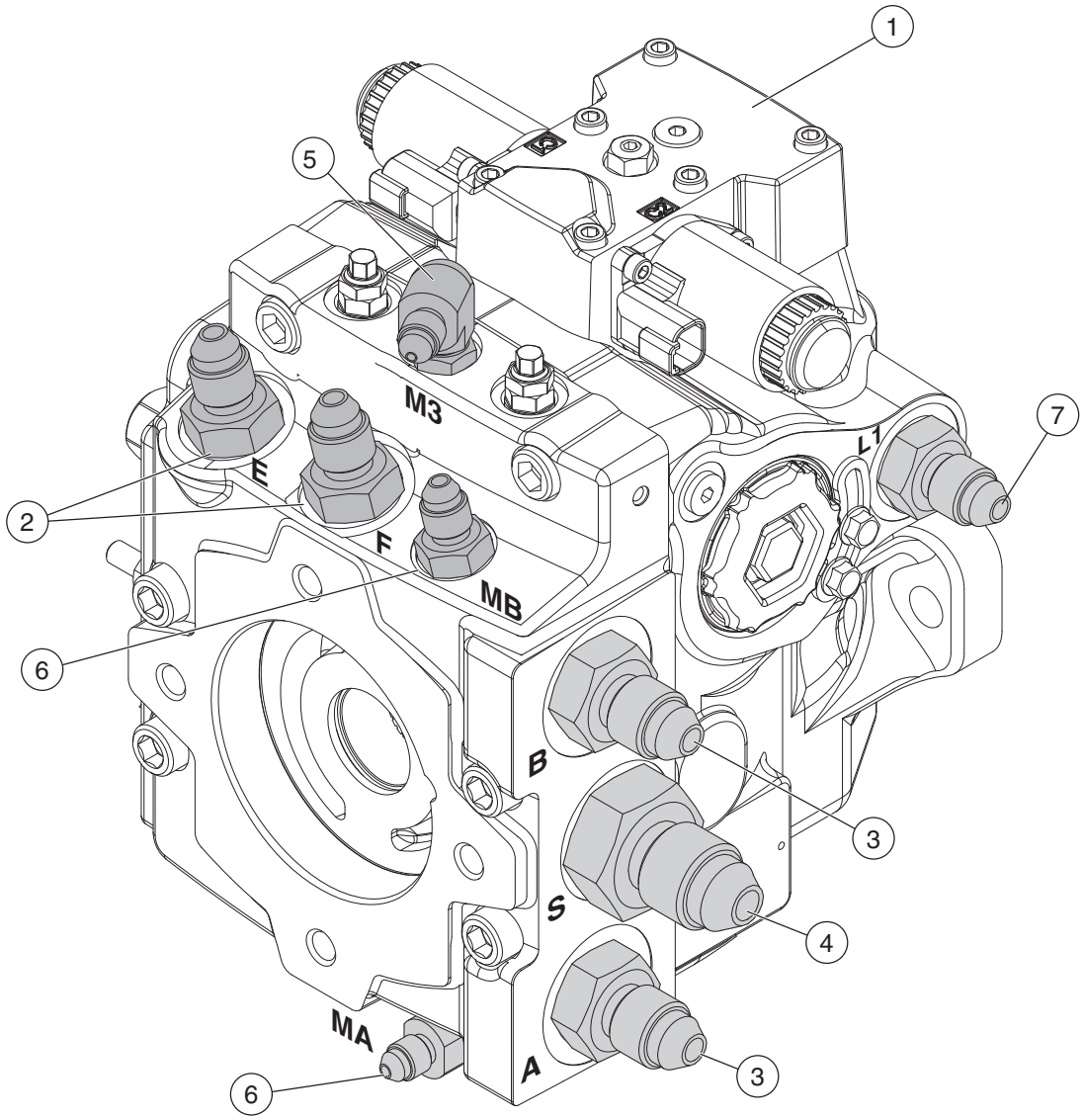

ILLUSTRATION No. ART_3493 92RT Series DRIVE PUMP

Item	Part Number	Description	Qty.
1	17965*	**5492RT ~#11900056, excluding 11900051, 11900055*** Drive Pump, 9-Spline Output, without fittings	
	91893	**5492RT #11900057~, including 11900051, 11900055 All 3392RT, 6092RT models** Drive Pump, 11-Spline Output, without fittings	
2	50762	Fitting, MB-MJ-10-8	2
3	50764	Fitting, MB-MJ-16-12	2
4	50765	Fitting, MB-MJ-16-16	1
5	50790	Fitting, MB-MJ90-06-04	1
6	50775	Fitting, MB-MJ-06-04	2
7	50659	Fitting, MB-MJ-12-08	1
8	93032*	Shaft, 11-spline adaptor, for part #17975 -- not shown	--

*5492RT -- If purchasing an 11-spline pump to replace a 9-spline pump, an 11-spline adaptor shaft must be purchased for gear pump #17975 (see Page 241)

Lift Pump Assembly

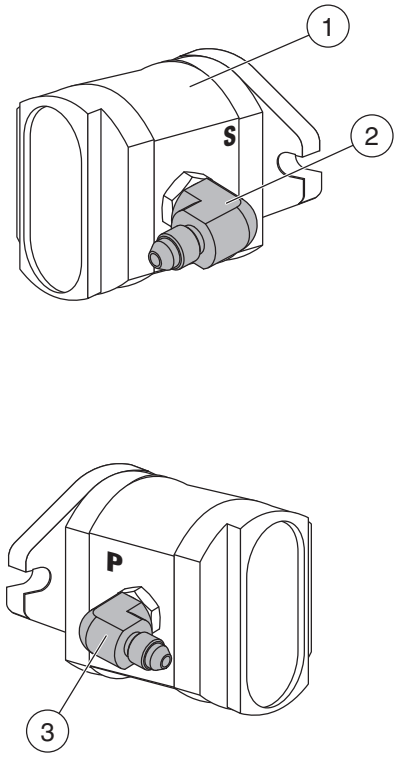

ILLUSTRATION No. ART_3494

92RT Series

LIFT PUMP

Item	Part Number	Description	Qty.
1	93033	**3392RT** Lift Pump, without fittings	1
	17975	**5492RT ~#11900056, excluding 11900051, 11900055*** Lift Pump, 9-Spline Shaft, without fittings	1
	93053	**5492RT #11900057~, including 11900051, 11900055** Lift Pump, 11-Spline Shaft, without fittings	1
	93033	**6092RT** Lift Pump, without fittings	1
2	50782	Fitting, MB-MJ90-12-12	1
3	50781	Fitting, MB-MJ90-10-8	1

Hydraulic Tank Assembly

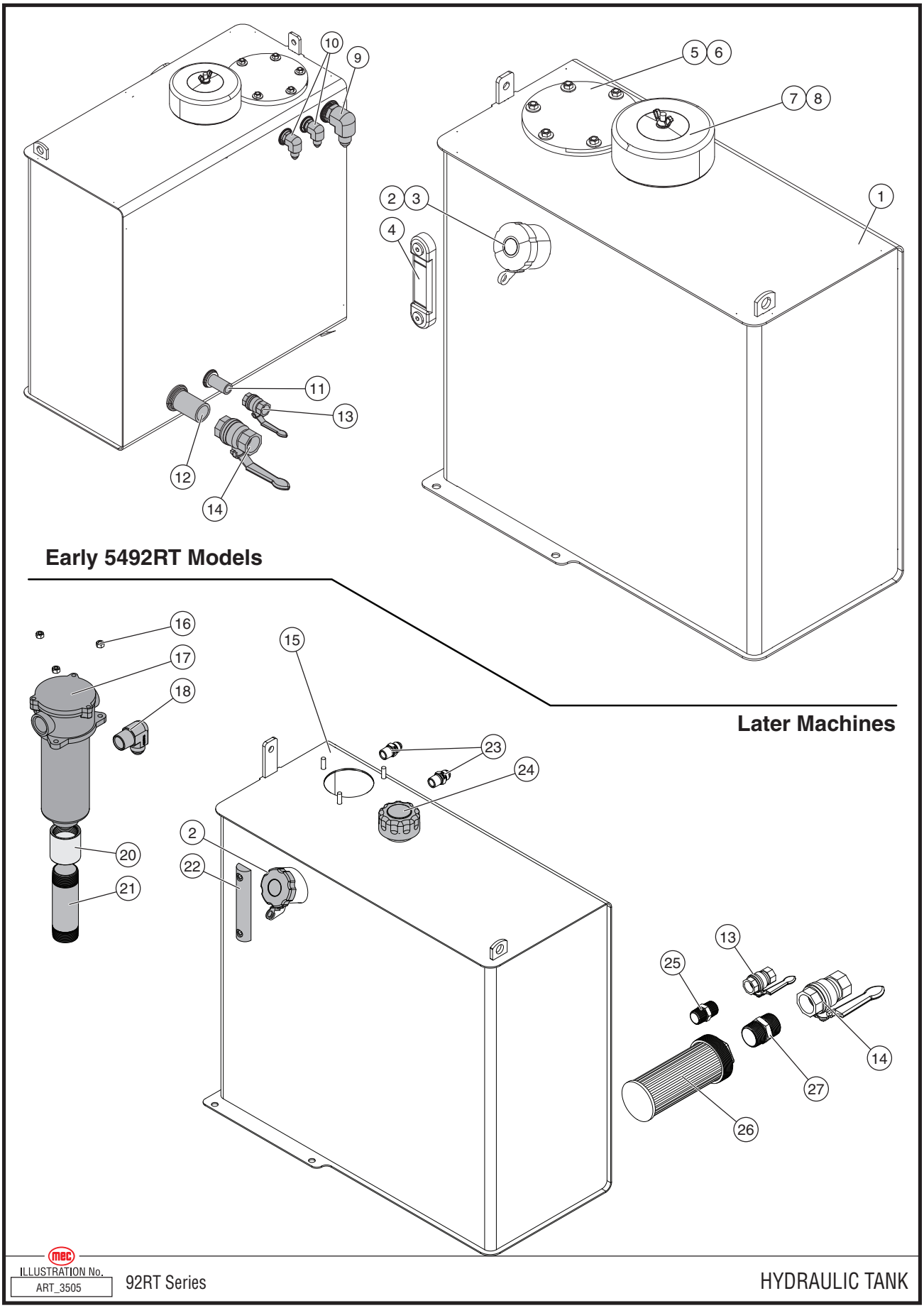

ILLUSTRATION No. ART_3505 92RT Series HYDRAULIC TANK

Item	Part Number	Description	Qty.
1	17955	Hydraulic Tank Assembly	1
2	92478	Filler Cap	--
3	92484	Filler Tube Strainer	--
4	92479	Sight Gauge	--
5	92482	Filter Element	--
6	92481	Breather Assembly	--
7	92485	Breather Element	--
8	92483	Gasket, Filter Cover	--
9	50916	Fitting, MJ-MP90-12-12	1
10	50924	Fitting, MJ-MP90-8-8	2
11	17409	Pipe Nipple, 3/4” x 2.00”	1
12	17408	Pipe Nipple, 1-1/4” x 2.5”	1
13	17410	Ball Valve, 3/4”	1
14	17407	Valve, 1-1/4”	1
15	17839	Hydraulic Tank Weldment	1
16	50048	Nut, M8 Nylock	3
17	92366	Filter Assembly	1
--	92397	Filter Element	--
18	51021	Fitting, MJ-MP90-12-16	1
19	--	--	1
20	93165	Fitting, 1-1/2 NPT Coupler, Aluminum	1
21	93625	Fitting, 1-1/2 NPT Stainless Nipple	1
22	9370	Sight Gauge	1
23	51022	Fitting, MJ-MP-8-8	2
24	92357	Breather Cap	1
25	93823	Fitting, 3/4 NPT Nipple	1
26	92356	Suction Strainer	1
27	93824	Fitting, 1-1/14 NPT Nipple	1

Outrigger Cylinder

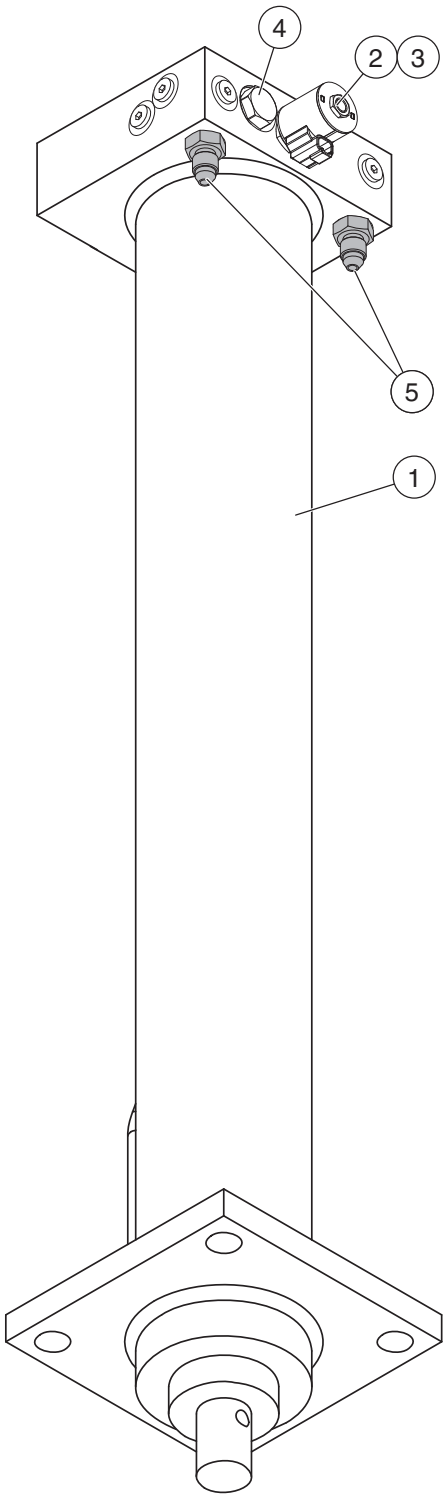

ILLUSTRATION No. ART_3495

92RT Series

OUTRIGGER CYLINDER

Item	Part Number	Description	Qty. Per Assembly	Qty. Per Machine
1	17317	**Machines manufactured before Sept 2015** Assembly, Outrigger Cylinder, without fittings	1	4
	92518	Seal Kit for #17317	--	--
	93713	**Machines manufactured after Sept 2015** Assembly, Outrigger Cylinder, without fittings	1	4
2	92519	Valve	1	4
3	91143	Coil	1	4
4	92520	Check Valve	1	4
5	50774	Fitting, MB-MJ-4-6	2	8

Axle Lock Cylinder

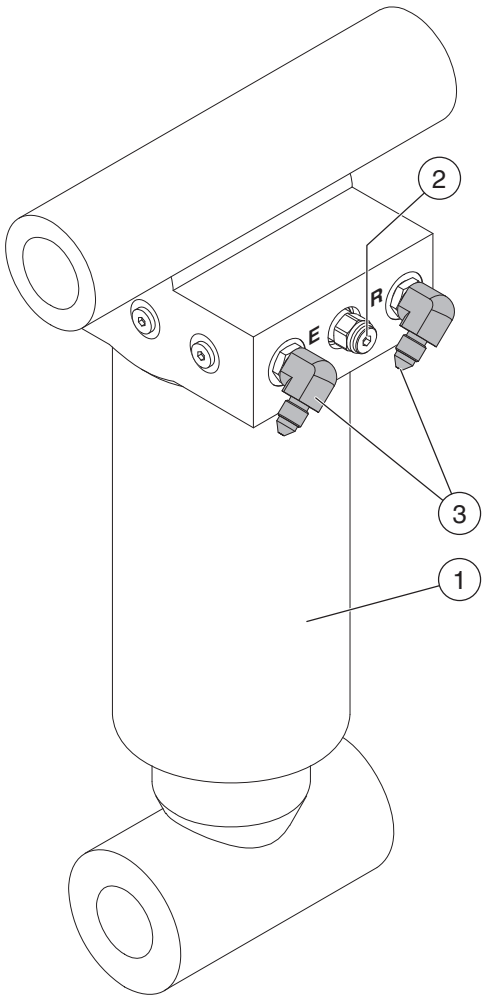

ILLUSTRATION No. ART_3496

92RT Series

AXLE LOCK CYLINDER

Item	Part Number	Description	Qty. Per Assembly	Qty. Per Machine
1	17469	Assembly, Axle Lock Cylinder, without fittings	1	2
--	92521	Seal Kit	--	--
2	92522	Counterbalance Valve	1	4
3	50665	Fitting, MB-MJ90-4-4	2	4

Steer Cylinder

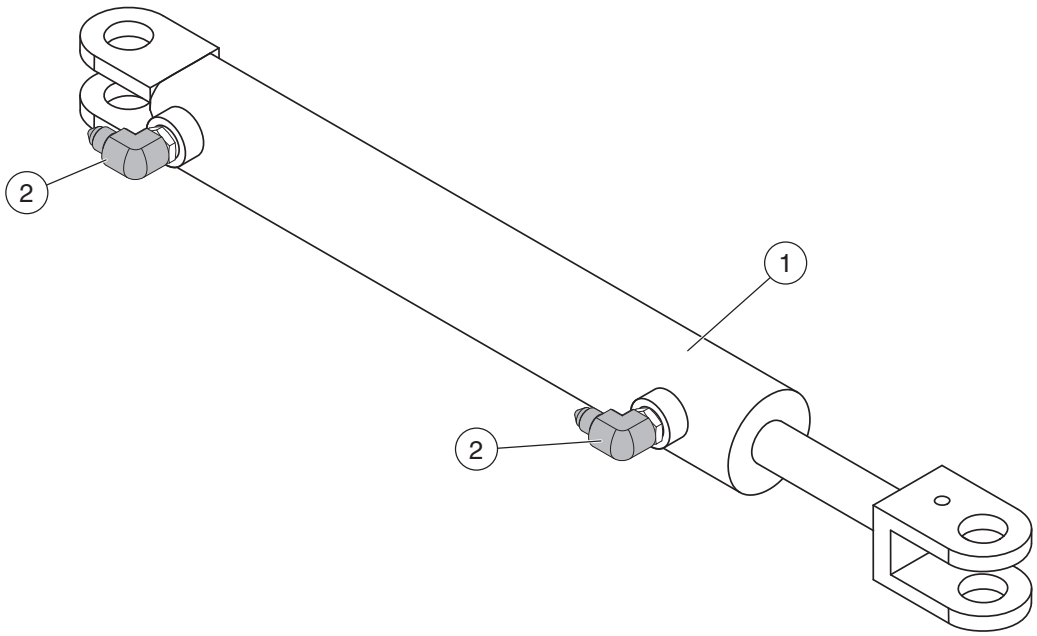

ILLUSTRATION No. ART_3497

92RT Series

STEERING CYLINDER

Item	Part Number	Description	Qty. Per Assembly	Qty. Per Machine
1	17318	Assembly, Steer Cylinder, without fittings	1	2
--	92523	Seal Kit	--	--
2	50790	Fitting, MB-MJ90-6-6	2	4

Lift Cylinders, 3392RT, 5492RT

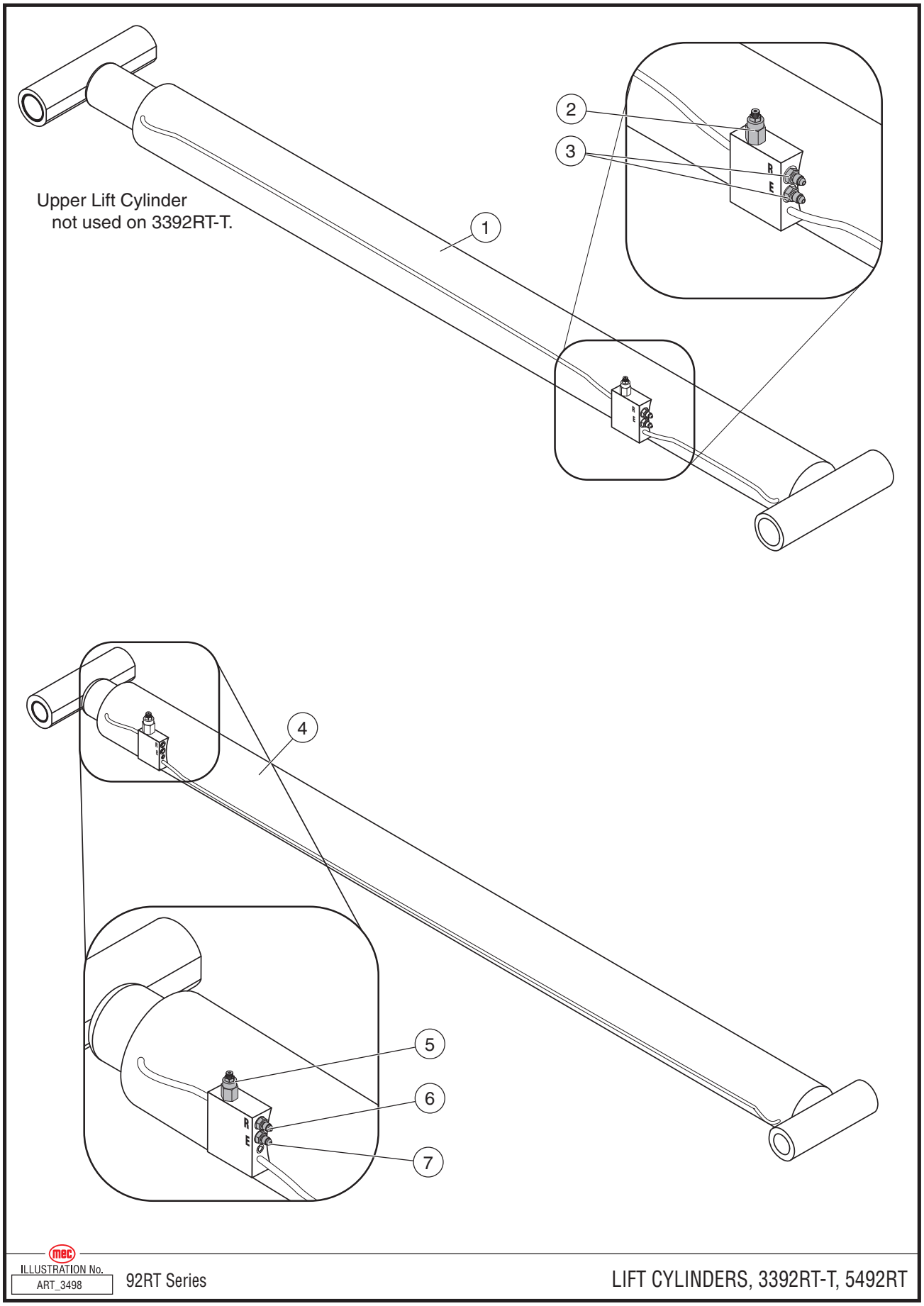

ILLUSTRATION No. ART_3498

92RT Series

LIFT CYLINDERS, 3392RT-T, 5492RT

Item	Part Number	Description	Qty.
1	17316	Assembly, Upper Lift Cylinder, without fittings	--
--	92524	Seal Kit	--
2	92525	Counterbalance Valve	1
3	50776	Fitting, MB-MJ-6-6	2
4	17315	Assembly, Lower Lift Cylinder, without fittings	--
--	92526	Seal Kit	--
5	92525	Counterbalance Valve	1
6	50776	Fitting, MB-MJ-6-6	1
7	50779	Fitting, MB-MJ-8-8	1

Lift Cylinders, 6092RT

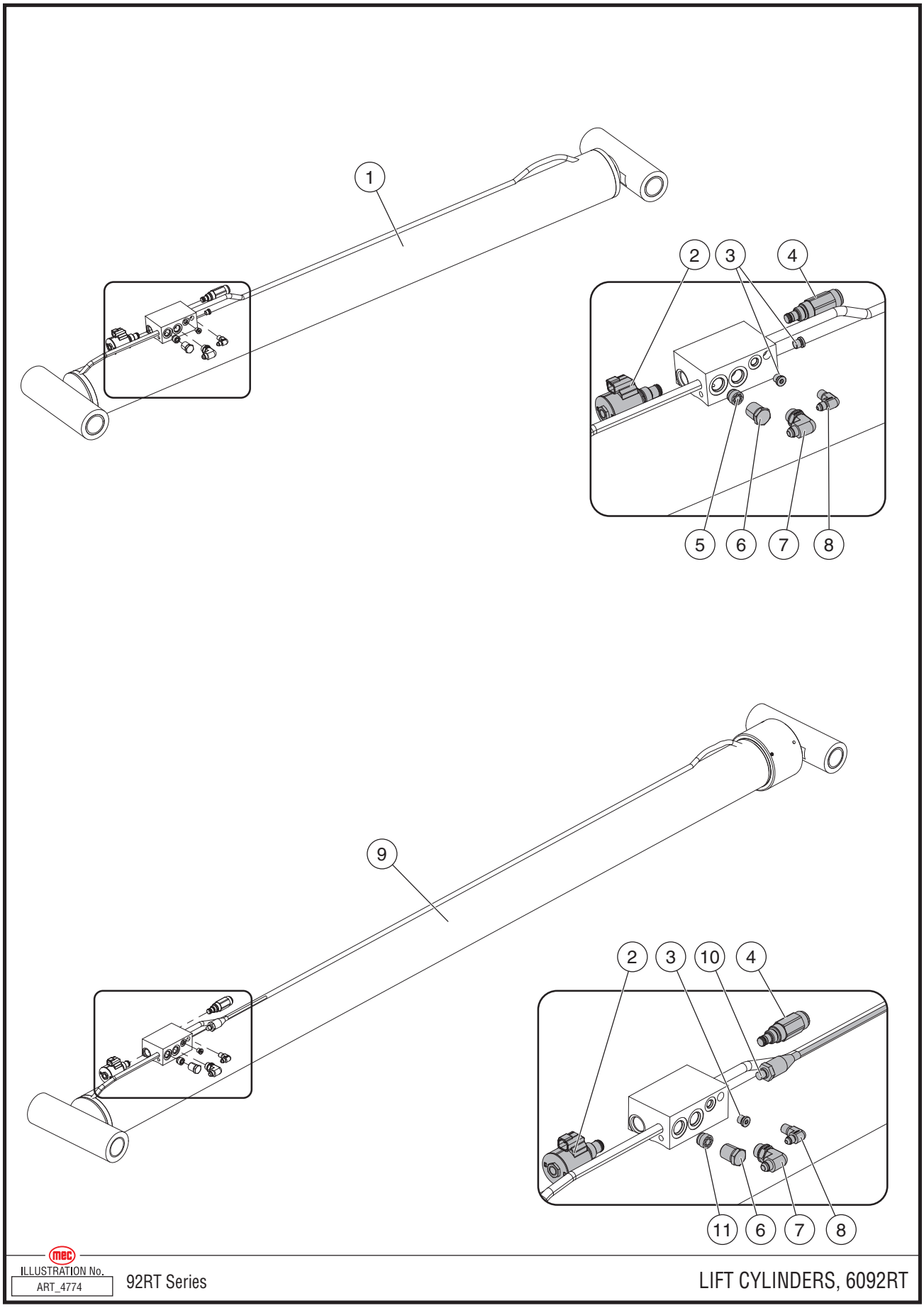

Item	Part Number	Description	Qty.
1	17857	**Machines manufactured ~Sept 2015** Upper Lift Cylinder	1
	93712	**Machines manufactured Sept 2015~** Upper Lift Cylinder	1
2	93654	Valve	2
3	50961	Fitting, MB-4 Plug	3
4	93653	Relief Valve	2
5	93655	Check Orifice	1
6	51098	Fitting, MB-8 Plug	2
7	50991	Fitting, 06G-08MBX90	2
8	50664	Fitting, MJ-MP90-4-4	2
9	17856	**Machines manufactured ~Sept 2015** Lower Lift Cylinder	1
	93711	**Machines manufactured Sept 2015~** Lower Lift Cylinder	1
10	90845	Pressure Transducer -- only on machines equipped with optional Overload Sensing System	1
11	93656	Check Orifice	1

Lift Circuit, 3392RT, 5492RT

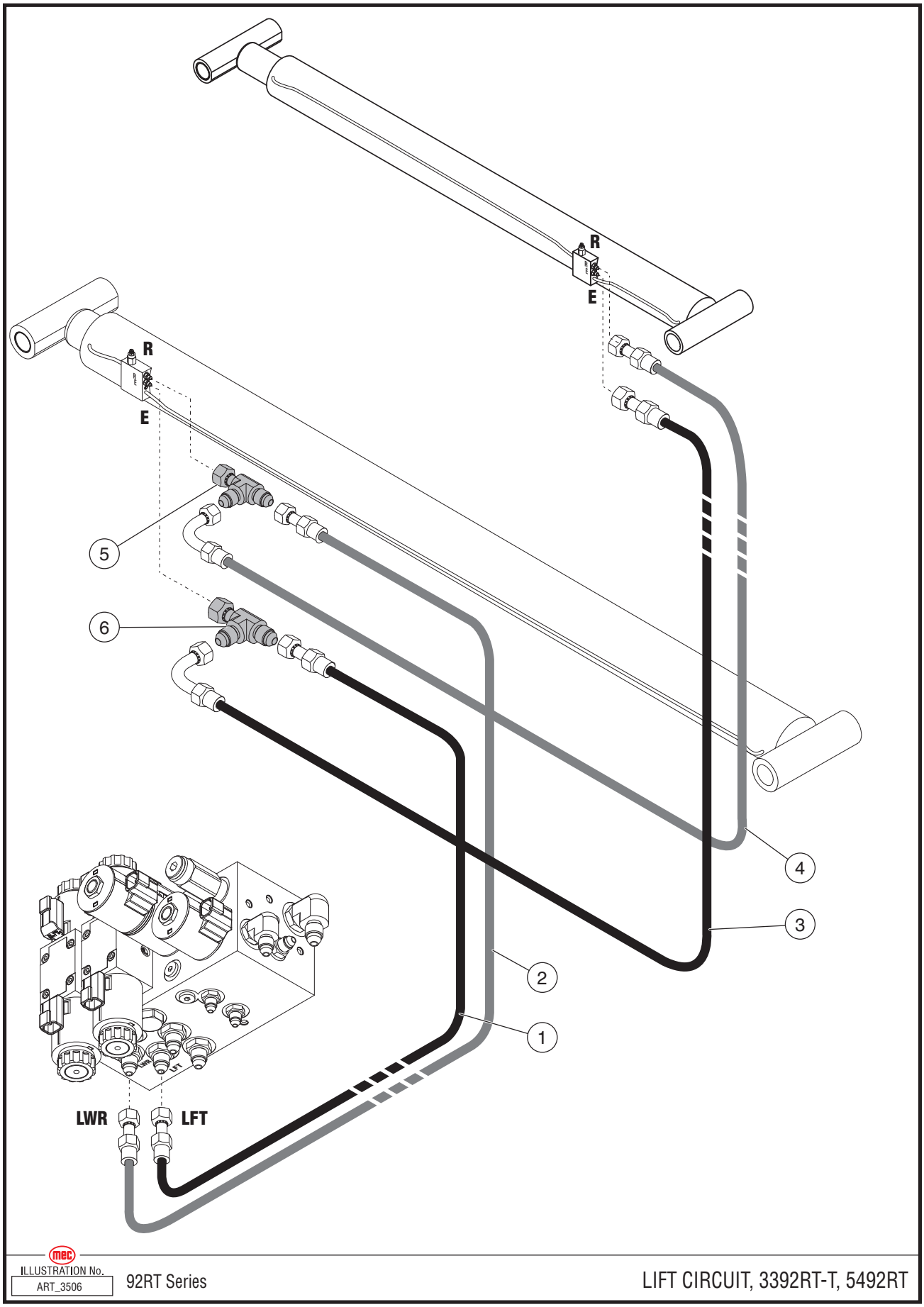

ILLUSTRATION No. ART_3506 92RT Series LIFT CIRCUIT, 3392RT-T, 5492RT

Item	Part Number	Description	Qty.
1	52113	Hose Assy, 1/2” x 21’, 8G8FJX-8G8FJX	1
2	52114	Hose Assy, 1/2” x 21’, 8G6FJX-8G8FJX	1
Item #s 3-6 used only on 5492RT machines; not used on 3392RT machines			
3	52115	Hose Assy, 3/8” x 29’, 6G6FJX-8G6FJX90L	1
4	52116	Hose Assy, 3/8” x 29’, 6G6FJX-6G6FJX90	1
5	50893	Fitting, MJ-FJX-MJT-6	1
6	50894	Fitting, MJ-FJX-MJT-8	1

Lift Circuit, 6092RT

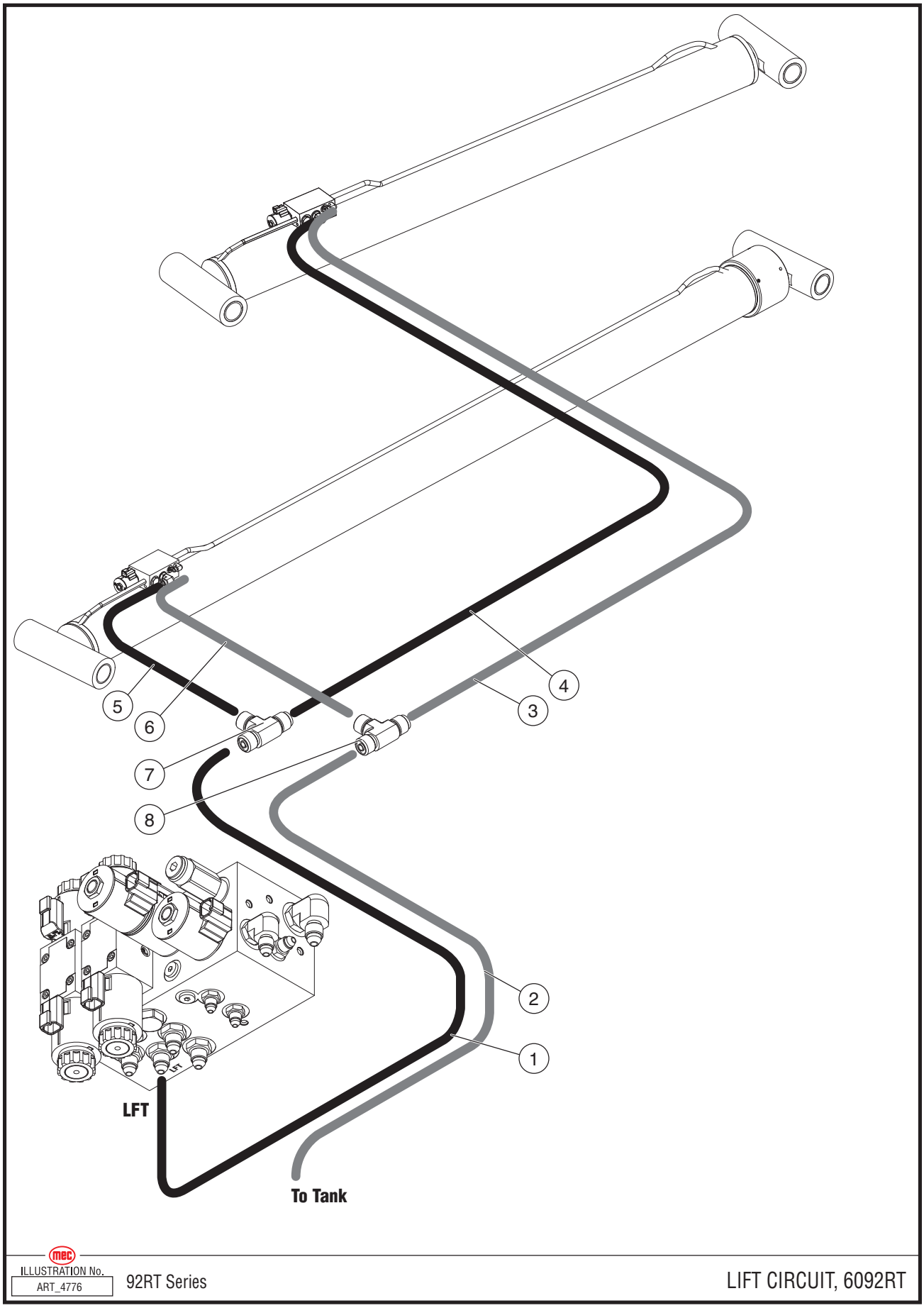

ILLUSTRATION No. ART_4776

92RT Series

LIFT CIRCUIT, 6092RT

Item	Part Number	Description	Qty.
1	52656	Hose Assy, 1/2” x 187”, 8G8FJX-8G8FJX	1
2	52657	Hose Assy, 3/8” x 195”, 6G6FJX-6G6FJX60	1
3	52658	Hose Assy, 3/8” x 32.5”, 6G6FJX-6G6FJX90	1
4	52659	Hose Assy, 3/8” x 32.5”, 6G6FJX-6G8FJX90	1
5	52660	Hose Assy, 1/2” x 48”, 8G8FJX-8G8FJX	1
6	52661	Hose Assy, 3/8” x 48”, 6G6FJX-6G6FJX	1
7	50894	Fitting, MJ-FJX-MJ-8	1
	50900	Fitting, MJ-MJ-8-8 (not shown)	1
8	50928	Fitting, MJT-6	1

Drive Circuit -- 5492RT

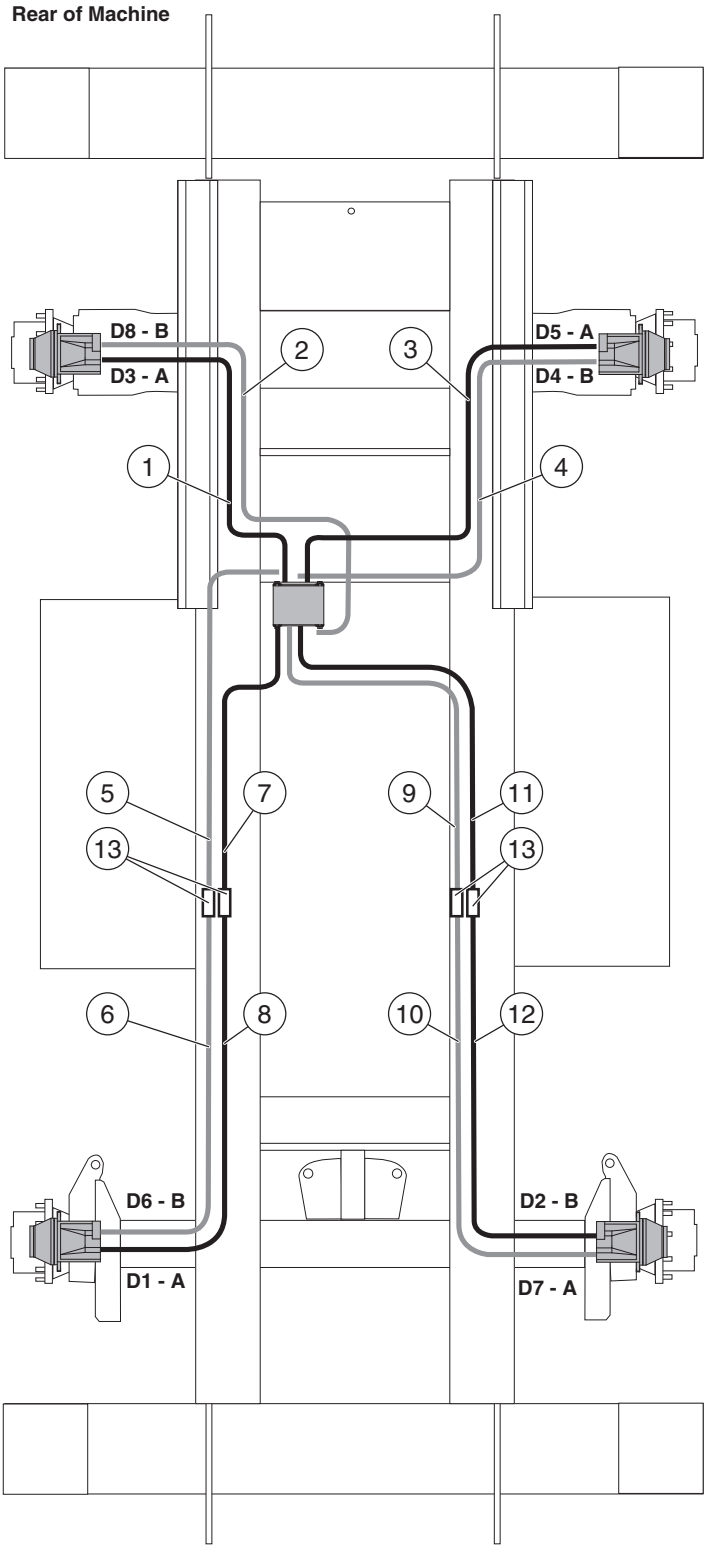

Traction Manifold

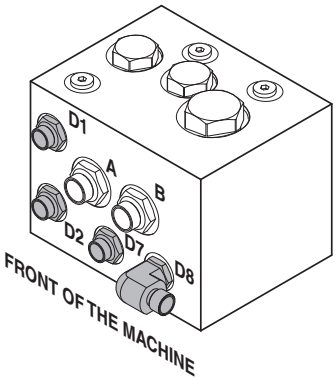

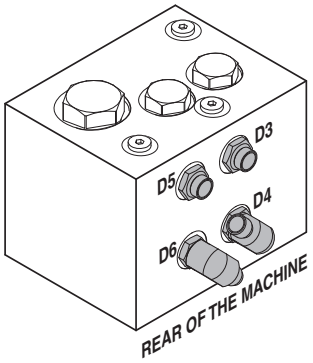

Wheel Motor

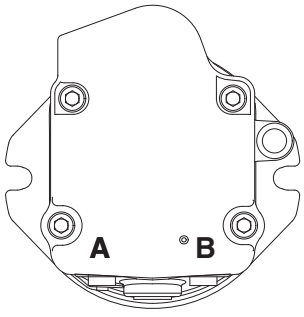

ILLUSTRATION No. ART_3507

92RT Series

DRIVE CIRCUIT, 5492RT

Item	Part Number	Description	Qty.
1	52060	Hose Assy, 1/2” x 56”, 8G8FFORX90 - 8G8FFORX45	1
2	52061	Hose Assy, 1/2” x 64”, 8G8FFORX90 - 8G8FFORX90	1
3	52062	Hose Assy, 1/2” x 68”, 8G8FFORX90 - 8G8FFORX45	1
4	52063	Hose Assy, 1/2” x 64”, 8G8FFORX - 8G8FFORX90	1
5	52064	Hose Assy, 1/2” x 58”, 8G8FFORX - 8G8FFORX45	1
6	52065	Hose Assy, 1/2” x 72”, 8G8FFORX - 8G8FFORX	1
7	52066	Hose Assy, 1/2” x 48”, 8G8FFORX - 8G8FFORX90	1
8	52067	Hose Assy, 1/2” x 69”, 8G8FFORX - 8G8FFORX	1
9	52068	Hose Assy, 1/2” x 66”, 8G8FFORX - 8G8FFORX45	1
10	52069	Hose Assy, 1/2” x 63”, 8G8FFORX - 8G8FFORX	1
11	52070	Hose Assy, 1/2” x 63”, 8G8FFORX - 8G8FFORX45	1
12	52071	Hose Assy, 1/2” x 71”, 8G8FFORX - 8G8FFORX	1
13	50867	Fitting, MFFOR-MFFOR-8	4

Drive Circuit-- 3392RT ~#13600044

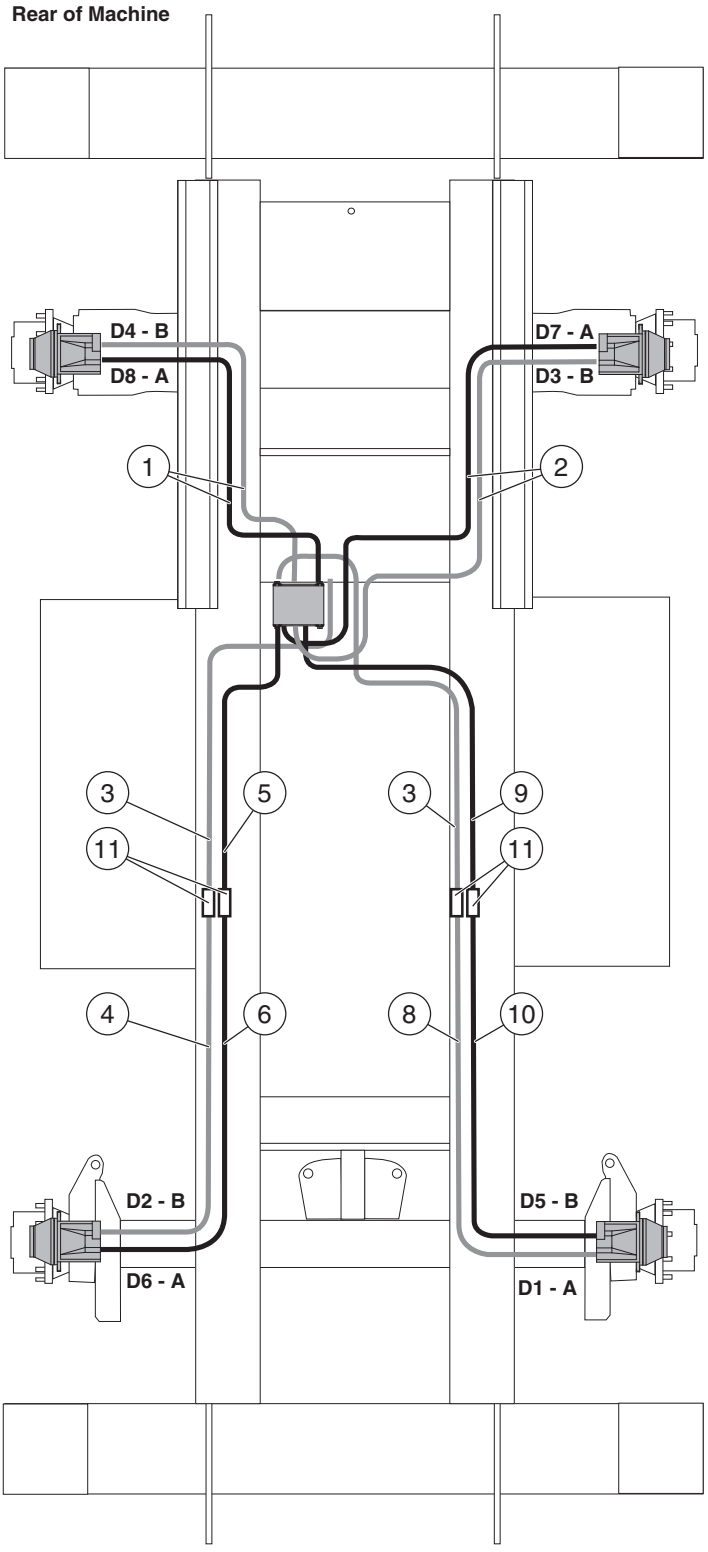

Traction Manifold

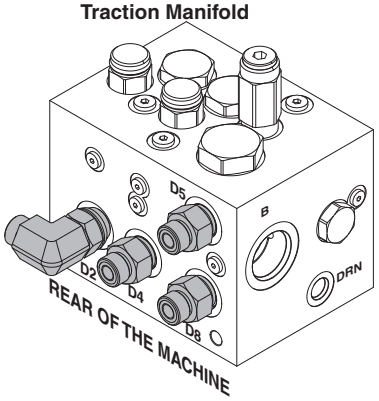

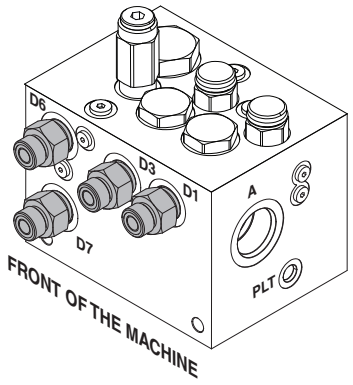

Wheel Motor

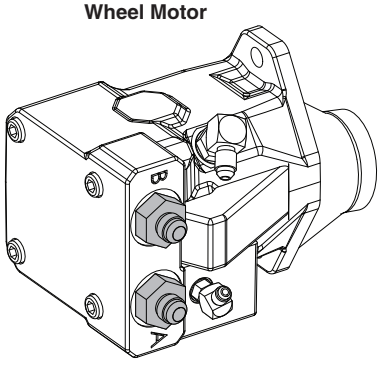

ILLUSTRATION No. ART_4775

92RT Series

DRIVE CIRCUIT, 3392RT-T ~#13600044

Item	Part Number	Description	Qty.
1	52529	Hose Assy, 1/2” x 53”, 8G8FFORX - 8G8FFORX45	2
2	52530	Hose Assy, 1/2” x71 “, 8G8FFORX - 8G8FFORX90	2
3	52681	Hose Assy, 1/2” x 58.5”, 8G8FFORX - 8G8FFORX90	2
4	52064	Hose Assy, 1/2” x 58”, 8G8FFORX - 8G8FFORX45	1
5	52680	Hose Assy, 1/2” x 45.25”, 8G8FFORX - 8G8FFORX45	1
6	52066	Hose Assy, 1/2” x 48”, 8G8FFORX - 8G8FFORX90	1
7	--	--	--
8	52070	Hose Assy, 1/2” x 66.25”, 8G8FFORX - 8G8FFORX45	1
9	52682	Hose Assy, 1/2” x 66.25”, 8G8FFORX - 8G8FFORX90	1
10	52068	Hose Assy, 1/2” x 66”, 8G8FFORX - 8G8FFORX45	1
11	50867	Fitting, MFFOR-MFFOR-8	4

Drive Circuit-- 3392RT #13600045~, 6092RT

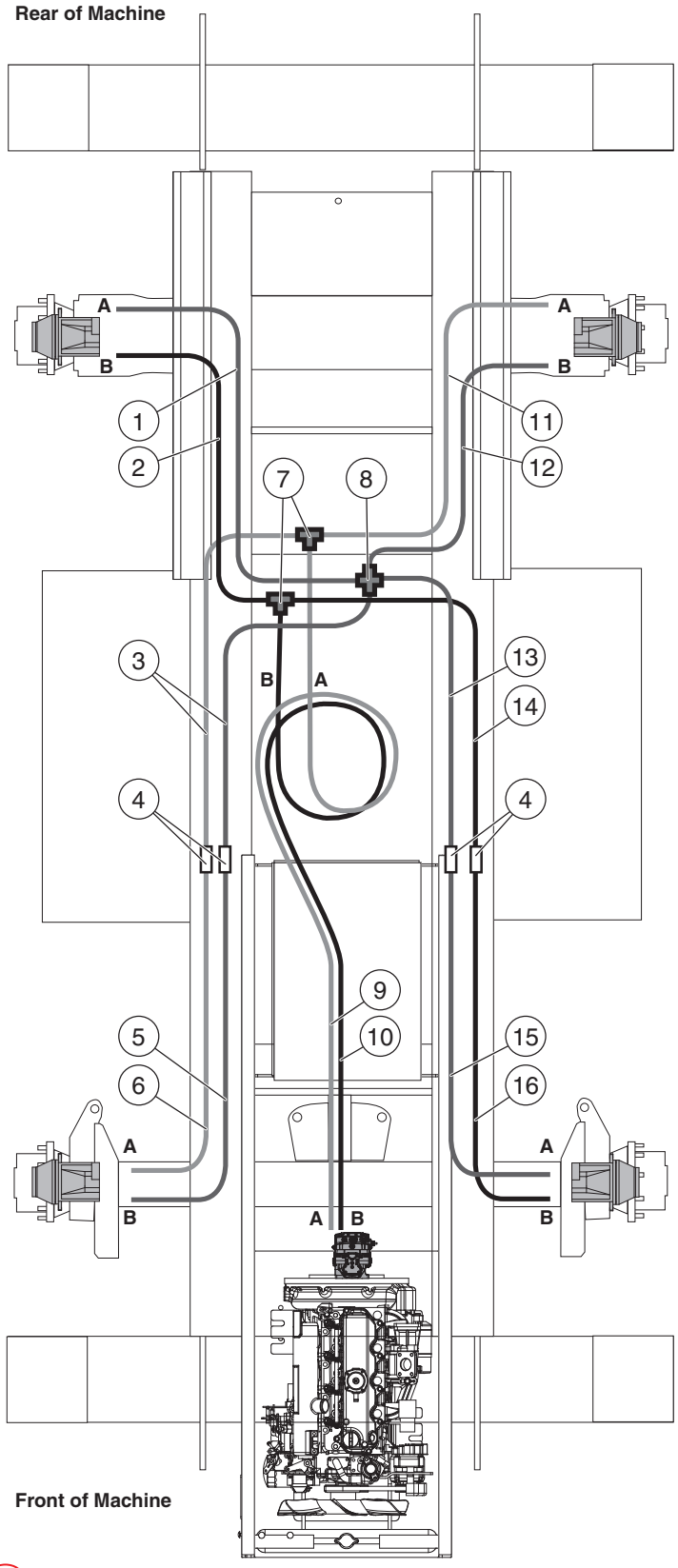

Drive Pump

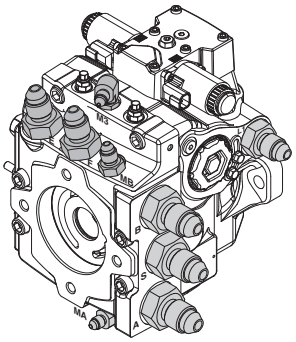

Wheel Motor

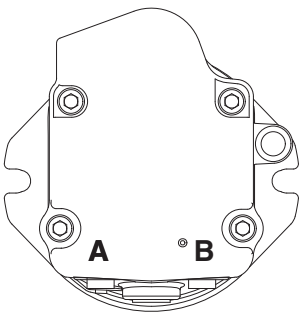

ILLUSTRATION No. ART_4777

92RT Series

DRIVE CIRCUIT, 3392RT-T #13600045~, 6092RT

Item	Part Number	Description	Qty.
1	52610	Hose Assy, 1/2” x 53”, 8G8FFORX - 8G12FFORX	1
2	52609	Hose Assy, 1/2” x 50.5”, 8G8FFORX - 8G12FFORX	1
3	52614	Hose Assy, 1/2” x 42”, 8G8FFORX - 8G12FFORX90S	2
4	50867	Fitting, MFFOR-MFFOR-8	4
5	52605	Hose Assy, 1/2” x 62.5”, 8G8FFORX - 8G8FFORX	1
6	52606	Hose Assy, 1/2” x 66”, 8G8FFORX - 8G8FFORX	1
7	51140	Fitting, MFFOR-12-12-12	2
8	51141	Fitting, MFFOR-12-12-12-12	1
9	52073	Hose Assy, 3/4” x 139”, 12G12FFORX-12G12FFORX90	1
10	52072	Hose Assy, 3/4” x 133”, 12G12FFORX-12G12FFORX90	1
11	52612	Hose Assy, 1/2” x 71”, 8G8FFORX - 8G12FFORX	1
12	52613	Hose Assy, 1/2” x 73”, 8G8FFORX - 8G12FFORX	1
13	52611	Hose Assy, 1/2” x 61.75”, 8G8FFORX - 8G12FFORX90S	1
14	52615	Hose Assy, 1/2” x 61.25”, 8G8FFORX - 8G12FFORX	1
15	52607	Hose Assy, 1/2” x 66.75”, 8G8FFORX - 8G8FFORX	1
16	52608	Hose Assy, 1/2” x 62.75”, 8G8FFORX - 8G8FFORX	1

Brake Circuit

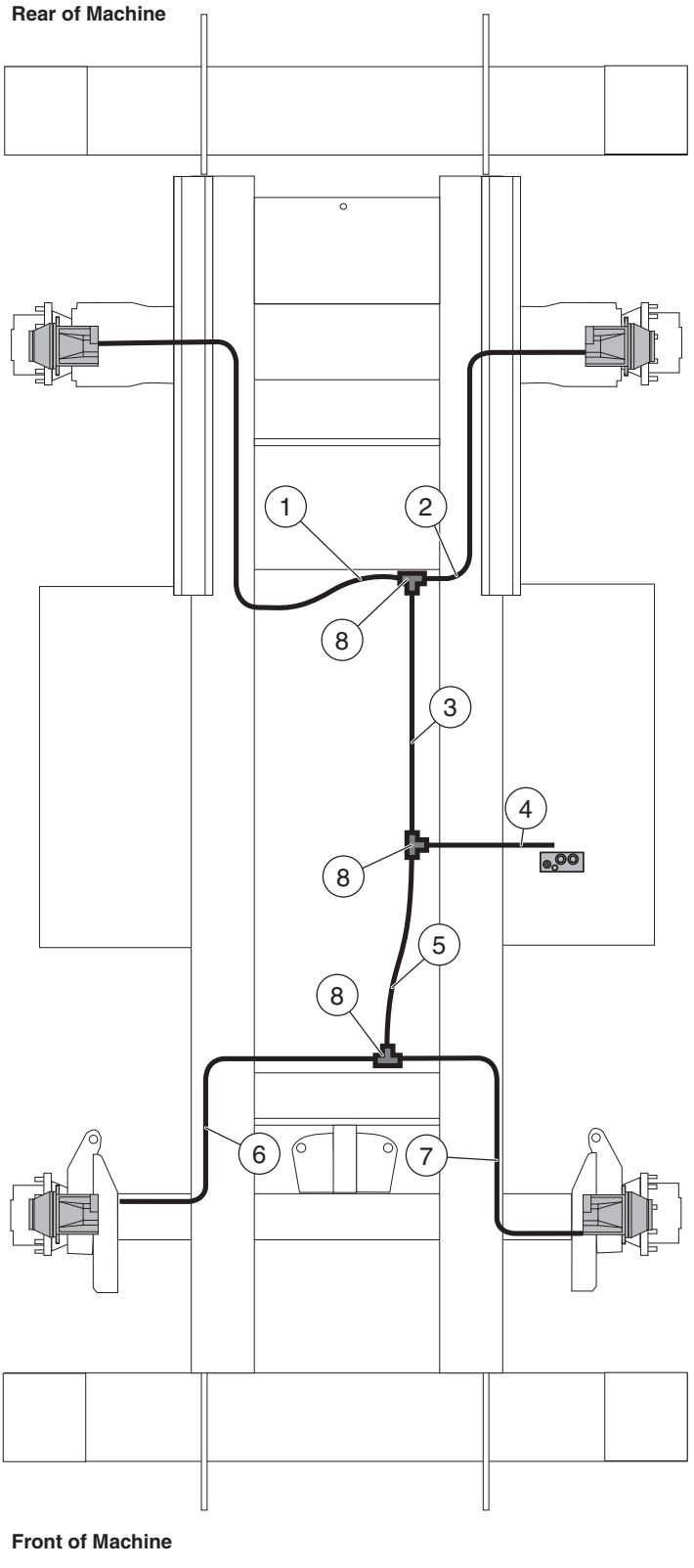

Brake/2-Speed Manifold

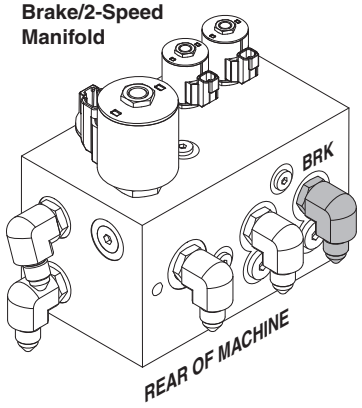

Wheel Motor, 5492RT, 6092RT, 3392RT-T #13600045~

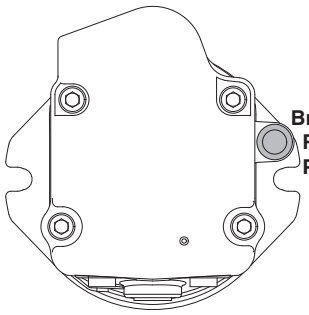

Wheel Motor, 3392RT-T ~#13600044

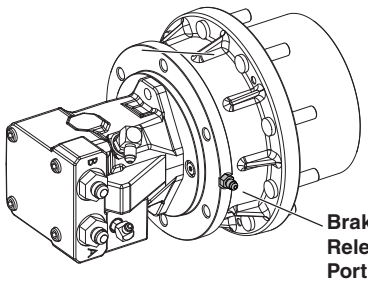

ILLUSTRATION No. ART_3508

92RT Series

BRAKE CIRCUIT

Item	Part Number	Description	Qty.
1	52078	Hose Assy, 1/4” x 90”, 4G4FJX-4G4FJX	1
2	52079	Hose Assy, 1/4” x 66”, 4G4FJX-4G4FJX90	1
3	52080	Hose Assy, 1/4” x 19”, 4G4FJX-4G4FJX	1
4	52081	Hose Assy, 1/4” x 38”, 4G4FJX-4G4FJX	1
5	52082	Hose Assy, 1/4” x 14”, 4G4FJX-4G4FJX	1
6	52083	Hose Assy, 1/4” x 124”, 4G4FJX-4G4FJX90	1
7	52084	Hose Assy, 1/4” x 79”, 4G4FJX-4G4FJX90	1
8	50927	Fitting, MJT-4	3

High Speed Circuit -- 5492RT, 6092RT, 3392RT #13600045~

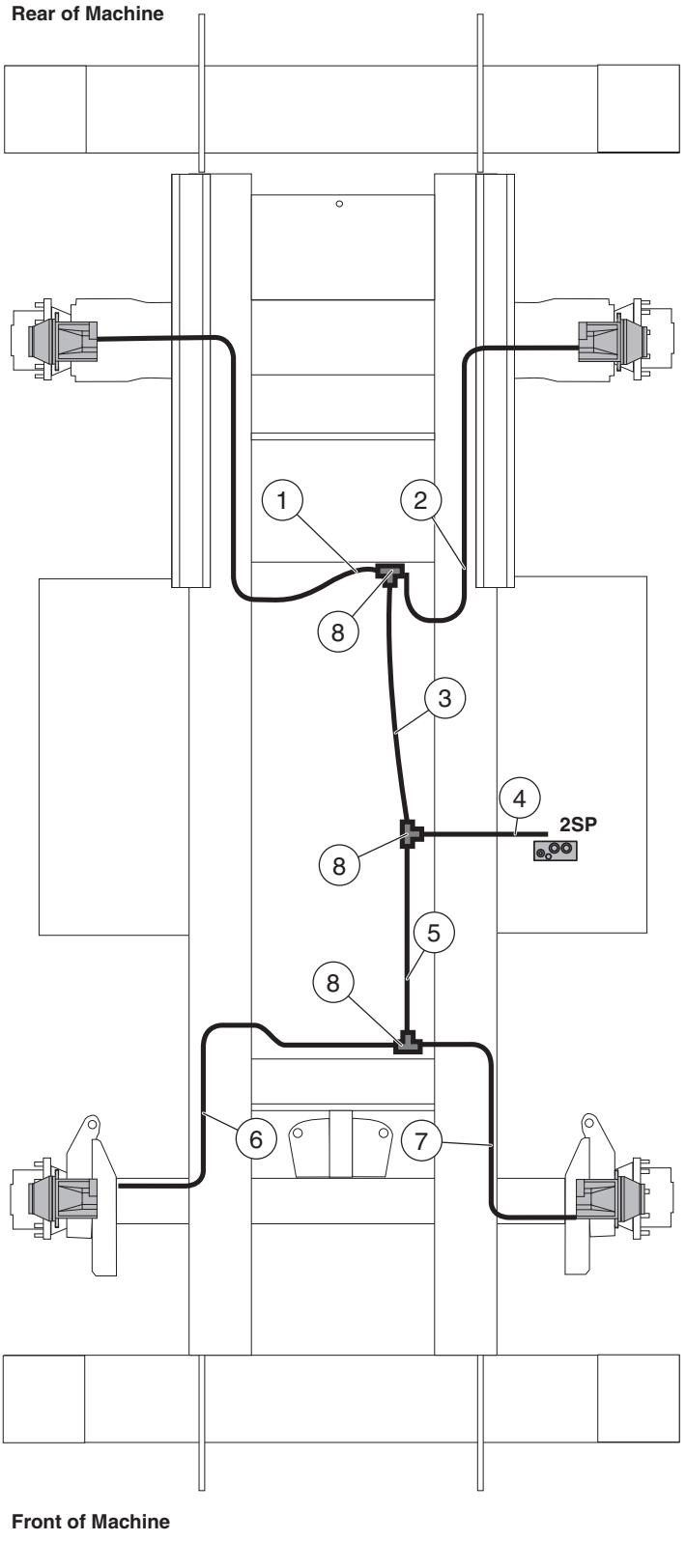

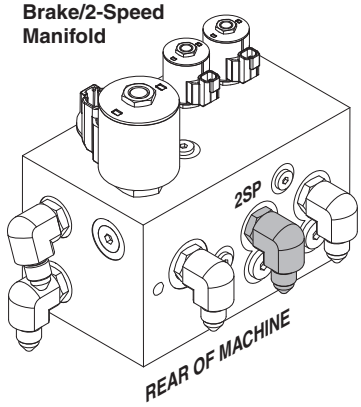

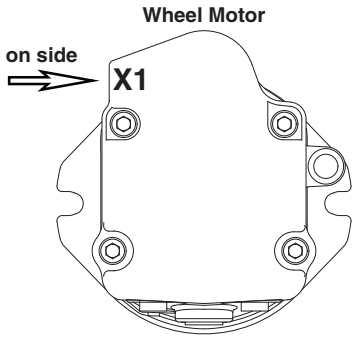

ILLUSTRATION No. ART_3509 92RT Series

HIGH SPEED CIRCUIT, 5492RT, 6092RT, 3392RT-T #13600045~

Item	Part Number	Description	Qty.
1	52078	Hose Assy, 1/4” x 90”, 4G4FJX-4G4FJX	1
2	52079	Hose Assy, 1/4” x 66”, 4G4FJX-4G4FJX90	1
3	52080	Hose Assy, 1/4” x 19”, 4G4FJX-4G4FJX	1
4	52081	Hose Assy, 1/4” x 38”, 4G4FJX-4G4FJX	1
5	52082	Hose Assy, 1/4” x 14”, 4G4FJX-4G4FJX	1
6	52085	Hose Assy, 1/4” x 124”, 4G4FJX-4G4FJX	1
7	52086	Hose Assy, 1/4” x 88”, 4G4FJX-4G4FJX	1
8	50927	Fitting MJT-4	3

High Speed Circuit -- 3392RT ~#13600044

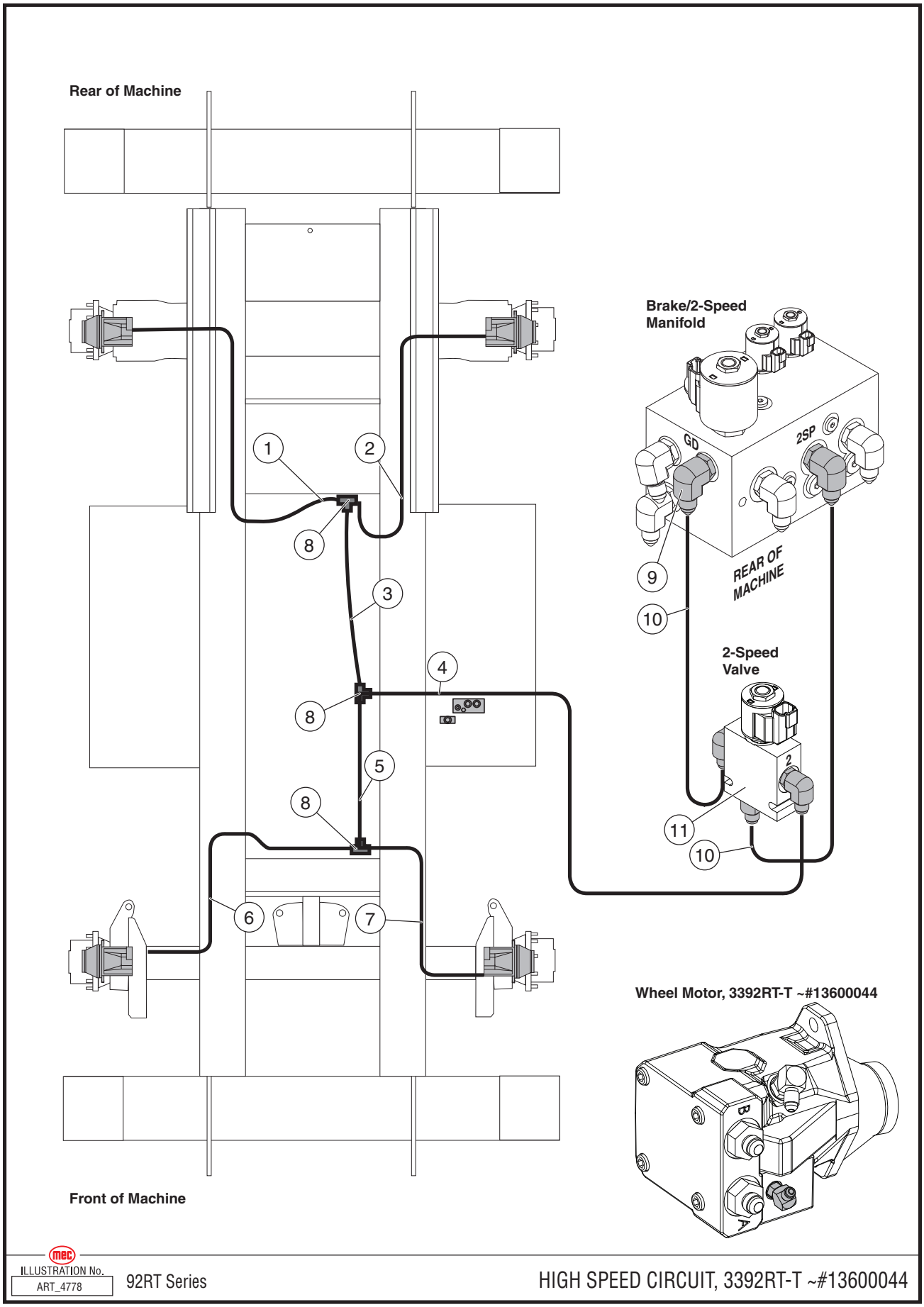

ILLUSTRATION No. ART_4778

92RT Series

HIGH SPEED CIRCUIT, 3392RT-T ~#13600044

Item	Part Number	Description	Qty.
1	52078	Hose Assy, 1/4” x 90”, 4G4FJX-4G4FJX	1
2	52079	Hose Assy, 1/4” x 66”, 4G4FJX-4G4FJX90	1
3	52080	Hose Assy, 1/4” x 19”, 4G4FJX-4G4FJX	1
4	52081	Hose Assy, 1/4” x 38”, 4G4FJX-4G4FJX	1
5	52082	Hose Assy, 1/4” x 14”, 4G4FJX-4G4FJX	1
6	52085	Hose Assy, 1/4” x 124”, 4G4FJX-4G4FJX	1
7	52086	Hose Assy, 1/4” x 88”, 4G4FJX-4G4FJX	1
8	50927	Fitting MJT-4	3
9	50665	Fitting, MB-MJ90-4-4	1
10	52668	Hose, 1/4” x 18”, 4G4FJX-4G4FJX	2
11	93067	2-Speed Valve Assembly	1

Case Drain/Return Circuit, 1 of 2

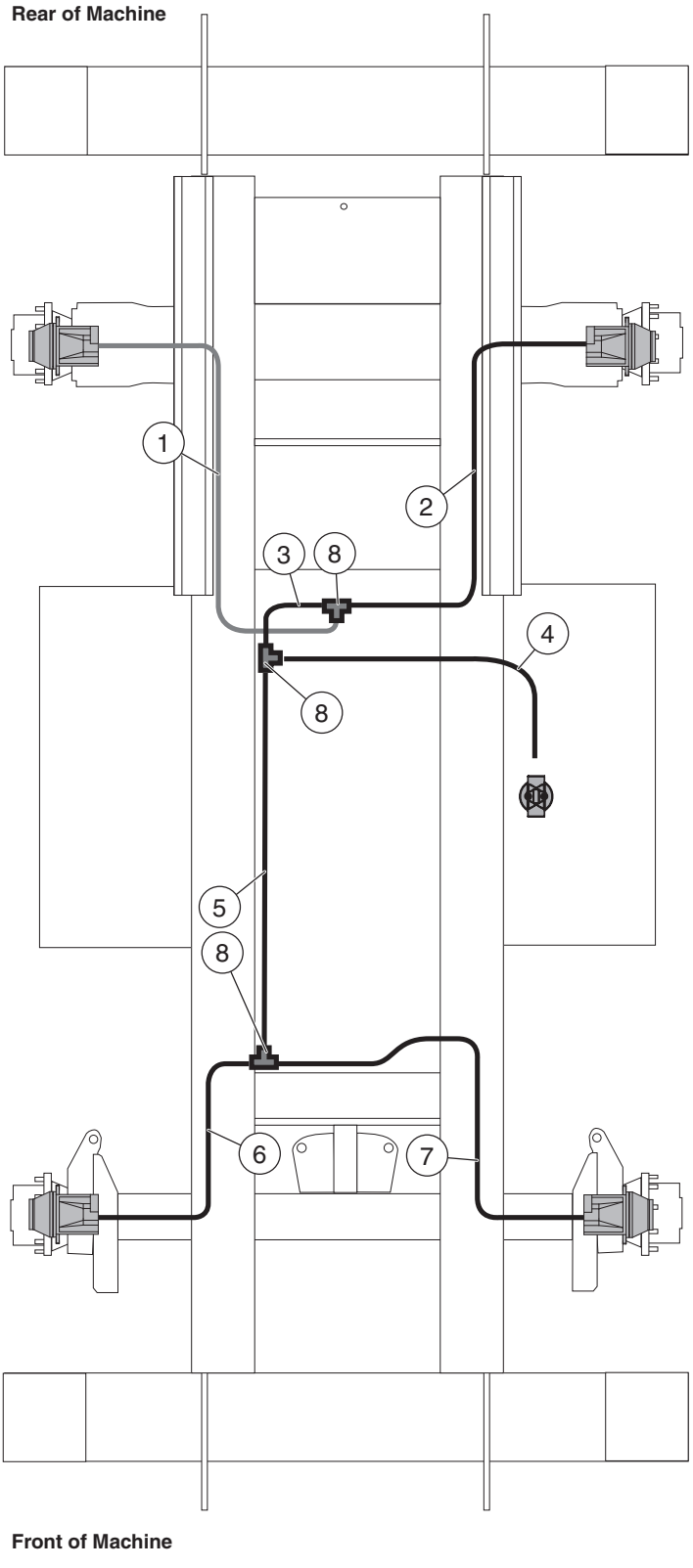

Wheel Motor, 5492RT, 6092RT, 3392RT-T #13600045~

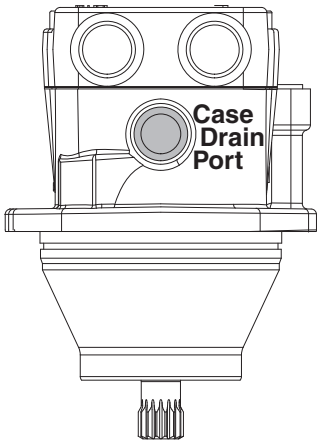

Wheel Motor, 3392RT-T ~#13600044

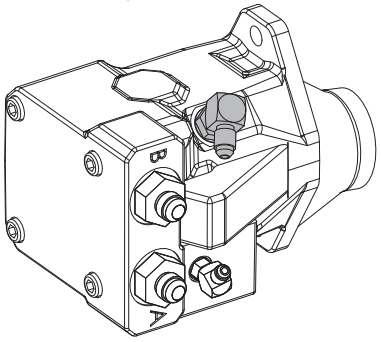

Case Drain / Return Filter Assembly

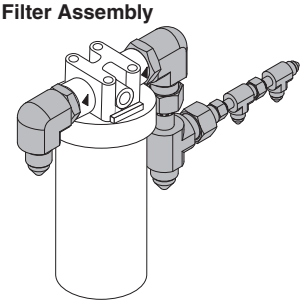

ILLUSTRATION No. ART_3510

92RT Series

CASE DRAIN CIRCUIT, 1 of 2

Item	Part Number	Description	Qty.
1	52087	Hose Assy, 3/8” x 66”, 6G6FJX-6G6FJX90	1
2	52088	Hose Assy, 3/8” x 78”, 6G6FJX-6G6FJX	1
3	52089	Hose Assy, 3/8” x 10.5”, 6G6FJX-6G6FJX90	1
4	52090	Hose Assy, 3/8” x 30”, 6G6FJX-6G6FJX	1
5	52091	Hose Assy, 3/8” x 31.5”, 6G6FJX-6G6FJX	1
6	52092	Hose Assy, 3/8” x 82”, 6G6FJX-6G6FJX	1
7	52093	Hose Assy, 3/8” x 100”, 6G6FJX-6G6FJX	1
8	50928	Fitting MJT-6	3

Case Drain/Return Circuit, 2 of 2 (continued)

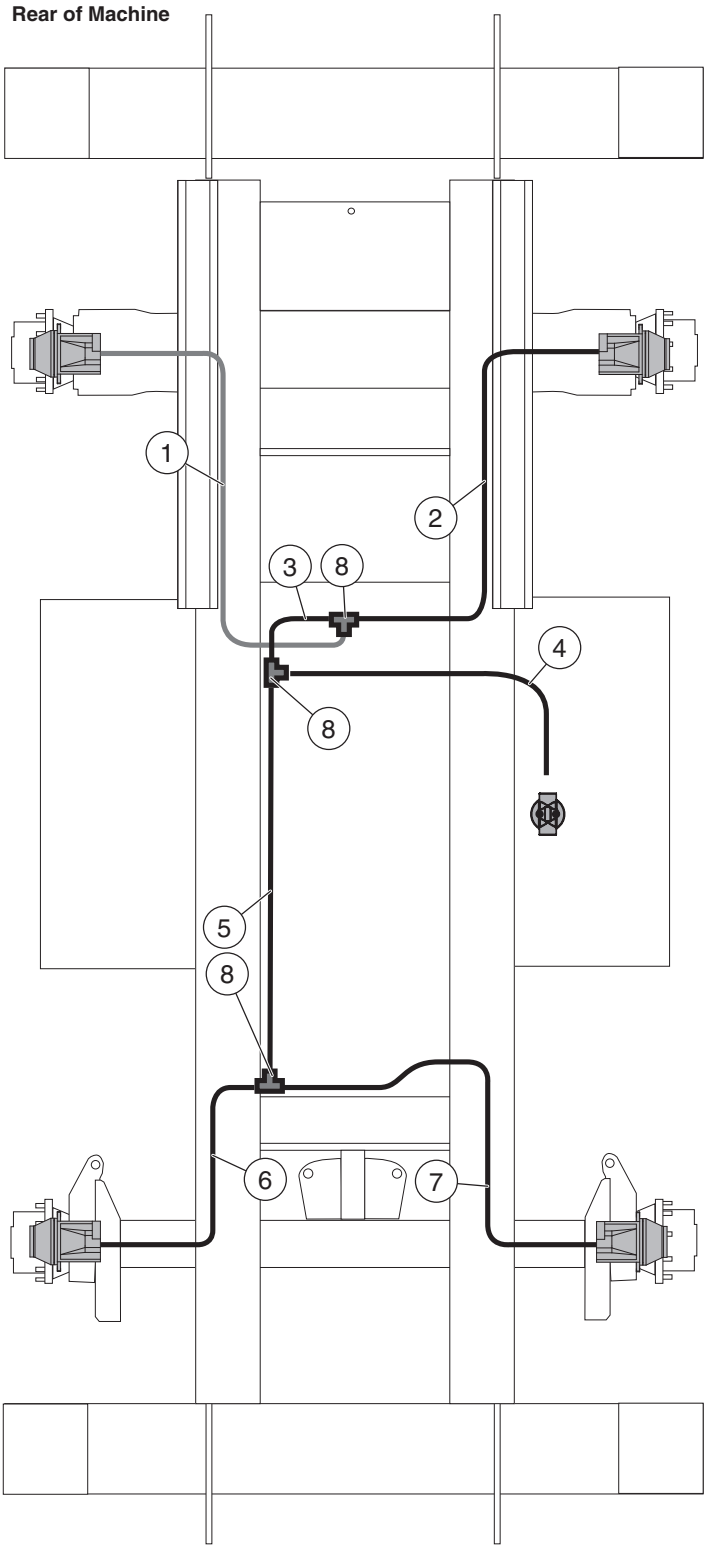

Wheel Motor, 5492RT, 6092RT, 3392RT-T #13600045~

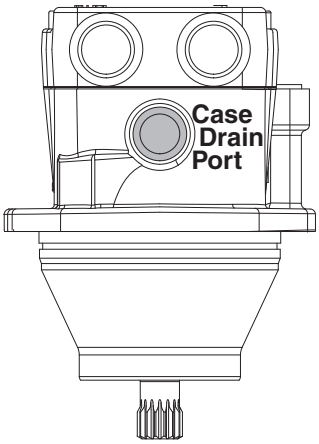

Wheel Motor, 3392RT-T ~#13600044

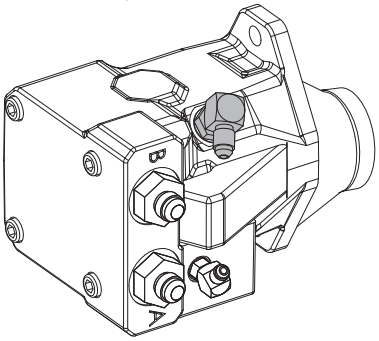

Case Drain / Return Filter Assembly

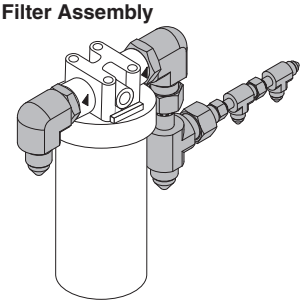

ILLUSTRATION No. ART_3510

92RT Series

CASE DRAIN CIRCUIT, 1 of 2

Item	Part Number	Description	Qty.
9	--	--	--
10	--	--	--
11	52087	Hose Assy, 3/8” x 66”, 6G6FJX-6G6FJX90	1
12	52112	Hose Assy, 1/4” x 26”, 4G4FJX-4G4FJX	1
13	52111	Hose Assy, 1/2” x 27”, 8G6FJX-8G8FJX	1

Steering Circuit

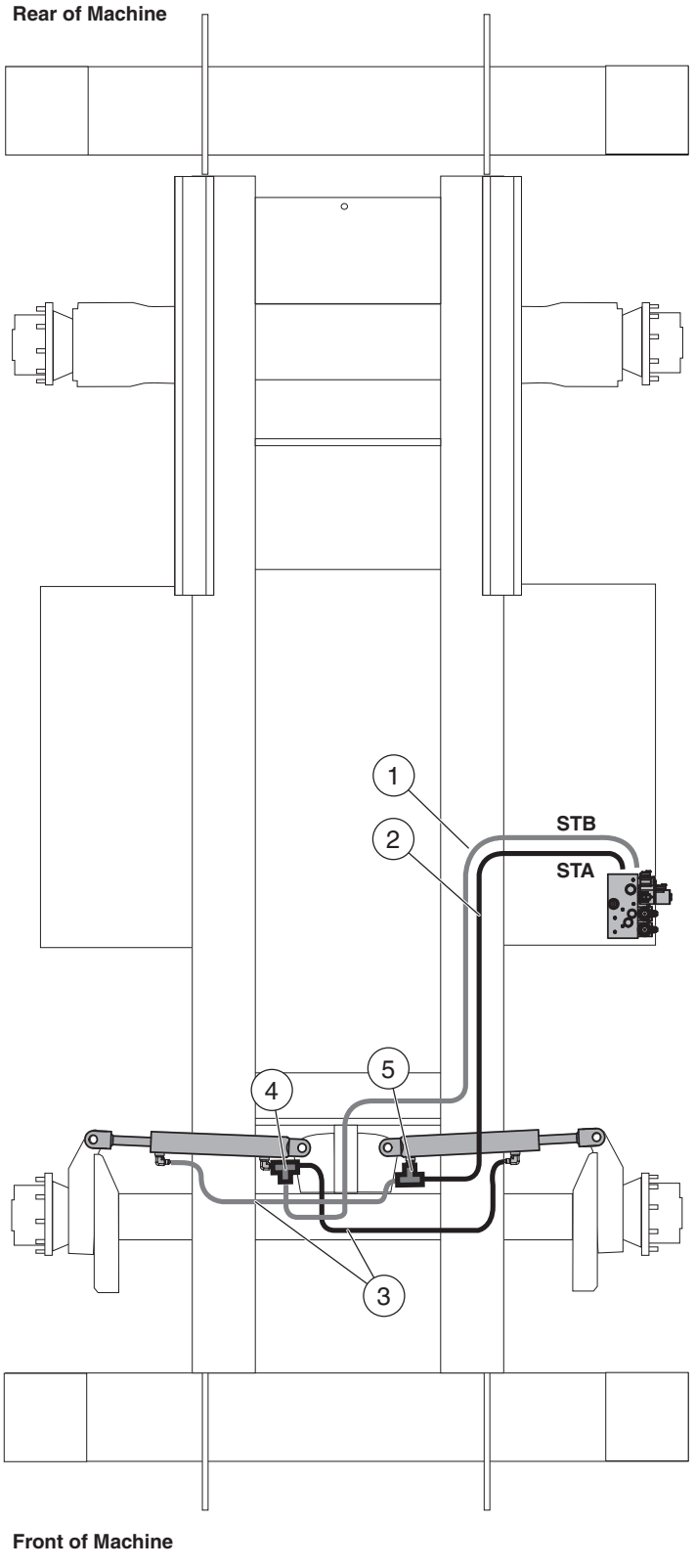

Function Manifold

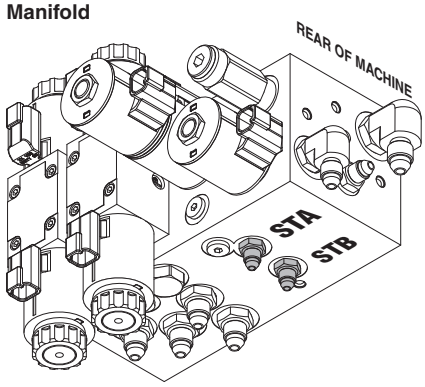

Steer Cylinder

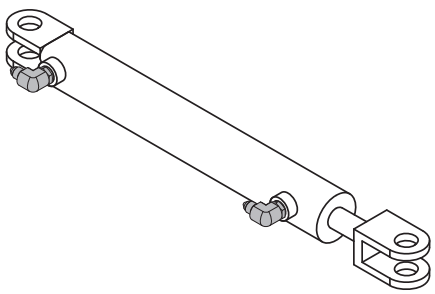

ILLUSTRATION No. ART_3511

92RT Series

STEER CIRCUIT

Item	Part Number	Description	Qty.
1	52094	Hose Assy, 3/8” x 91.5”, 6G6FJX-6G6FJX90	1
2	52084	Hose Assy, 3/8” x 79.5”, 6G6FJX-6G6FJX90	1
3	52095	Hose Assy, 3/8” x 29.5”, 6G6FJX-6G6FJX	2
4	50902	Fitting, MJ-MJ-FJXT-6	1
5	50893	Fitting, MJ-FJX-MJT-6	1

Outrigger Circuit

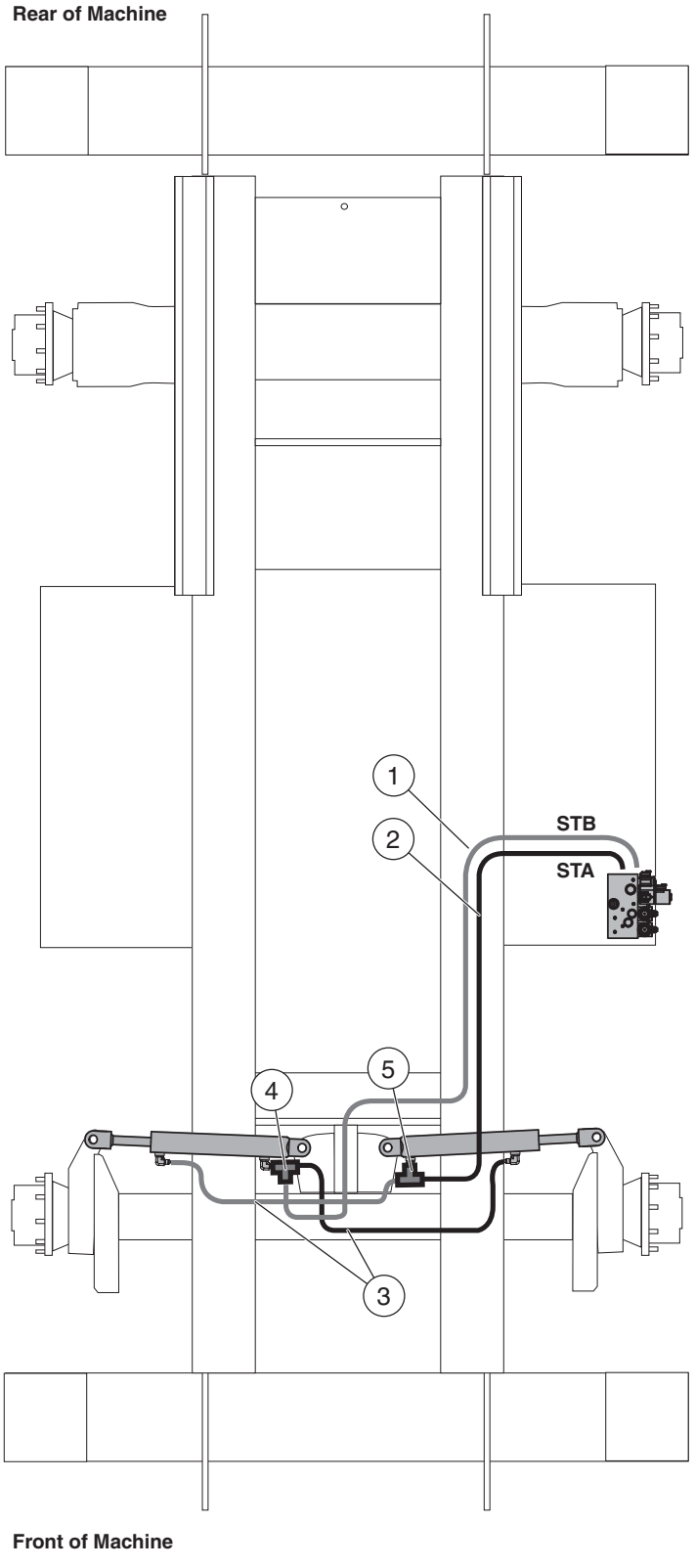

Function Manifold

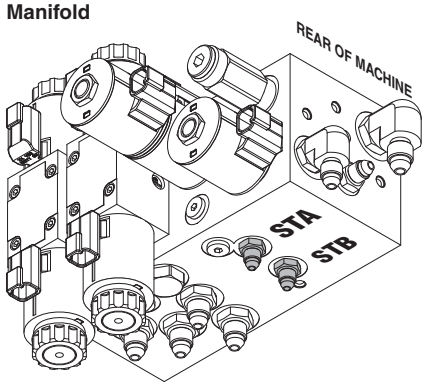

Steer Cylinder

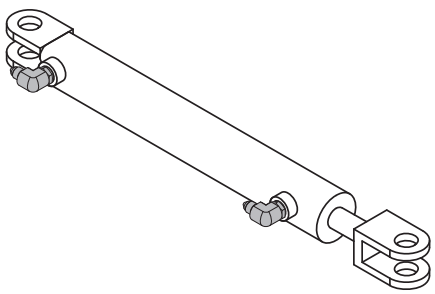

ILLUSTRATION No. ART_3511

92RT Series

STEER CIRCUIT

Item	Part Number	Description	Qty.
1	52096	Hose Assy, 3/8” x 91”, 6G6FJX	1
2	52097	Hose Assy, 3/8” x 49”, 6G6FJX	1
3	52098	Hose Assy, 3/8” x 99”, 6G6FJX	1
4	52078	Hose Assy, 3/8” x 90”, 6G6FJX	1
5	52099	Hose Assy, 3/8” x 44”, 6G6FJX	1
6	50928	Fitting, MJT-6	6

Axle Lock Circuit

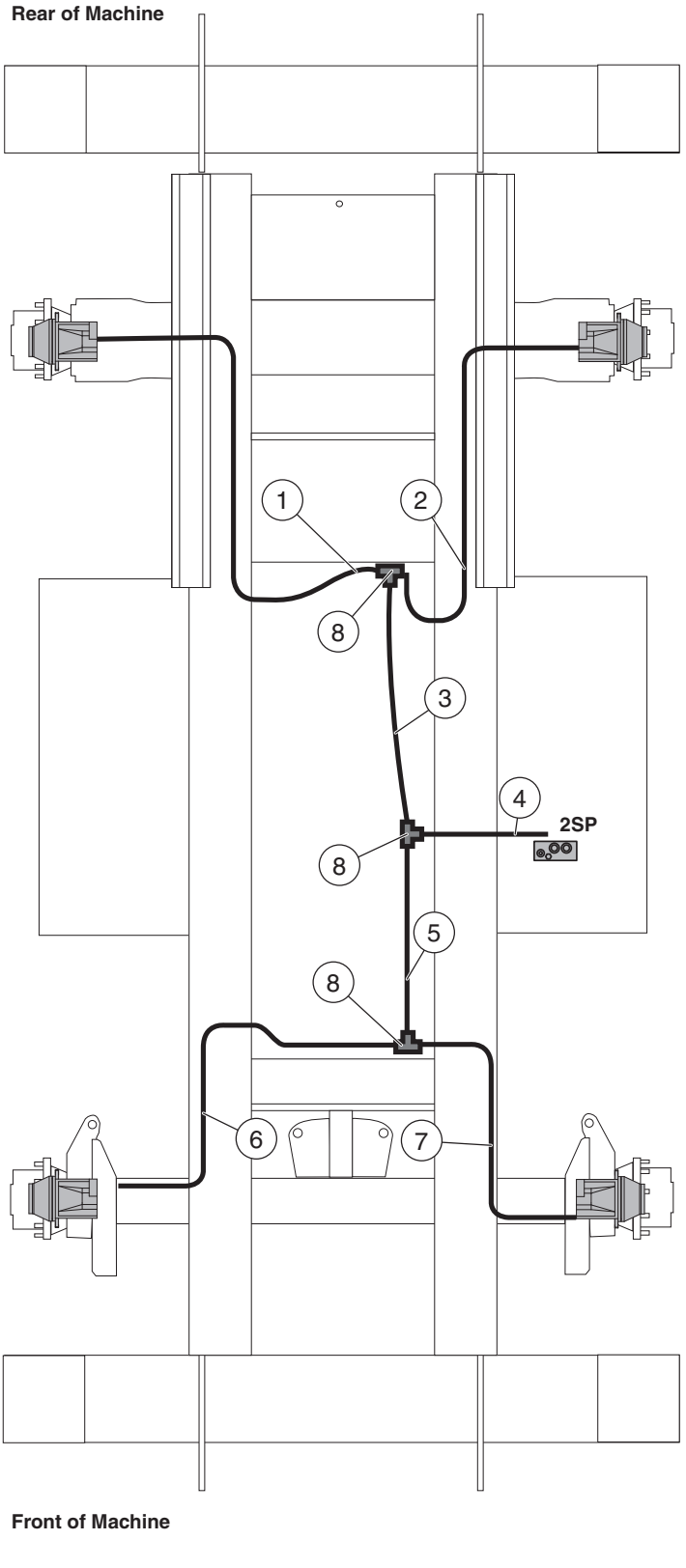

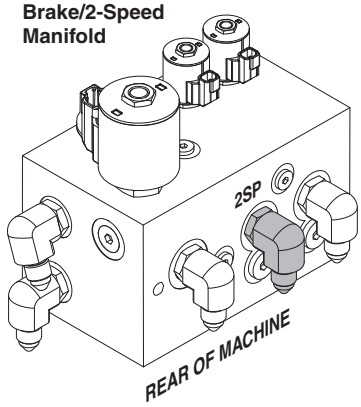

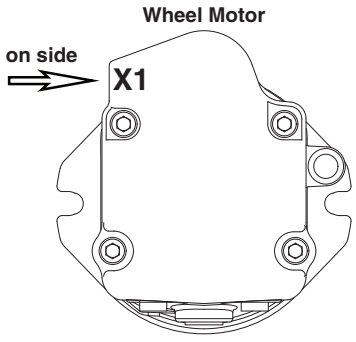

ILLUSTRATION No. ART_3509 92RT Series

HIGH SPEED CIRCUIT, 5492RT, 6092RT, 3392RT-T #13600045~

Item	Part Number	Description	Qty.
1	52102	Hose Assy, 1/4” x 58”, 4G4FJX-4G4FJX	2
2	--	--	--
3	52103	Hose Assy, 1/4” x 40”, 4G4FJX-4G4FJX	1
4	52104	Hose Assy, 1/4” x 43”, 4G4FJX-4G4FJX	1
5	52105	Hose Assy, 1/4” x 60”, 4G4FJX-4G4FJX	1
6	52106	Hose Assy, 1/4” x 54”, 4G4FJX-4G4FJX	1
7	50927	Fitting, MJT-4	2

Auxiliary Down Circuit, 5492RT, 3392RT only

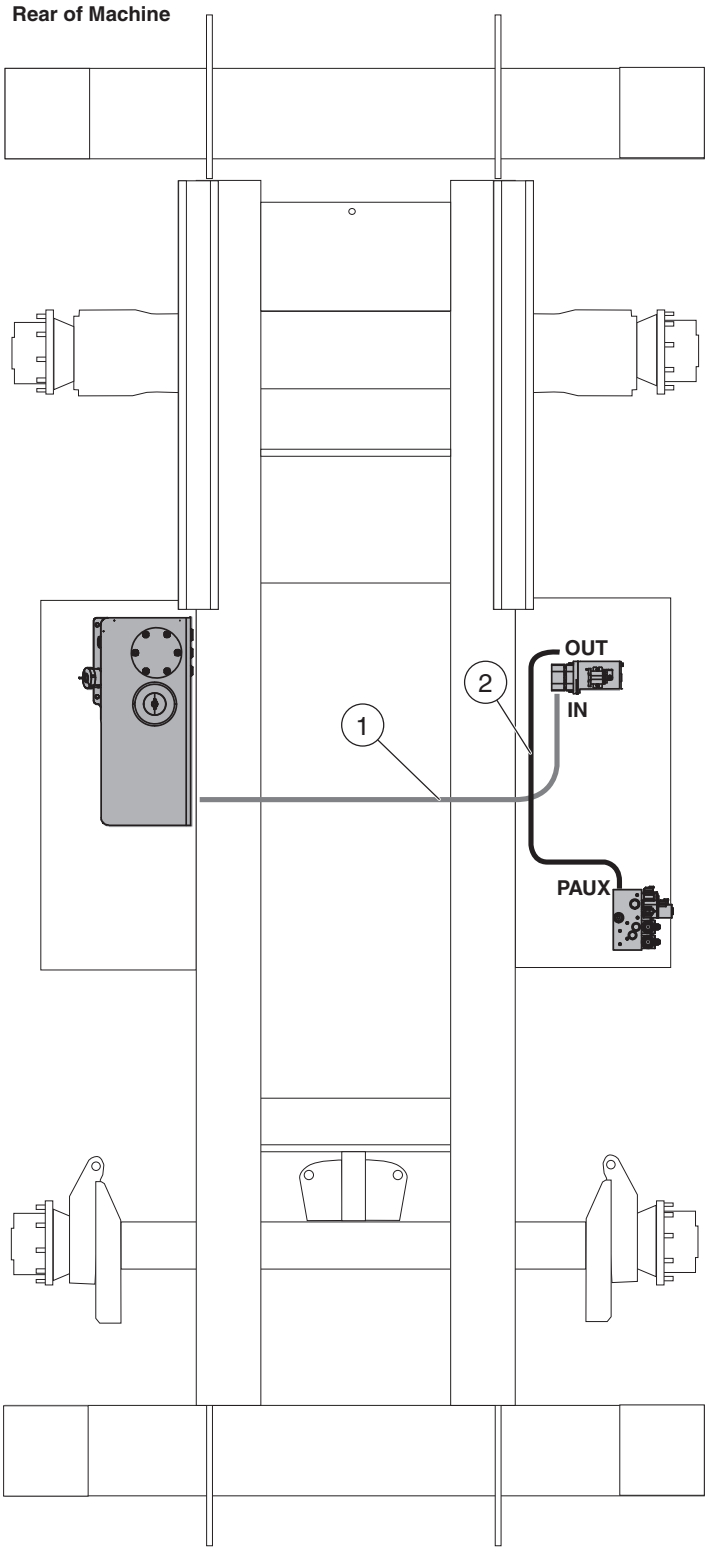

Hydraulic Tank

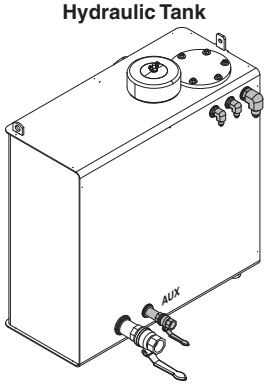

Auxillery Power Unit

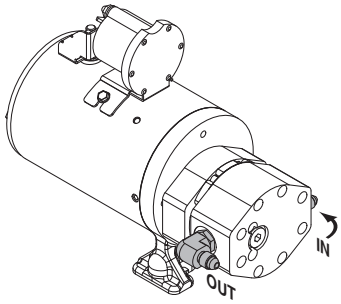

Function Manifold

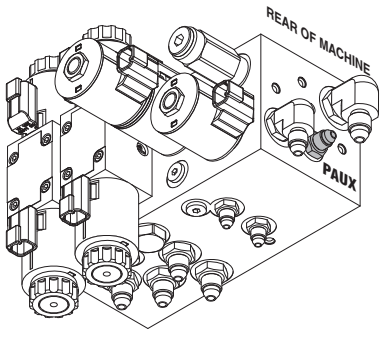

ILLUSTRATION No. ART_3514 92RT Series AUXILLARY DOWN CIRCUIT

Item	Part Number	Description	Qty.
1	52100	Hose Assy, 3/8” x 60”,6G6FJX-6G6FJX	1
2	52101	Hose Assy, 3/8” x 54”,6G6FJX-6G6FJX90	1

Drive Pump Hoses, 1 of 3

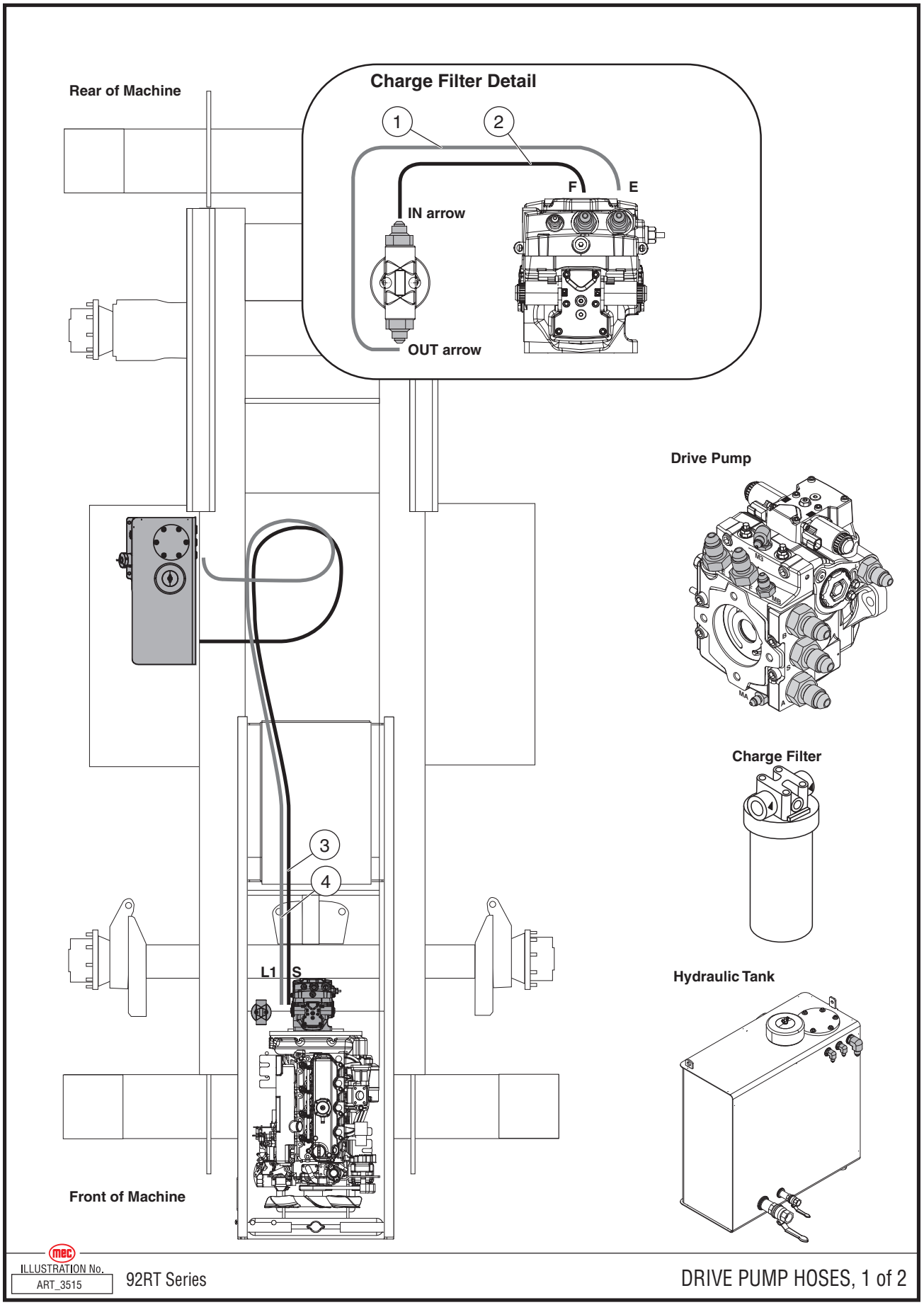

ILLUSTRATION No. ART_3515

92RT Series

DRIVE PUMP HOSES, 1 of 2

Item	Part Number	Description	Qty.
1	52107	Hose Assy, 1/2” x 44”, 8G8FJX-8G8FJX90	1
2	52108	Hose Assy, 1/2” x 40”, 8G8FJX-8G8FJX90	1
3	52110	Hose Assy, 1-1/4” x 121”, 20G20FJX-20G20FJX90	1
4	52109	Hose Assy, 1/2” x 177”, 8G8FJX-8G8FJX	1

Drive Pump Hoses, 2 of 3 (continued)

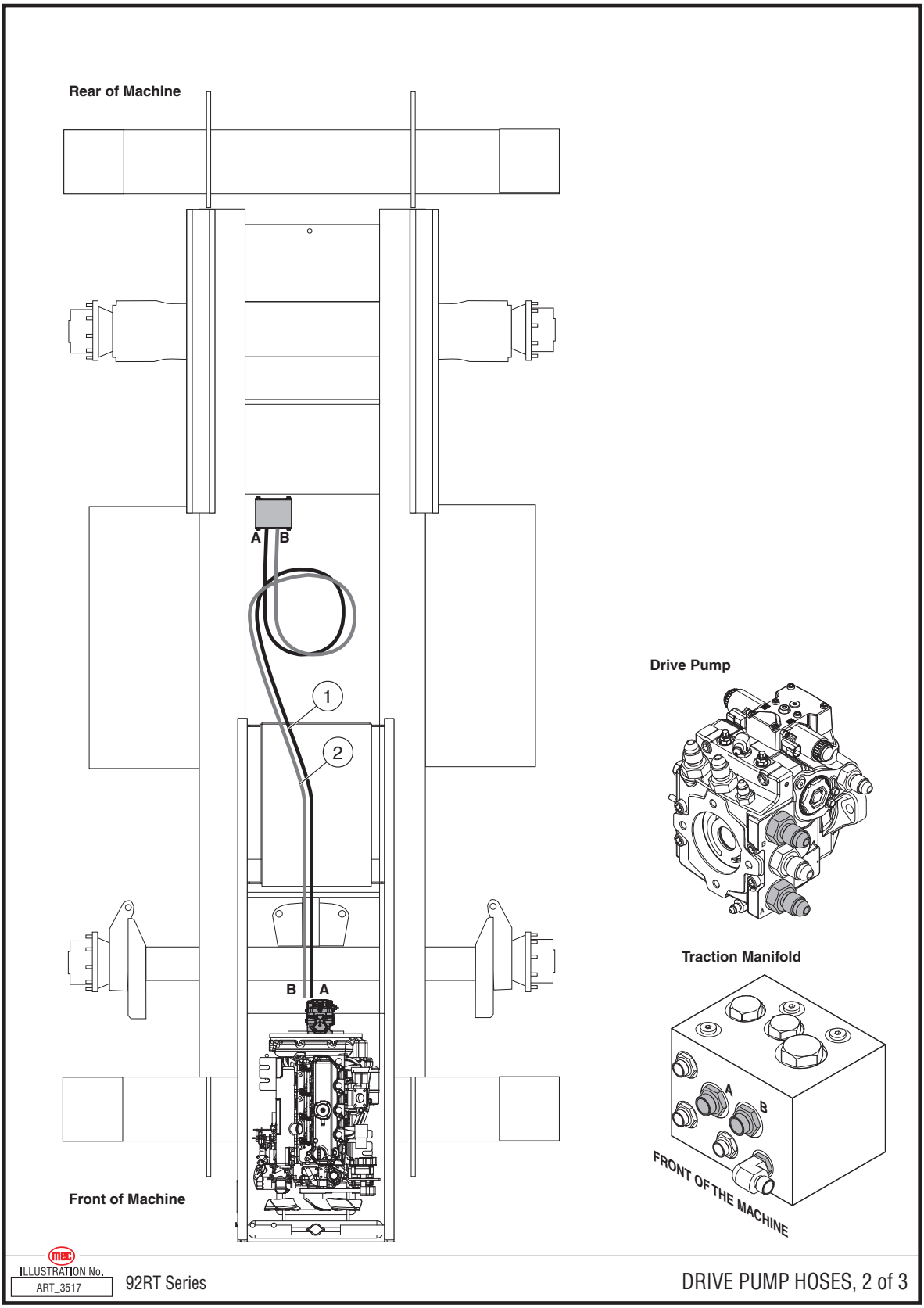

Item	Part Number	Description	Qty.
1	52072	Hose Assy, 3/4” x 133”, 12G12FFORX-12G12FFORX90	1
2	52073	Hose Assy, 3/4” x 139”, 12G12FFORX-12G12FFORX90	1

Drive Pump Hoses, 3 of 3 (continued)

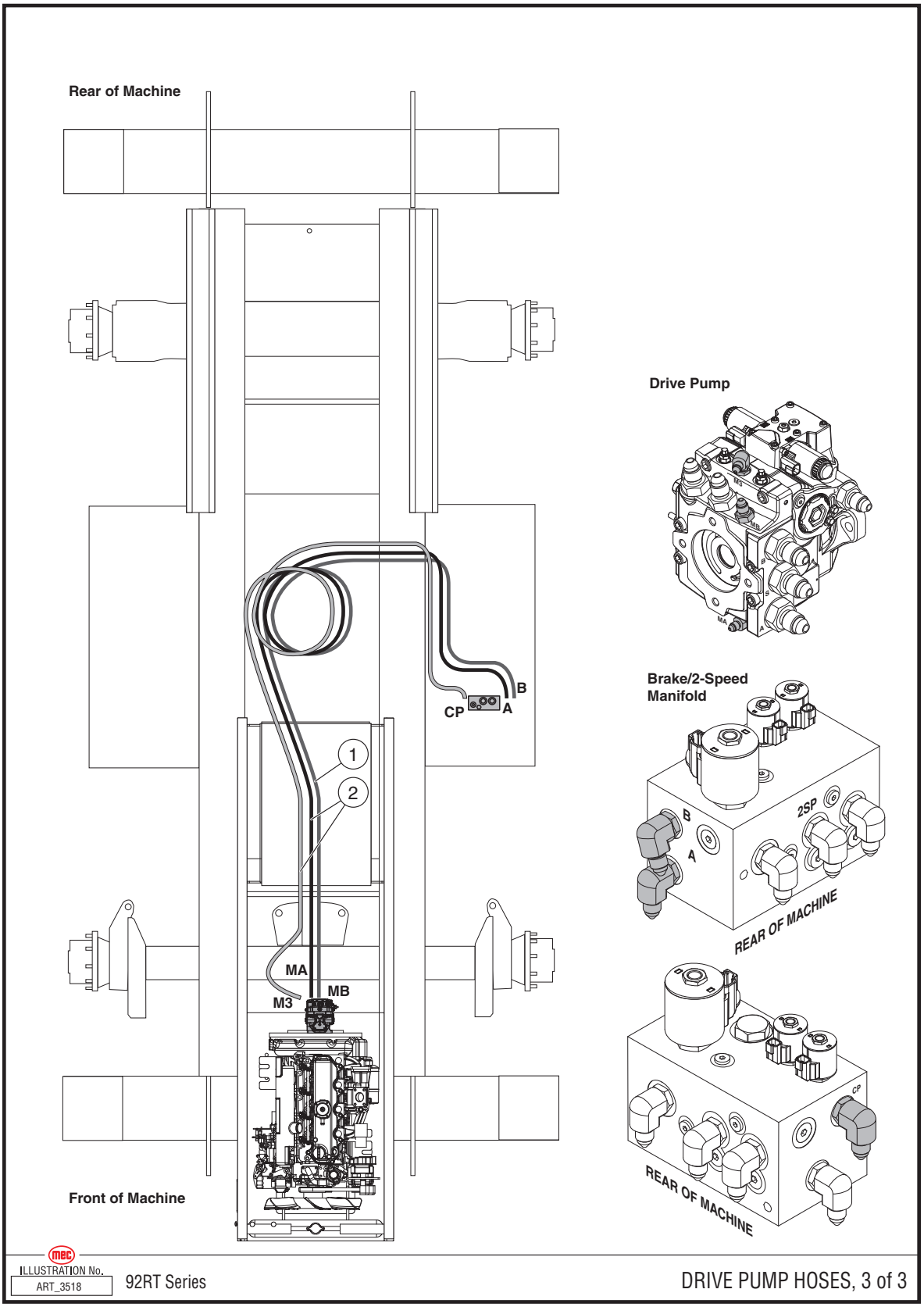

Item	Part Number	Description	Qty.
1	52074	Hose Assy, 1/4” x 150”, 4G4FJX-4G4FJX	1
2	52075	Hose Assy, 1/4” x 150”, 4G4FJX-4G4FJX90	2

Function Pump Circuit

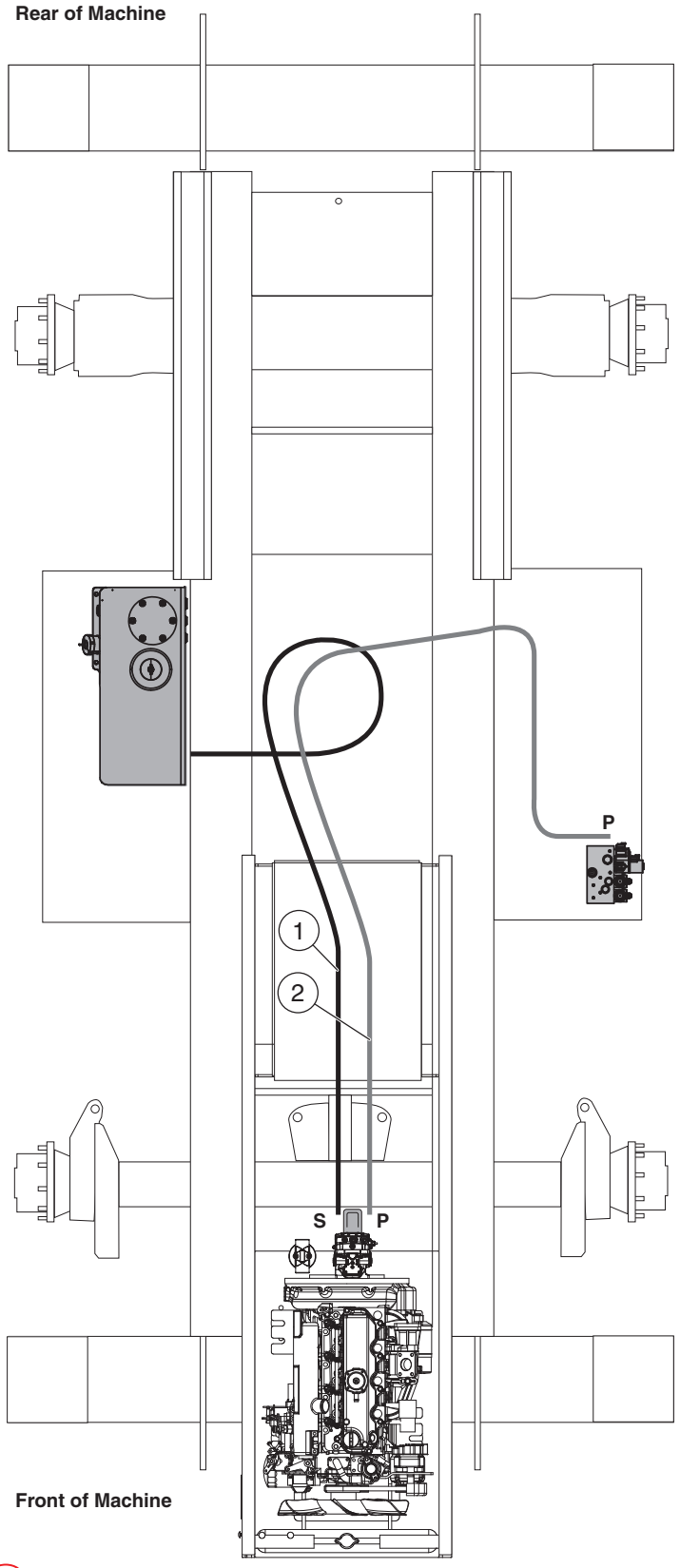

Hydraulic Tank

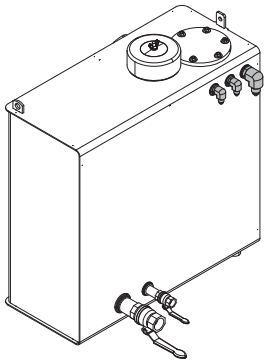

Function Pump

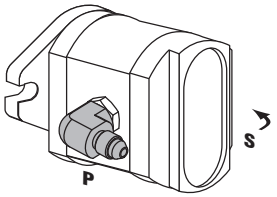

Function Manifold

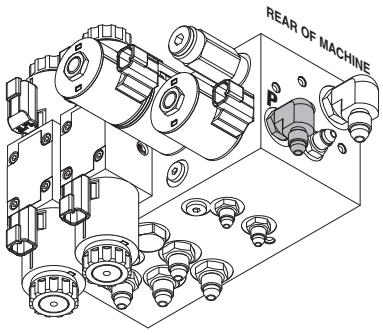

ILLUSTRATION No. ART_3516

92RT Series

FUNCTION PUMP CIRCUIT

Item	Part Number	Description	Qty.
1	52076	Hose Assy, 3/4” x 126”, 12GFJX-12GFJX	1
2	52077	Hose Assy, 1/2” x 160”, 8GFJX-8GFJX	1

Module Installation

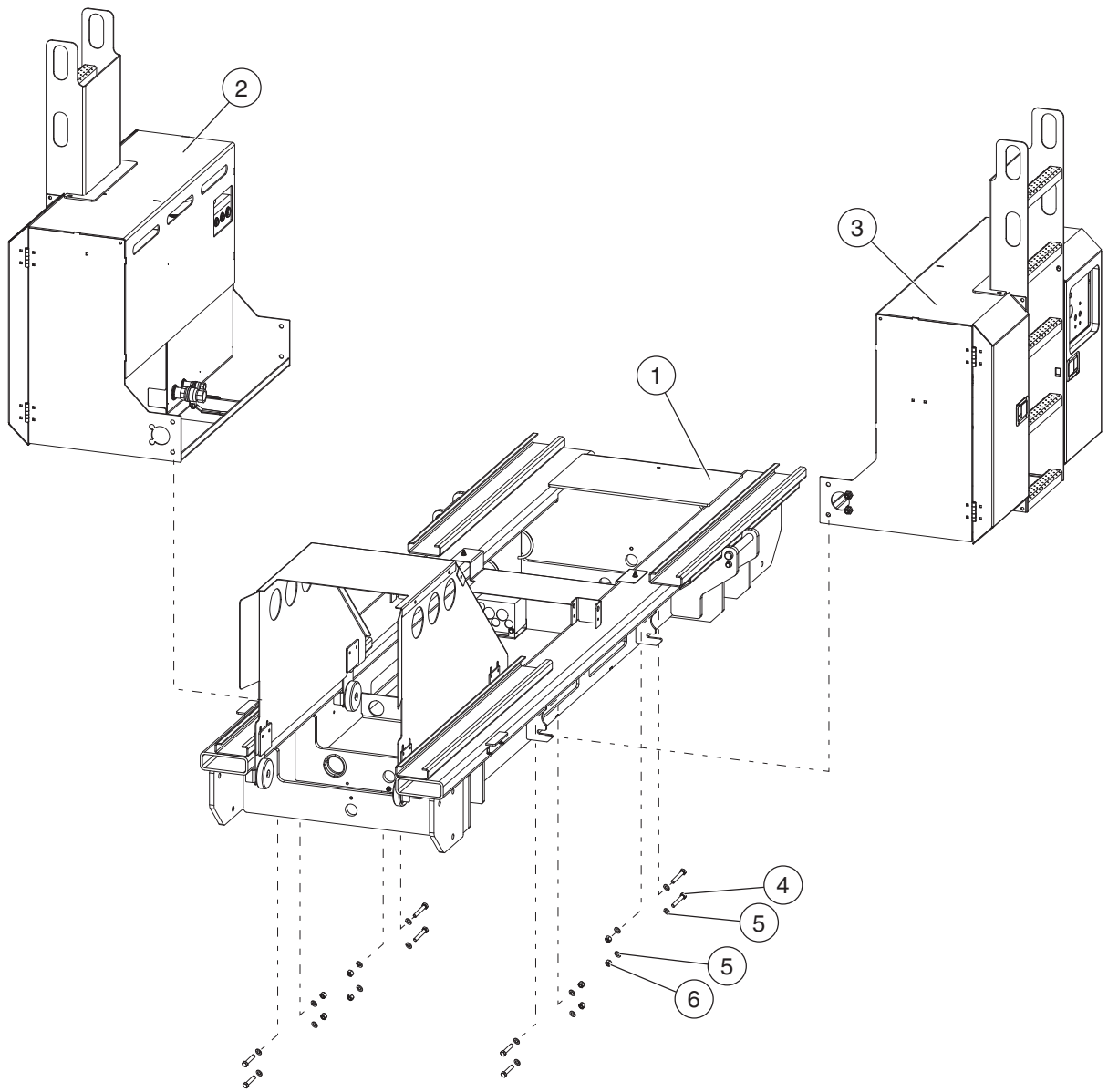

ILLUSTRATION No. ART_3328

92RT Series

Chassis/Modules

Item	Part Number	Description	Qty.
1	REF	Chassis Assembly	1
2	REF	Fluids/Tank Module	1
3	REF	Controls Module	1
4	50032	Bolt, M8 x 30	8
5	50061	Washer, M8 Std	16
6	50048	Nut, M8 Nylock	8

REF - Reference

Control Module, Drawing 1 of 2

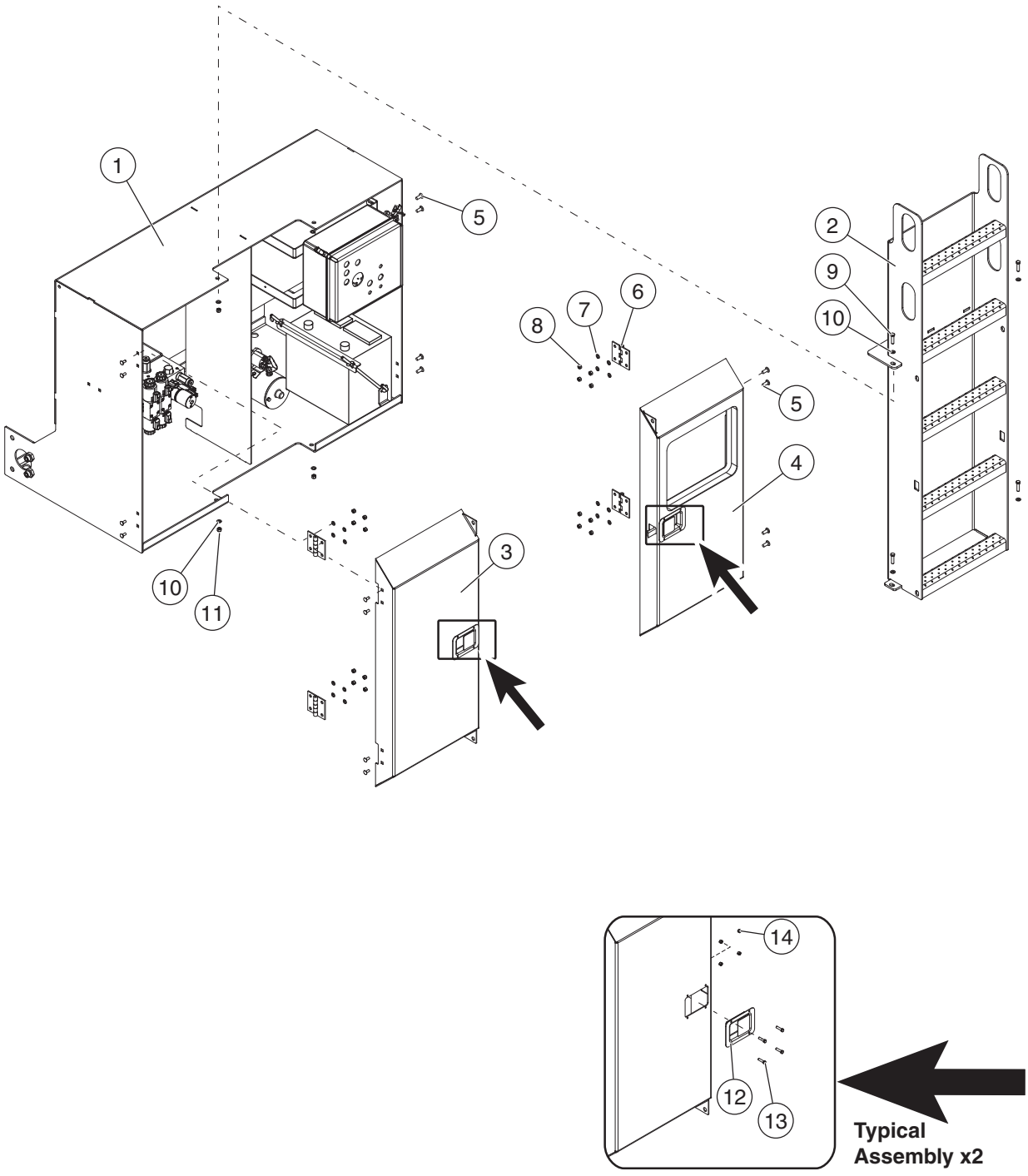

ILLUSTRATION No. ART_3325 92RT Series CONTROL MODULE, #1 of 2

Item	Part Number	Description	Qty.
1	17456	Cabinet Weldment	1
2	17116	5492RT, 6092RT -- Ladder Weldment	1
	17545	3392RT -- Ladder Weldment	1
3	17319	Module Door Weldment	1
4	17485	Module Door Weldment	1
5	50225	Bolt, Carriage, M8 x 20	16
6	17968	Hinge, Door	4
7	50001	Washer, M8 Std	16
8	50048	Nut, M8 Nylock	16
9	50039	Bolt, M12 x 30	4
10	50003	Washer, M12 Std	8
11	50050	Nut, M12 Nylock	4
12	17952	Door Latch	2
13	50321	Screw, M4 x 10	8
14	50285	Nut, M4 Nylock	8
15	--	--	--
16	--	--	--
17	--	--	--
18	--	--	--

Control Module, Drawing 2 of 2

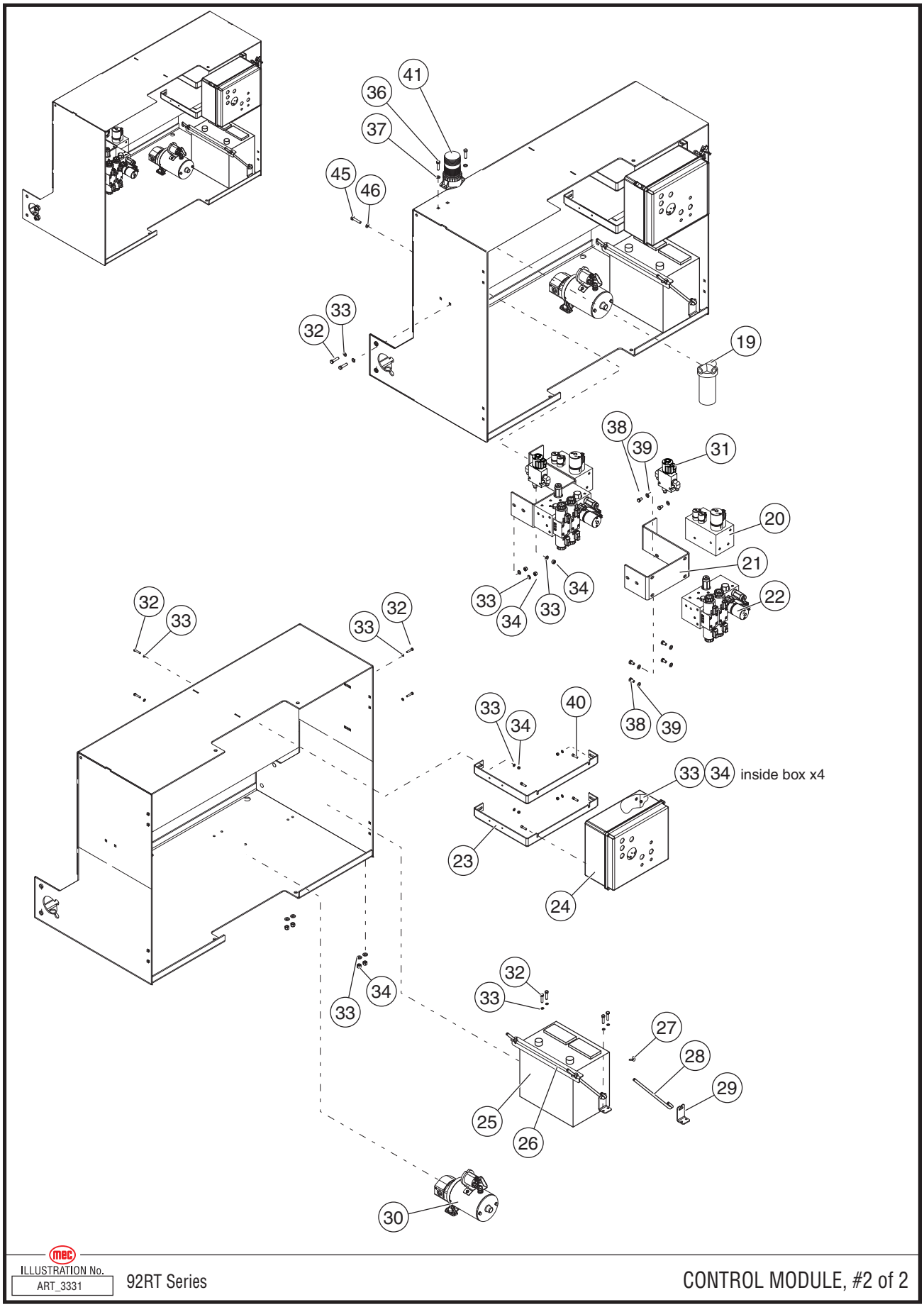

ILLUSTRATION No. ART_3331

92RT Series

CONTROL MODULE, #2 of 2

Item	Part Number	Description	Qty.
--	84103	Control Module Assembly	--
19	REF	Hydraulic Fluid Filter -- See Section 19 - Hydraulics	1
20	REF	Brake Manifold -- See Section 19 - Hydraulics	1
21	17351	Manifold Bracket	1
22	REF	Main Valve Manifold -- See Section 19 - Hydraulics	1
23	17349	Control Box Bracket	2
24	REF	Chassis Controls -- See Section 15 - Controls	1
25	REF	Battery -- See “Wiring Harness & Electrical Components” on Page 311	1
26	17475	Bracket, Battery Hold-Down	1
27	HDW6110	Wing Nut	2
28	22563	J-Bolt, Battery Hold-Down	2
29	17476	Mount, Battery Hold-Down	2
30	REF	Hydraulic Pump, Auxiliary Power -- See Section 19 - Hydraulics	1
31	REF	3392RT ~#13600044 only -- 2-Speed Valve -- See Section 19 - Hydraulics	--
32	50117	Bolt, M6 x 25	7
33	50000	Washer, M6 Std	14
34	50047	Nut, M6 Nylock	7
35	50018	Bolt, M8 x 80	4
36	50275	Bolt, 3/8-16 x 1.0	2
37	50131	Washer, 3/8 std	2
38	50109	Bolt, 5/16-18 x .75	6
39	50350	Washer, 5/16 std	6
40	50289	Screw, M6 x 40	4
41	92782	Beacon Light (option)	1
42	--	--	--
43	50048	Nut, M8 Nylock	4
44	--	--	--
45	50039	Bolt, M12 x 30	2
46	50003	Washer, M12 Std	2

REF - Reference

Tank Module

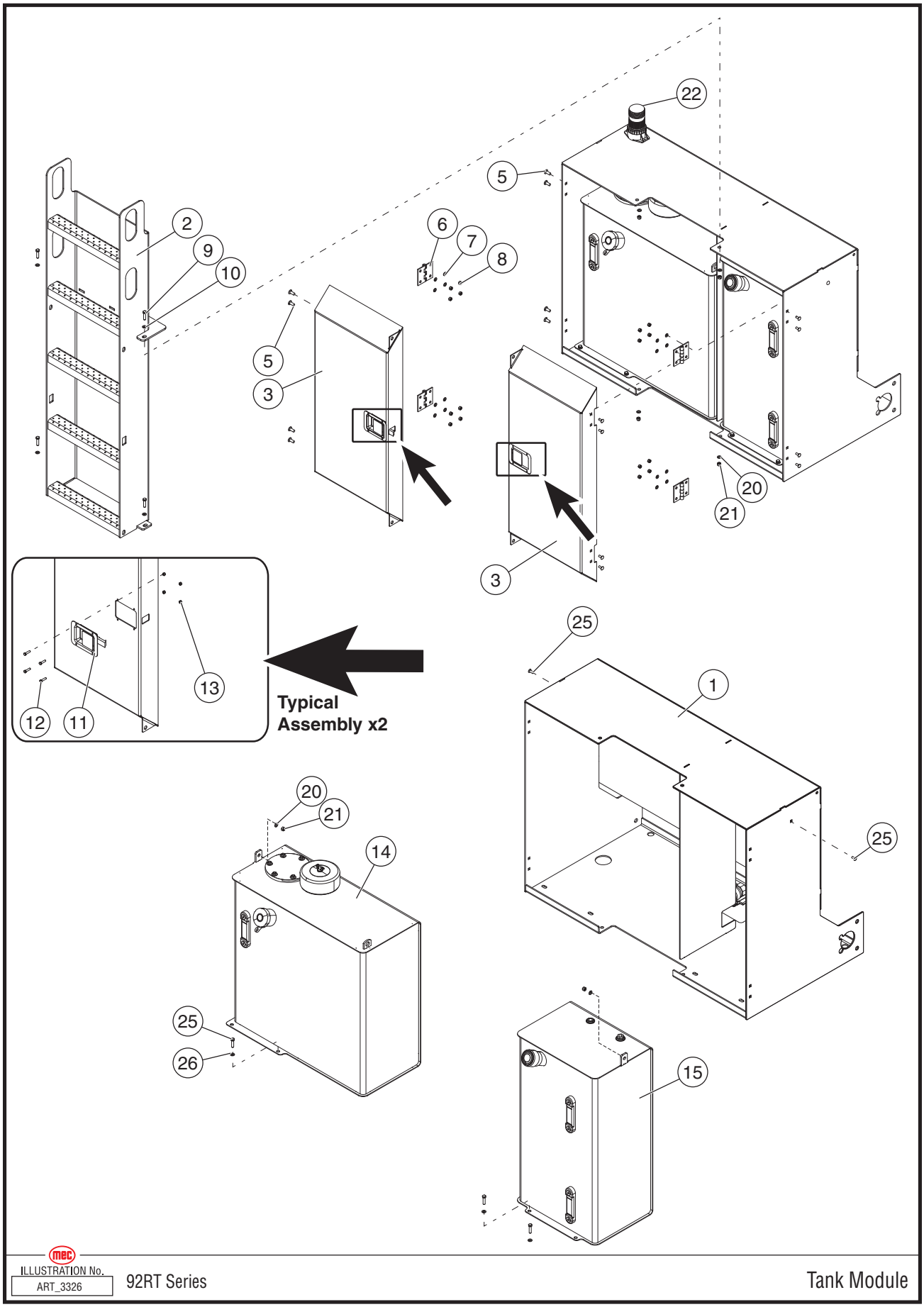

ILLUSTRATION No. ART_3326 92RT Series Tank Module

Item	Part Number	Description	Qty.
--	84104	Tank Module	--
1	17456	Cabinet Weldment	1
2	17116	5492RT, 6092RT -- Ladder Weldment	1
	17545	3392RT -- Ladder Weldment	1
3	17319	Module Door Weldment	2
4	--	--	--
5	50225	Bolt, Carriage, M8 x 20	16
6	17968	Hinge, Door	4
7	50001	Washer, M8 Std	16
8	50048	Nut, M8 Nylock	16
9	50039	Bolt, M12 x 30	4
10	50003	Washer, M12 Std	8
11	17952	Door Latch	2
12	50321	Screw, M4 x 10	8
13	50285	Nut, M4 Nylock	8
14	REF	Tank, Hydraulic -- See Section 19 - Hydraulics	1
15	88002	Fuel Tank Assembly	1
--	17843	Fuel Tank Weldment	1
--	92480	Filler Cap, Fuel Tank	1
--	92479	Sight Gauge	2
16	17410	Ball Valve, 3/4”	1
17	17409	Pipe Nipple, 3/4” x 2.00”	1
18	17407	Valve, 1-1/4”	1
19	17408	Pipe Nipple, 1-1/4” x 2.5”	1
20	50000	Washer, M6 Std	9
21	50047	Nut, M6 Nylock	9
22	92782	Beacon Light (option)	1
23	--	--	--
24	--	--	--
25	50214	Bolt, M6 x 30	

REF - Reference

Engine Enclosure

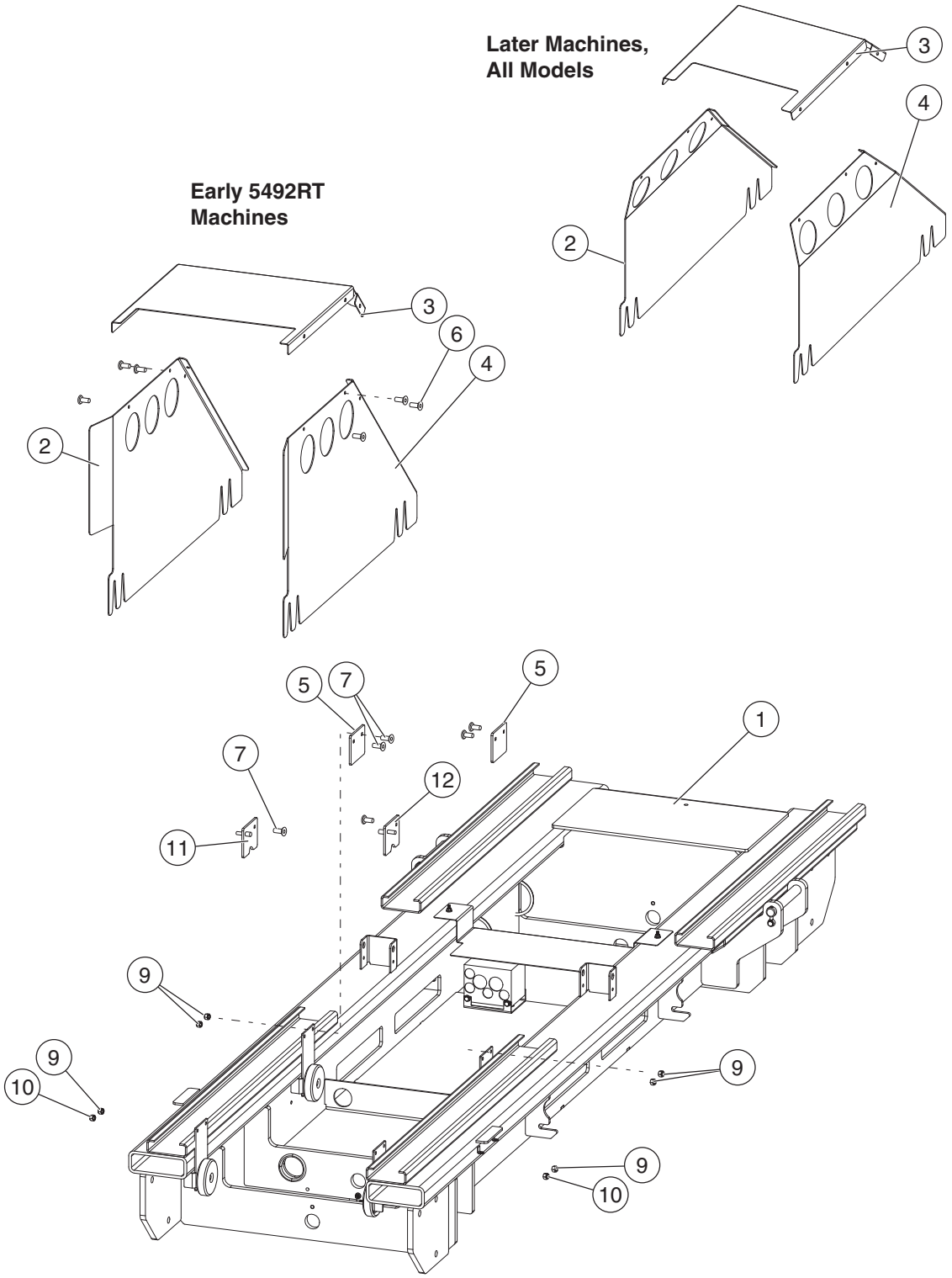

ILLUSTRATION No. ART_3333 92RT Series ENGINE ENCLOSURE

Item	Part Number	Description	Qty.
1	REF	Chassis Assembly	--
Early 5492RT, Early 3392RT Machines			
2	17604	Engine Cover, Right Side	1
3	17606	Engine Cover, Top	1
4	17605	Engine Cover, Left Side	1
Later Machines, All Models			
2	17572	Engine Cover, Right Side	1
3	17571	Engine Cover, Top	1
4	17573	Engine Cover, Left Side	1
5	17607	Clamp Plate, Engine Cover	4
6	50030	Bolt, M8 x 20	6
7	50204	Bolt, Carriage 5/16 x 1	6
8	--	--	--
9	50203	Nut, 5/16 Nylock	8
10	50048	Nut, M8 Nylock	2
11	17734	Clamp Plate	1
12	17735	Clamp Plate	1

REF - Reference

Chassis Assembly

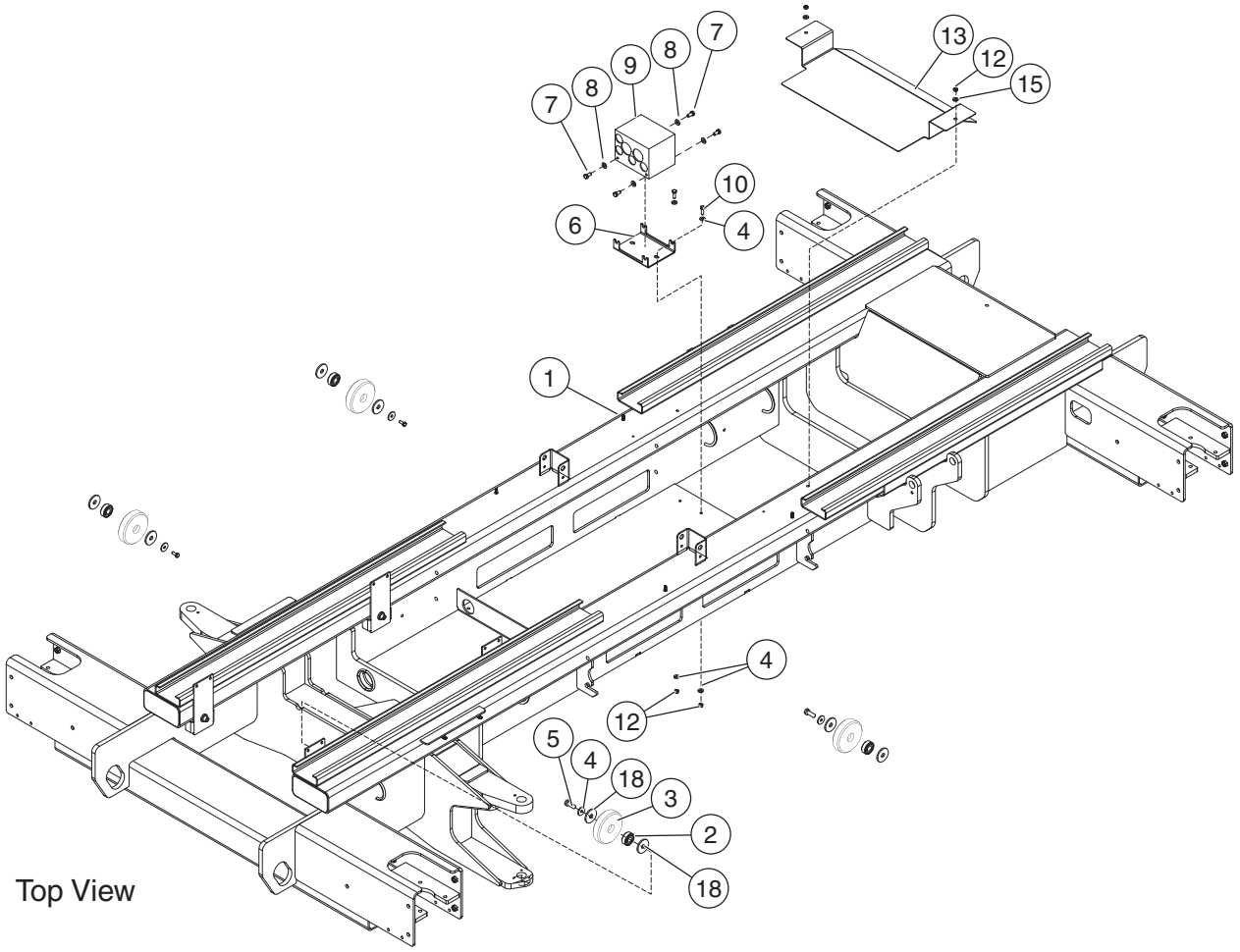

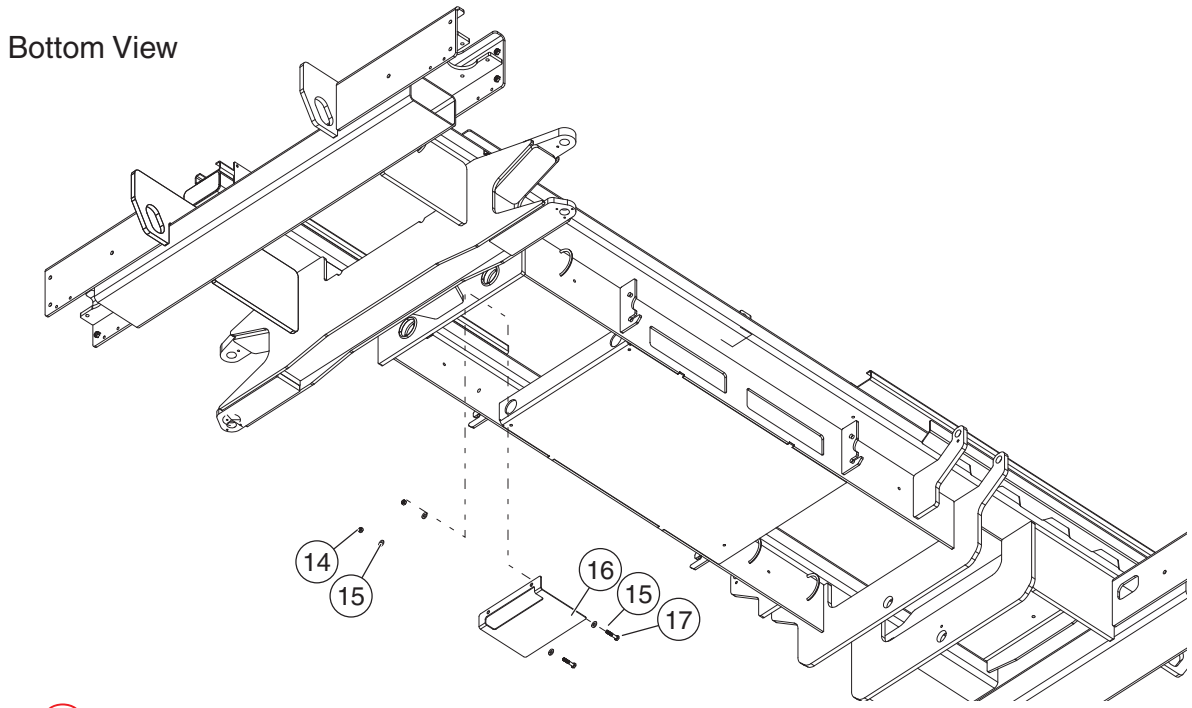

ILLUSTRATION No. ART_3317 92RT Series CHASSIS

Item	Part Number	Description	Qty.
--	--	Chassis Assembly	--
1	17182	**Early 5492RT with bolt-on outriggers** -- Chassis Weldment	1
	17862	**Later 5492RT, all 3392RT, 6092RT** -- Chassis Weldment	1
2	91593	Bearing, .75” id x 1.7813” od x .6094 w	4
3	17495	Tray Roller	4
4	50001	Washer, M8 Std	8
5	50030	Bolt, M8 x 20	8
6	17363	Bracket, Traction Valve Block	1
7	50219	Bolt, 3/8-16 x .75	4
8	50131	Washer, 3/8” ZP	4
9	REF	**5492RT, 3392RT ~#13600044** -- Traction Manifold -- See Section 19 - Hydraulics	1
10	--	--	--
11	--	--	--
12	50048	Nut, M8-1.25 Nylock	6
13	17715	**5492RT, 3392RT ~#13600044** -- Cover Plate	1
	17996	**6092RT, 3392RT #13600045~** -- Cover Plate (differs in appearance to what is shown)	1
14	--	--	--
15	50001	Washer, M8 ZP	6
16	17717	Exhaust Deflector	1
17	50014	Bolt, HHCS, M8-1.25 x 40	2
18	50005	Washer, M20 Std	8

REF - Reference

Engine Tray Assembly

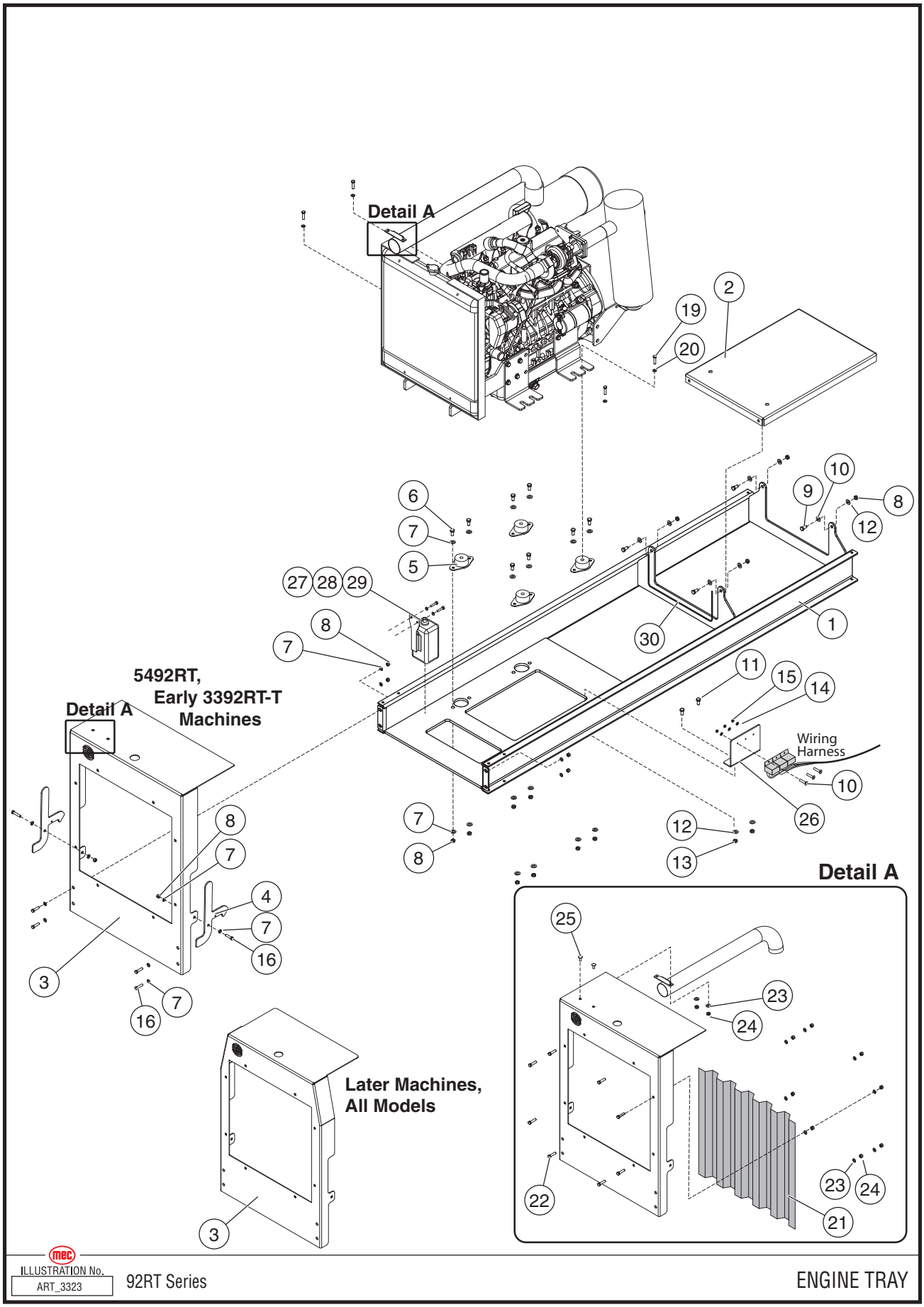

ILLUSTRATION No. ART_3323 92RT Series ENGINE TRAY

Item	Part Number	Description	Qty.
--	84108	Engine Tray Assembly	--
1	17320	Engine Tray Weldment	1
2	17352	Cover, Interior Hose Guard	1
3	17100	**5492RT, 3392RT ~#13600044** -- Radiator Support Mount	1
	17570	**6092RT, 3392RT #13600045~** -- Radiator Support Mount	1
4	17108	Engine Tray Release	2
--	91906	Spring (not shown)	2
5	17969	Engine Mount	4
6	50033	Bolt, M10 x 25	8
7	50002	Washer, M10 Std	16
8	50049	Nut, M10 Nylock	18
9	50215	Bolt, M10 x 20	4
10	50191	Screw, 10-32 Truss Head	2
11	50117	Bolt, M6 x 25	2
12	50000	Washer, M6 Std	2
13	50047	Nut, M6 Nylock	2
14	50284	Washer, #12	3
15	50238	Nut, 10-32 Nylock	3
16	50370	Bolt, BHCS M10 x 30	6
17	11870386	Spacer	2
18	50050	Nut, M12 Nylock	4
19	50036	M12 x 50	4
20	50003	M12 Std	4
21	17680	Radiator Grill	1
22	50225	Bolt, Carriage, M8 x 20	8
23	50001	Washer, M8 Std	8
24	50305	Nut, M8 Nylock	8
25	50225	Bolt, Carriage, M8 x 20	2
26	17574	Bracket, Relay Mount	1
--	17575	Cover (not shown)	1
27	91127	Coolant Overflow Tank	1
28	50028	Screw, M6 x 29	2
29	50047	Nut, M6 Nylock	2
30	92535	Trimlock	50”

Engine Components, Drawing 1 of 3

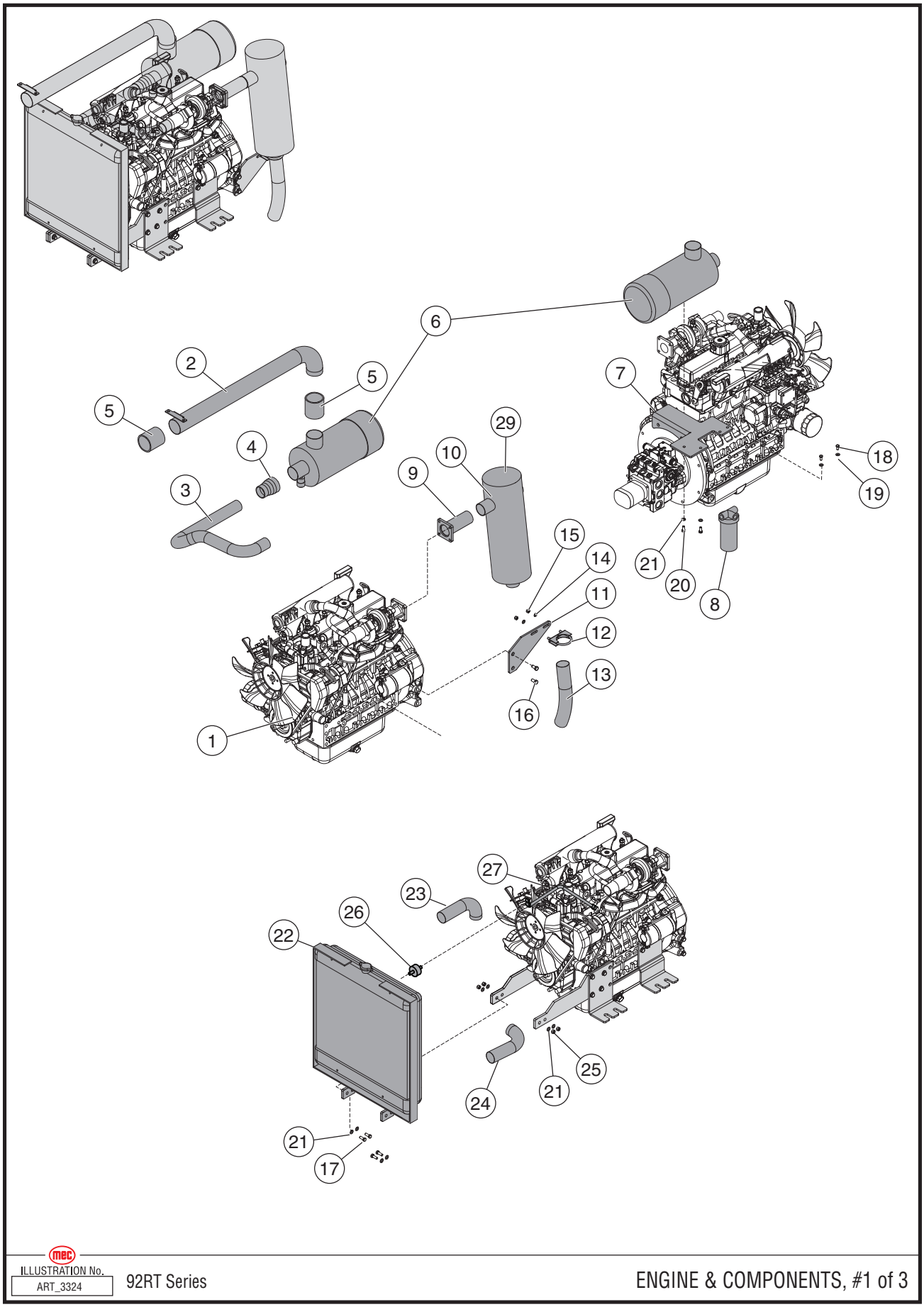

ILLUSTRATION No. ART_3324

92RT Series

ENGINE & COMPONENTS, #1 of 3

Item	Part Number	Description	Qty.
1	17964	Engine, Kubota V2403-T	1
2	17619	Intake Tube Weldment	1
3	17675	Turbo Tube Intake	1
4	17676	Hose Adapter	1
5	17677	Hose, Intake	2
--	91935	Hose Clamp	3
6	92474	Air Filter Assembly	1
--	92181	Air Filter Element	1
7	17467	Mounting Bracket, Air Filter/Charge Filter	1
8	REF	Charge Filter Assembly -- See Section 19 - Hydraulics	1
9	17635	Engine Exhaust Weldment	1
10	17627	Muffler	1
11	17630	Muffler Mounting Plate	1
12	17637	Muffler Clamp, 5/16” x 1-1/8”	1
13	17636	Exhaust Extension	1
14	50061	Washer, 5/16 Std	2
15	50203	Nut, 5/16-18 Nylock	2
16	50319	Bolt, M14 x 30	2
17	50030	Bolt, M8-1.0 x 20	4
18	50219	Bolt, 3/8-16 x .75	2
19	50006	Washer, M10 Nordlock	2
20	50030	Bolt, M8-1.25 x 20	2
21	50001	Washer, M8 Std	2
22	92186	Radiator Assembly	1
23	92468	Upper Radiator Hose	1
24	92469	Lower Radiator Hose	1
25	50305	Nut, M8 Nylock	34
26	91591	Mount, Rubber	2
--	50047	Nut, M6 Nylock (not shown)	2
27	18257	Radiator Support	1
28	--	--	--
29	92517	Exhaust Purifer Muffler	1

REF - Reference

Engine Components, Drawing 2 of 3

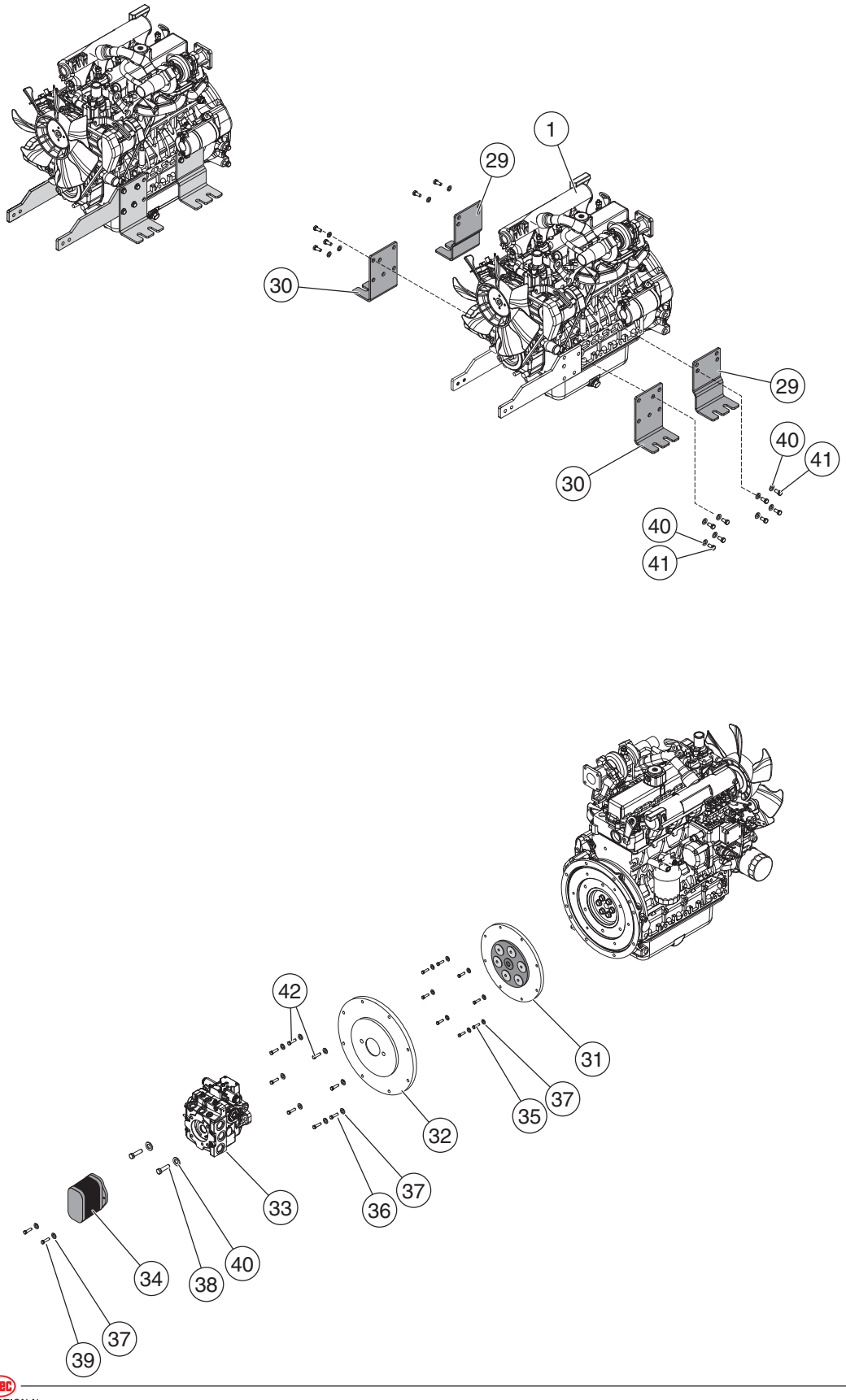

ILLUSTRATION No. ART_3332

92RT Series

ENGINE & COMPONENTS, #2 of 3

Item	Part Number	Description	Qty.
1	17964	Engine, Kubota V2403-T	1
29	17666	Bracket, Rear Engine Mount	2
30	17665	Bracket, Front Engine Mount	2
31	92473	Coupler, Motor	1
32	17976	Plate, Adapter	1
33	REF	Pump, Drive -- See Section 19 - Hydraulics	1
34	REF	Pump, Lift -- See Section 19 - Hydraulics	1
35	50116	Bolt, M10-1.25 x 25	8
36	50039	Bolt, M10-1.5 x 30	8
37	50006	Washer, M10 Nordlock	8
38	50069	Bolt, 1/2-13 x 1.5	2
39	50127	Bolt, Socket Head M10-1.5 x 30	4
40	50007	Washer, M12 Nordlock	4
41	50133	Bolt, M12-1.25 x 35	4
42	50035	Bolt, M10-1.5 x 40	2
43	--	--	--
44	--	--	--
45	--	--	--

REF - Reference

Engine Components, Drawing 3 of 3

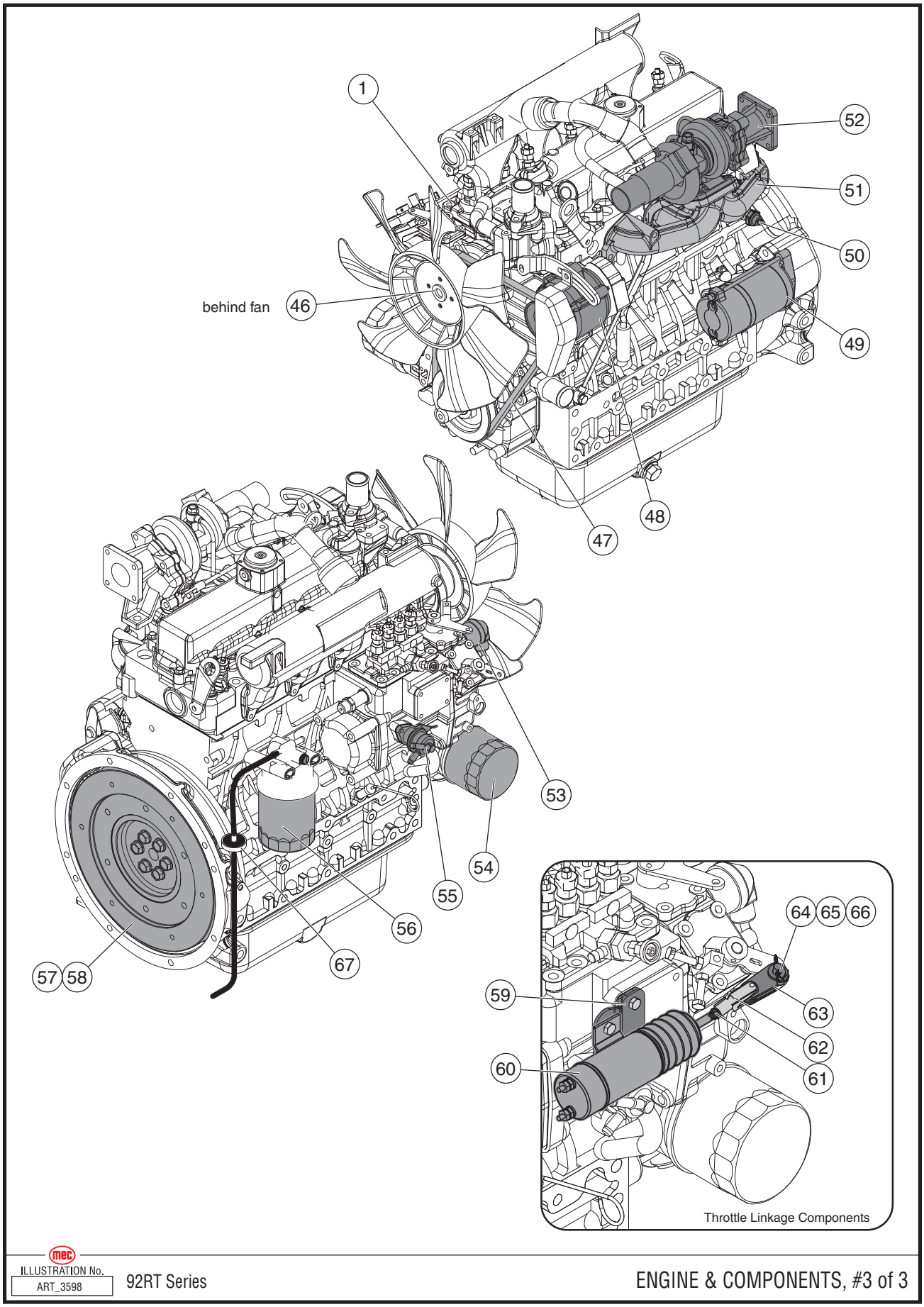

ILLUSTRATION No. ART_3598

92RT Series

ENGINE & COMPONENTS, #3 of 3

Item	Part Number	Description	Qty.
1	17964	Engine, Kubota V2403-T	--
46	92471	Water Pump	1
47	92472	Fan Belt	1
48	92178	Alternator	1
49	92177	Starter	1
50	91175	Oil Pressure Switch	1
51	92184	Exhaust Manifold	1
--	92185	Gasket, Exhaust Manifold	--
52	92470	Turbo Charger Assy	1
53	92179	Solenoid, Fuel Shutoff	1
54	92180	Oil Filter	1
55	92176	Fuel Pump	1
56	92182	Fuel Filter	1
	91123	Fuel Filter (SE-AN Model)	1
57	92183	Flywheel Assy -- Includes Item #58	1
58	92175	Ring Gear, Flywheel	1
59	17638	Bracket, Throttle Solenoid	1
60	91589	Throttle Solenoid	1
--	50028	Bolt, M6 x 20	2
--	50000	Washer, M6 Std	4
--	50047	Nut, M6 Nylock	2
61	50164	Jam Nut, 1/4-28	1
62	91117	Yoke	1
63	16347	Throttle Link	2
64	50157	Washer, 5/16 Flat	1
65	HDW91590	Pin, Clevis, 5/16 x 1	1
66	50177	Pin, Cotter, 1/8 x 1	1
67	91905	Check Valve, Fuel	1

Kubota D1803 Engine Assembly, Part 1

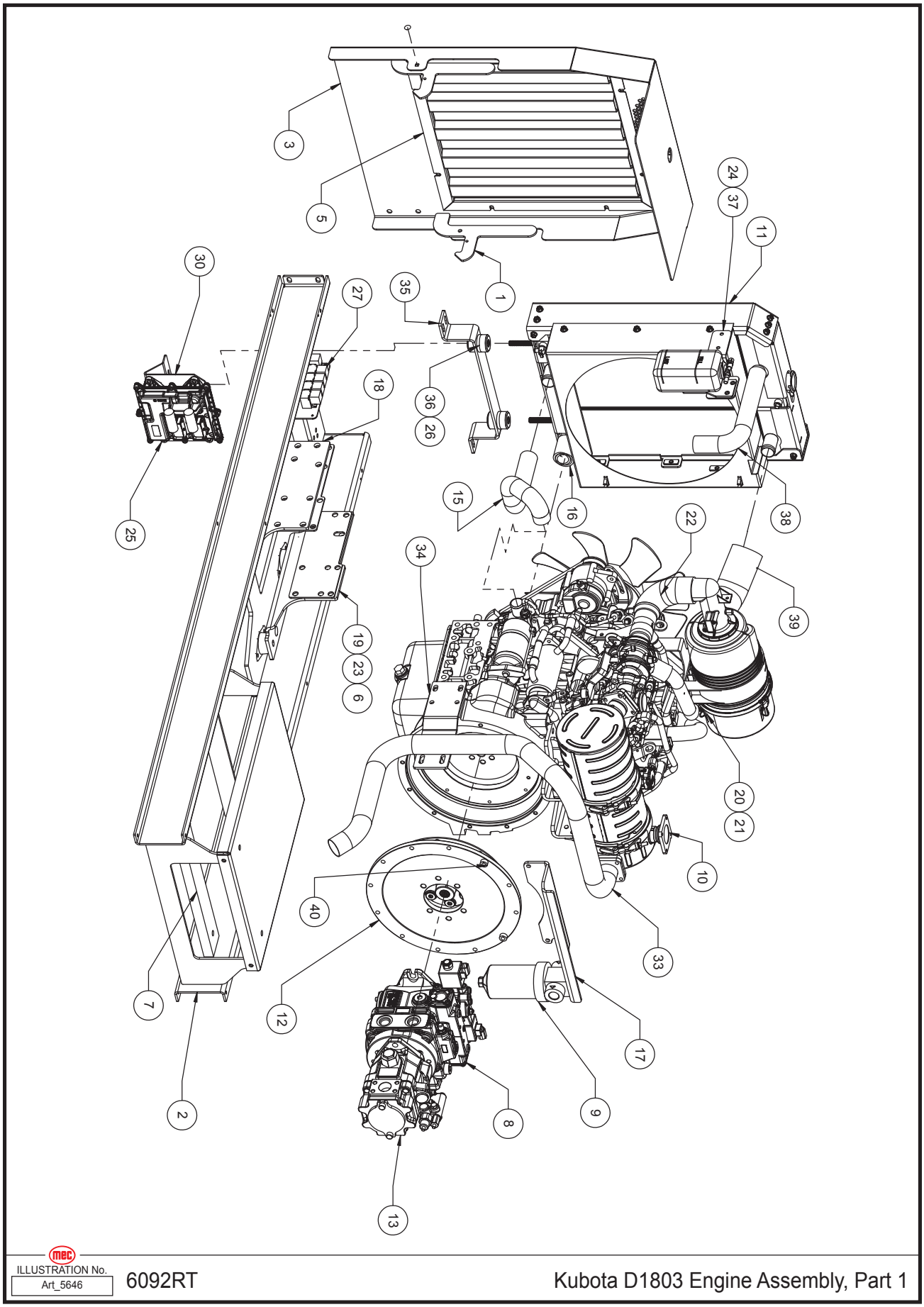

ILLUSTRATION No. Art_5646 6092RT Kubota D1803 Engine Assembly, Part 1

Item	Part Number	Description	Qty.
1	17108	Engine Release	2
2	18521	Engine Tray Weldment	1
3	18518	Radiator Support	1
5	17680	Radiator Grill	1
6	17969	Motor Mount, Engine, 70 DR.	4
7	17844	Hose Guard	1
8	94469	33CC Closed Loop Pump SAE B Through Drive	1
9	92072	Charge Filter 72 PSI	1
10	94768	Engine Diesel Kubota D1803 Tier 4 Final	1
11	94808	Kubota D1803 Radiator/CAC	1
12	94834	Engine To Pump Drive Kit, D1803 to 94467 HydroStat	1
13	95027	28CC SAE B 13T HYD. Piston Pump	1
15	28492	Coolant Hose D1803 Lower	1
16	94904	Silicon Hose Coupler 1.500 ID	1
17	28165	Bracket, Charge Filter	1
18	18504	Engine Mount Turbo Side	1
19	18505	Engine Mount Intercooler Side	1
20	95080	Air Cleaner Assembly	1
21	95079	Air Cleaner Bracket	1
22	1J49711641	Air Cleaner Elbow	1
23	28184	Engine Foot Standoff	2
24	91127	Coolant Reserve Tank Kubota	1
25	1J45659051 ECU	ECU	1
26	94874	Isolator, 46.4 mm, 51.21 mm, 1/2-13	2
27	18507	Assy, T4F Relay & ETC Mount Plate	1
30	18509	ECU Mount	1
33	18513	Exhaust Tailpipe Weldment	1
34	18514	Exhaust Mount	1
35	18523	Radiator Mount Forming	1
36	18524	Radiator Spacer	2
37	18525	Coolant Bottle Bracket	1
38	28473	Radiator Hose Top 1.375 ID 90° Elbow	1
39	95314	Silicone Hose 3" ID 30° Elbow Black (Air Cleaner Intake)	1
40	28190	Spacer, Charge Pump Bracket	2

Kubota D1803 Engine Assembly, Part 2

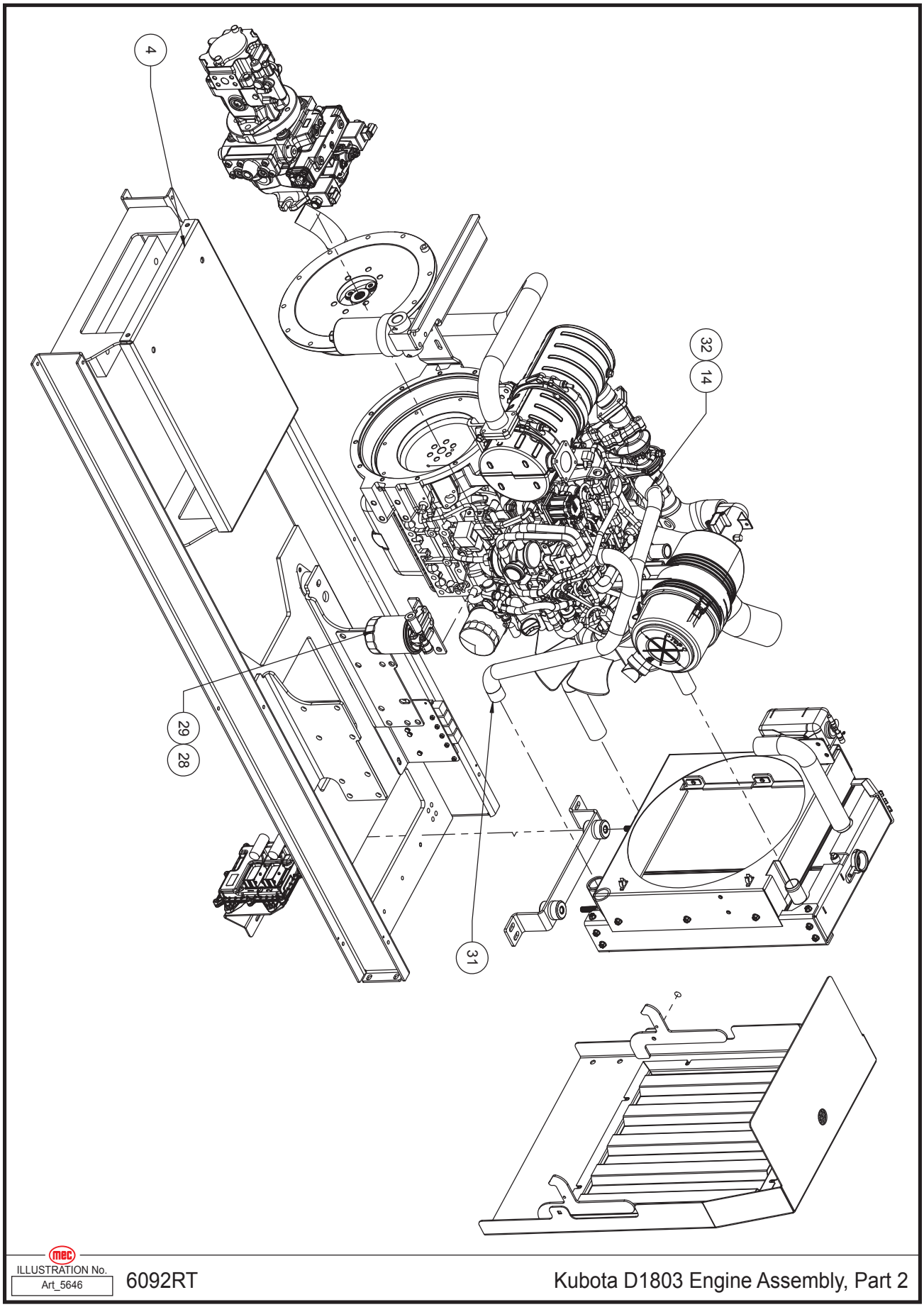

ILLUSTRATION No. Art_5646 6092RT Kubota D1803 Engine Assembly, Part 2

Item	Part Number	Description	Qty.
4	17352	Bracket	1
14	94903	Silicon Hose Coupler 1.375 ID	2
28	18508	Fuel Filter Mount	1
29	95081	Fuel Filter	1
31	18510	Intercooler Inlet Hose	1
32	18511	Intercooler Outlet Hose	1

Outrigger Assembly

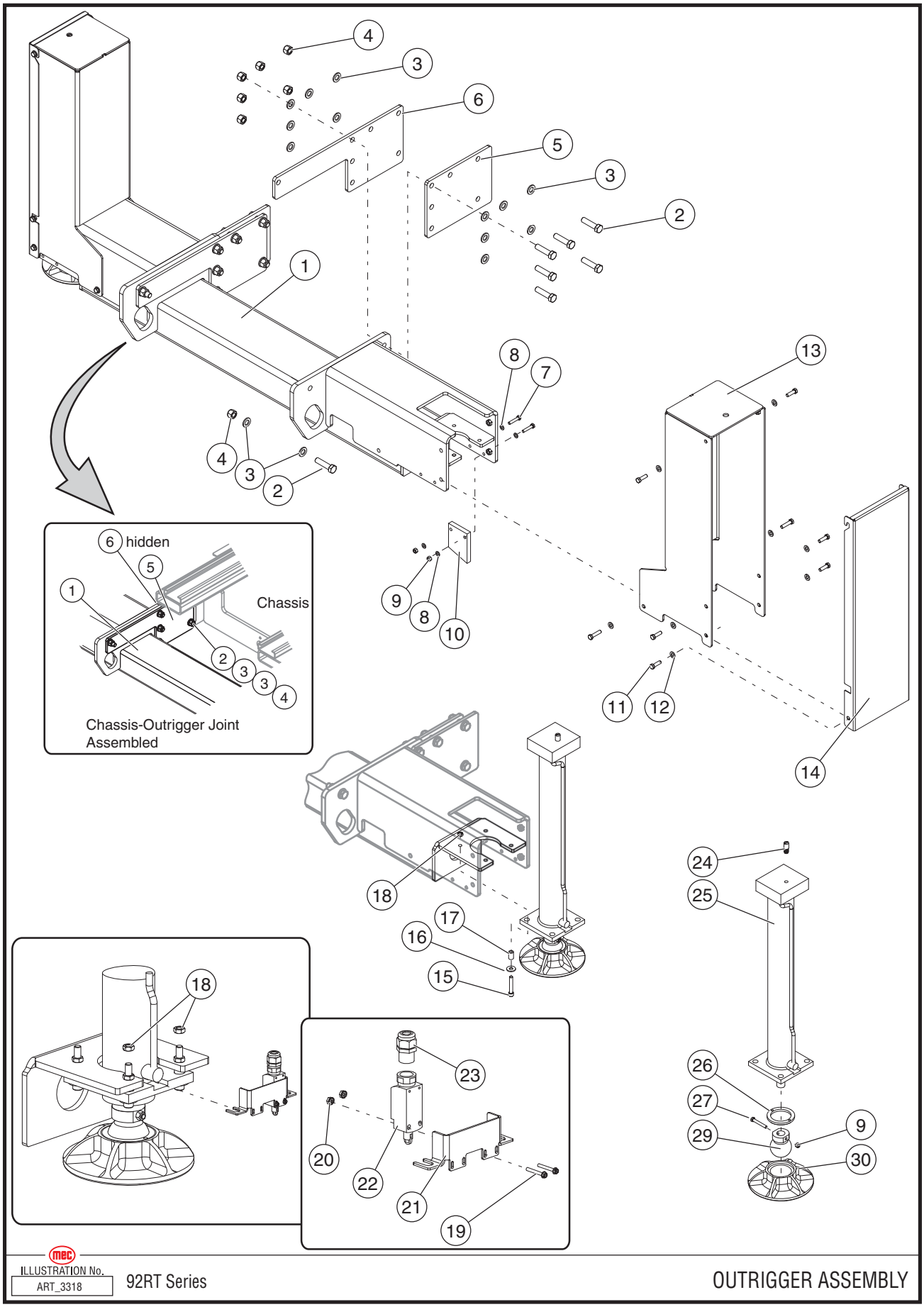

Item	Part Number	Description	Qty. Per Assembly	Qty. Per Machine
Items #1 through #6 used only on early machines. On later machines the Outrigger Weldment is part of the Chassis Weldment.				
1	17109	Outrigger Main Weldment	1	2
2	50026	Bolt, M20-2.5 x 80	12	24
3	50005	Washer, Narrow Flat, M20	24	48
4	50052	Nut, Nylock M20	12	24
5	17450	Plate, Outer Outrigger Mount	2	4
6	17451	Plate, Inner Outrigger Mount	2	4
7	50020	Bolt, HHCS M10-1.50 x 50	4	8
8	50002	Washer, M10 Narrow	8	16
9	50053	Nut, M10 Nylock	6	12
10	17721	Foot Guide, Outrigger	2	4
11	50236	Bolt, HHCS M12-1.75 x 40	16	32
12	50003	Washer, M12 Std	16	32
13	17308	Outrigger Cover Weldment	2	4
14	17306	Outrigger Cover	2	4
15	50208	Bolt, SHCS 1/2-13 x 3	8	16
16	50207	Washer, 1/2 type A	8	16
17	17623	Spacer	8	16
18	50202	Nut, 1/2-13 Jam	12	24
19	50307	Bolt, HHWS #8-32 x 1.25	4	8
20	50285	Nut, 8-32 Star Lock	4	8
21	17640	Mounting Bracket, Limit Switch (To Serial #12900142)	2	4
	29306	Mounting Bracket, Limit Switch (From Serial #12900143)	1	4
22	90531	Limit Switch, 2-Pole (To Serial #12900142)	2	4
	96384	Limit Switch (From Serial #12900143)	1	4
23	7494	Cord Connector, Liquid Tight	2	4
24	17625	Indicator, Outrigger Engaged	2	4
25	REF	Outrigger Cylinder -- See Section 19 - Hydraulics	2	4
26	--	--	--	--
27	50022	Bolt, HHCS M10-1.50 x 70	2	4
28	--	--	--	--
29	--	--	--	--
30	96229	Outrigger Foot Assembly	--	--

REF - Reference

Wiring Harness & Electrical Components

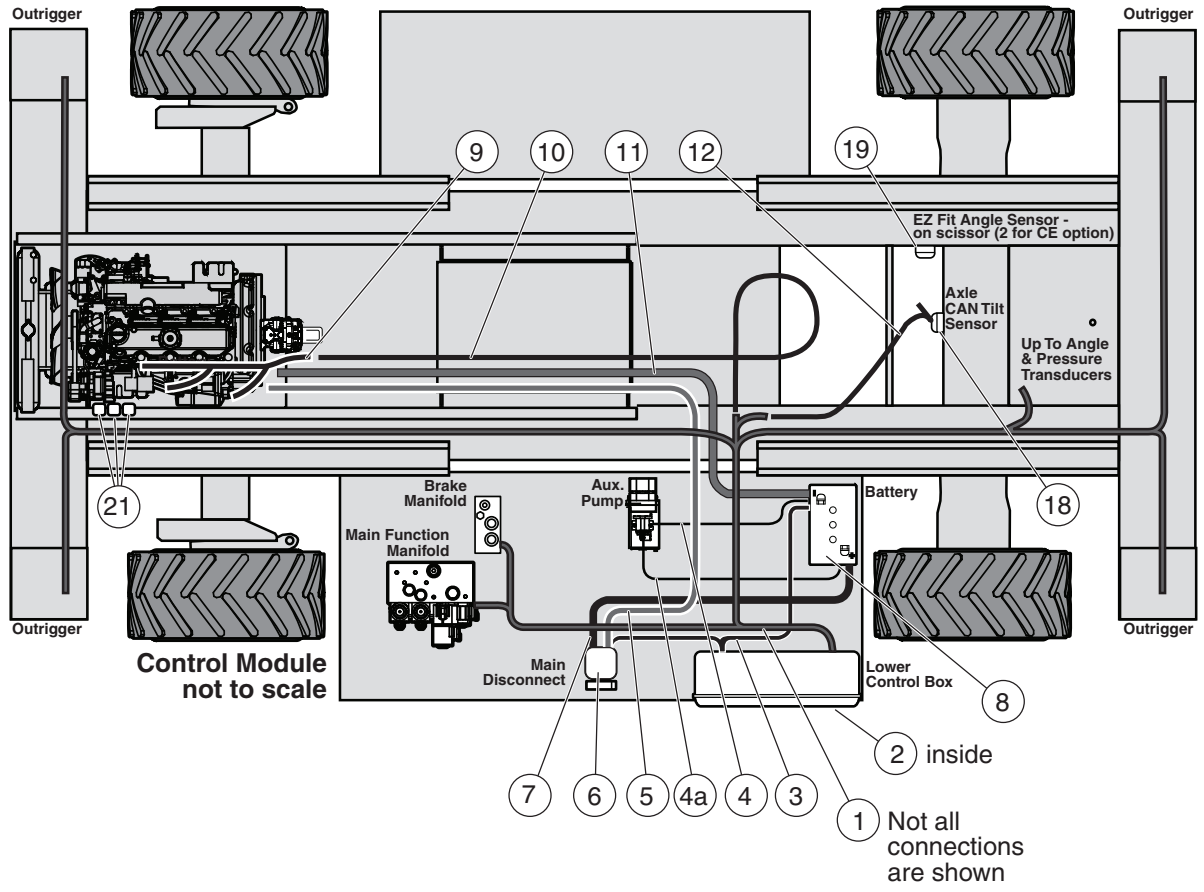

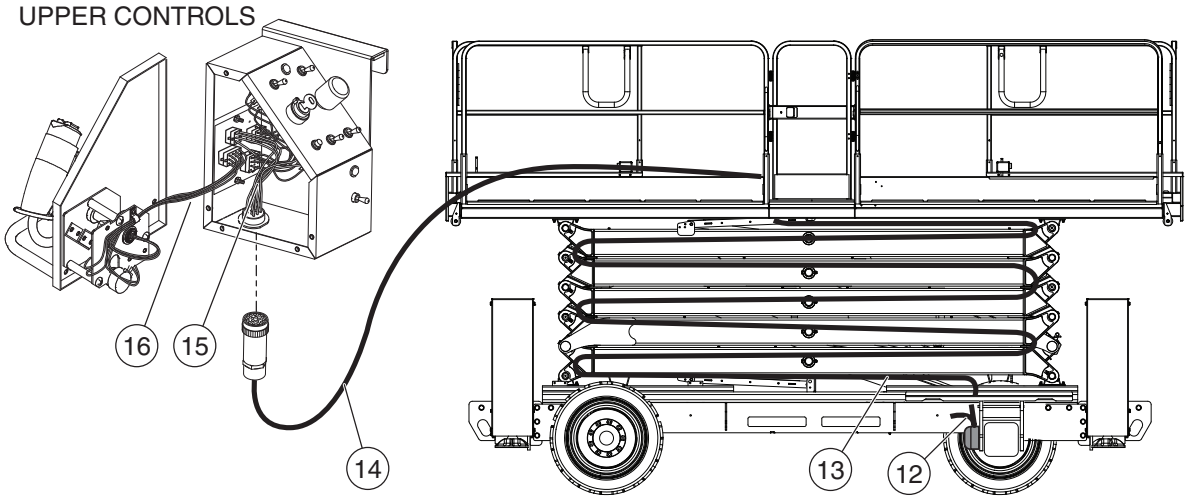

ILLUSTRATION No. ART_3547 92RT Series Wire Harnesses

Item	Part Number	Description	Qty.
1	92429	Harness, Lower Control Box to Manifolds, Outriggers & Angle Transducers	1
2	92428	Harness, Lower Control Box Interior	1
3	92142	Cable, Lower Control Box to Master Disconnect, Battery-	1
4	92459	Cable, Battery- to Auxiliary Power Unit B-	1
4a	92457	Cable, Battery+ to Auxiliary Power Unit B+	1
5	92456	Cable, Master Disconnect to Engine Starter	1
6	8841	Switch, Main Battery Disconnect	1
7	92455	Cable, Battery+ to Master Disconnect	1
8	17966	Battery, Group 31, 950 cca	1
9	92433	**5492RT** -- Harness, Engine Harness	1
	17569	**6092RT, 3392RT** -- Harness, Engine Harness	1
10	92432	Harness, Main Harness to Engine, Extension	1
11	92458	Cable, Battery- to Engine	1
12	92431	Harness, Communication, Axle CAN-Tilt Adapter	1
13	92430	**5492RT** -- Harness, Communication, Axle CAN-Tilt to Platform Bottom	1
	17427	**6092RT** -- Harness, Communication, Axle CAN-Tilt to Platform Bottom	1
	17428	**3392RT** -- Harness, Communication, Axle CAN-Tilt to Platform Bottom	1
14	91780	Harness, Communication, Platform Bottom to Upper Control Box -- Removable Control Box	1
15	92157	Harness, Inside Upper Control Box Base -- Removable Control Box	1
16	92193	Harness, Matrix Module to Joystick	1
17	92933	Cable, Power to Platform -- Not Shown; connects outlet plug on module base to outlet plug at platform	79 ft
18	92010	**5492RT ~SERIAL #11900038** -- CAN Tilt Angle Transducer (152)	1
	92202	**5492RT SERIAL #11900039~, All 3392RT, All 6092RT** -- CAN Tilt Angle Transducer (162)	1
19	90845	Pressure Sensor -- Not Shown; CE Option only; connects lower lift cylinder to Item #1	1
20	90844	**Standard** -- EZFit Angle Sensor (120)	1
		Option Load Sensing System-- EZFit Angle Sensor (120)	2
21	91375	Relay, Engine	3
--	18663	Down Valve Harness - Lower	28”
--	18664	Down Valve Harness - Upper	36”
--	18389	Dual Beacon Adapter Harness	

Scissor Guard Assembly -- Option, Early 5492RT Models

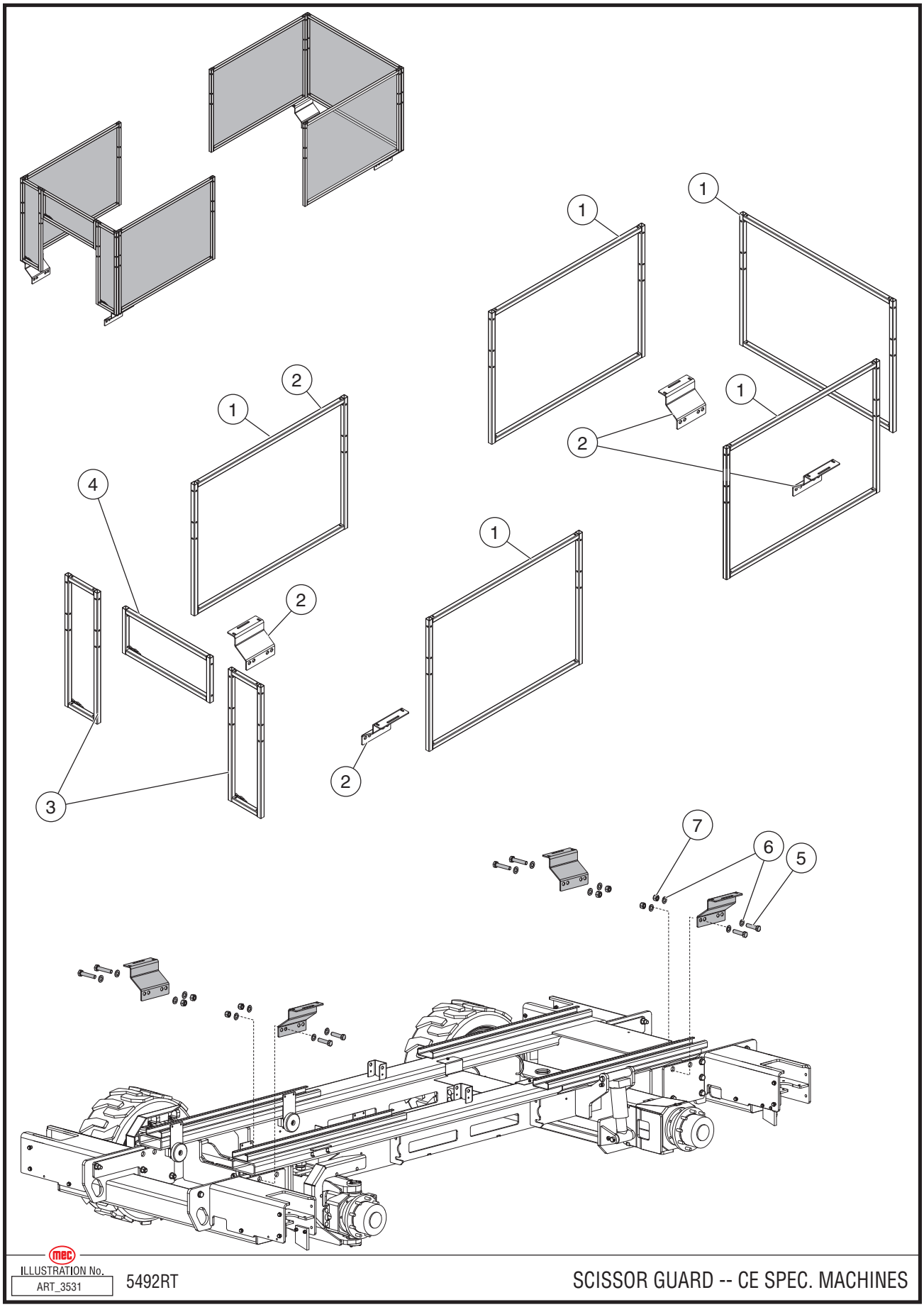

ILLUSTRATION No. ART_3531 5492RT SCISSOR GUARD -- CE SPEC. MACHINES

Item	Part Number	Description	Qty.
1	17499	Main Panel, Scissor Guard	5
2	17608	Bracket, Scissor Guard	4
3	17600	End Panel, Scissor Guard	2
4	17609	Top Panel, Scissor Guard	1
5	REF	Bolt, M20 x 2.5 x 80 -- (see “Outrigger Assembly,” on page 309)	8
6	REF	Washer, Narrow Flat, M20 -- (see “Outrigger Assembly,” on page 309)	16
7	REF	Nut, Nylock M20 -- (see “Outrigger Assembly,” on page 309)	8

REF - Reference

Generator Option, RT

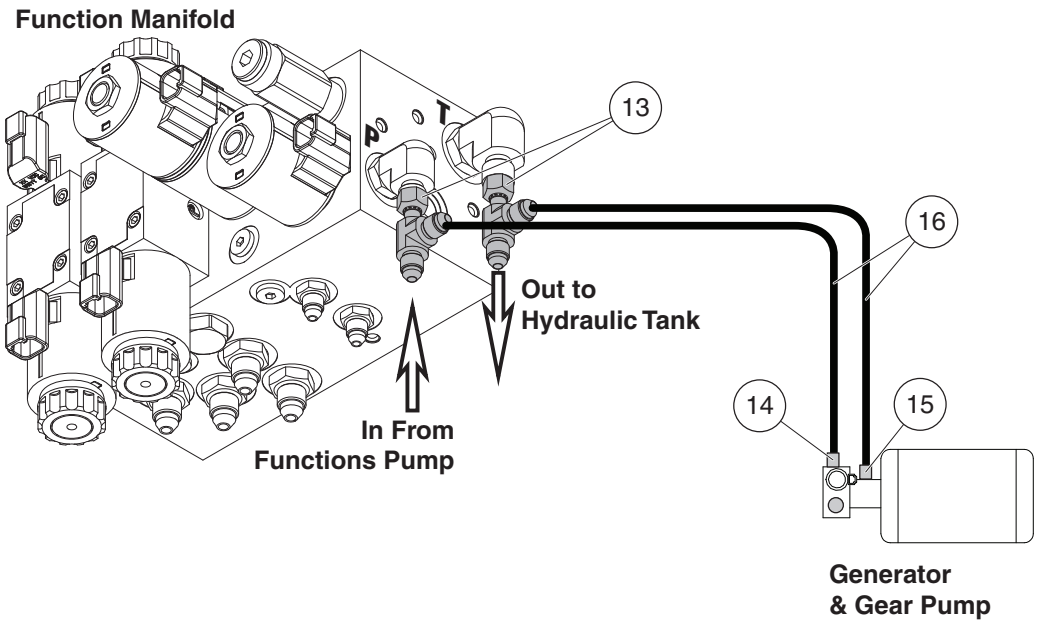

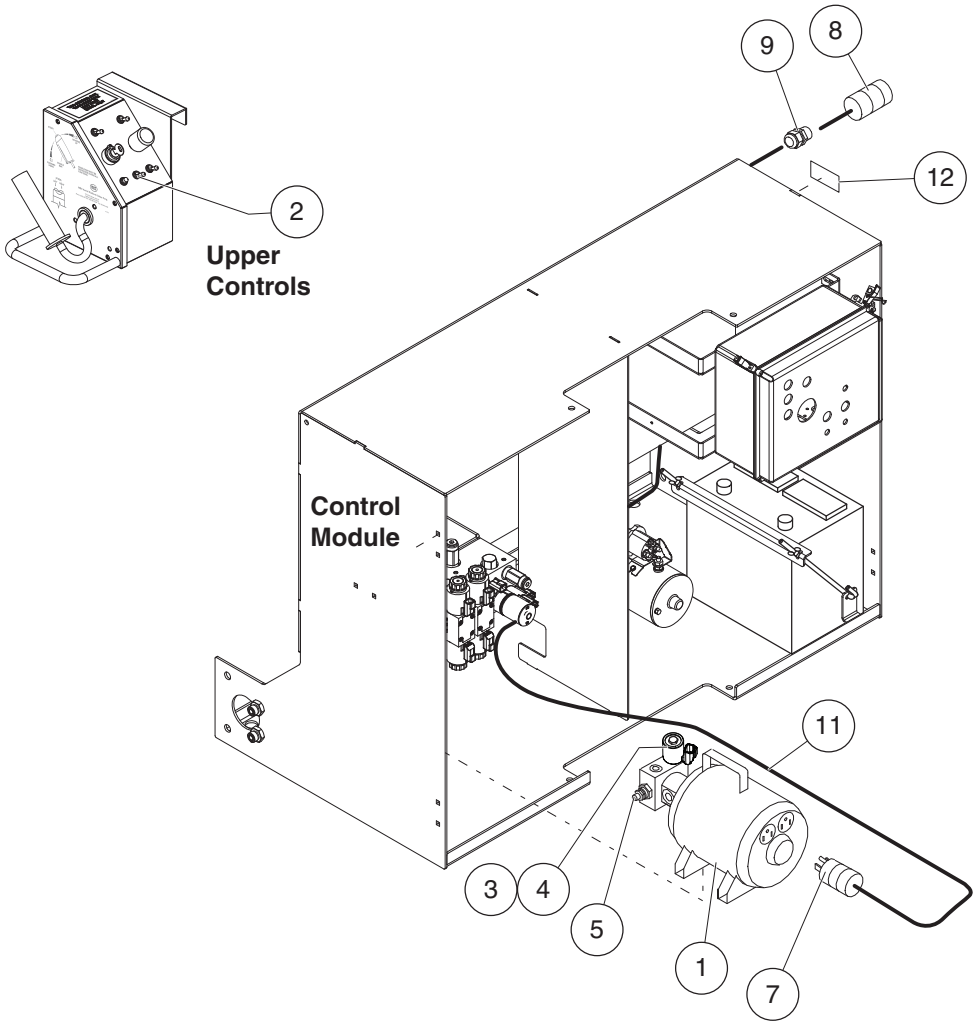

ILLUSTRATION No. ART_3600 5492RT GENERATOR OPTION

Item	Part Number	Description	Qty.
Refer to Section 19 - Hydraulics for Hose Kit			
1	91550	Generator, 2000 Watt	1
2	5630	Switch, Toggle	1
3	91551	Valve, Solenoid, 2-way, n.c. -- included with item #1	--
4	91002	Coil, 12V 10 Series -- included with item #1	--
5	91546	Needle Valve -- included with item #1	--
6	--	--	--
7	91544	Plug, Male, 3 Prong	1
8	91545	Receptacle, Female	2
9	7594	Strain Relief	1
10	--	--	--
11	7617	Wire, 14GA, 3 conductor	6 ft
12	91556	Label, AC Generator	1
13	50894	Fitting, MJ-FJX-MJT-8	2
14	50792	MB-MJ90-8-8	1
15	50781	B-MJ90-10-8	1
16	91259	Hose Assy, 1/2” x 84”, 8FJX -8FJX45	2
17	92196	Harness, Engine Intermediate, Generator Option (not shown)	1

Decals, 5492RT, 6092RT -- ANSI Specification

1 8606

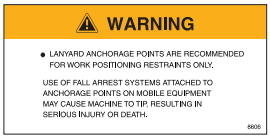

2 8605 -- 6 places



3 90733



4 90718 inside document case



5 91456

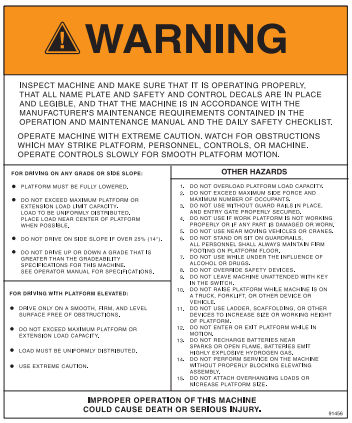

6 5492RT -- 91851 (3 places)

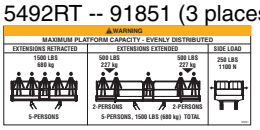

6092RT -- 93460 (3 places)

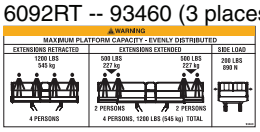

7 90721

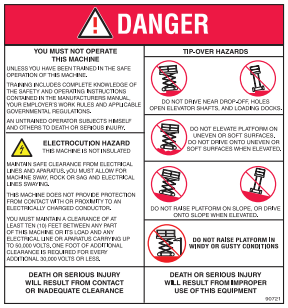

8 90730



9 90717 (2 places)

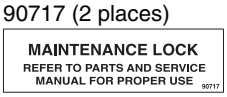

10 9910 (4 places)



11 91930

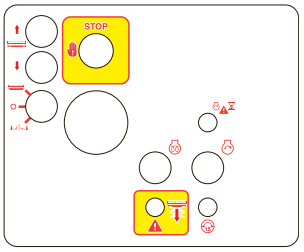

12 5492RT -- 91848

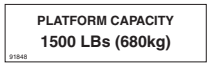

6092RT -- 93561

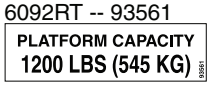

13 90732



14 91856

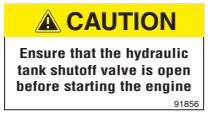

15 6873



16 91975



17 8502 (4 places -- front and rear of each module)



18 8519 (4 places -- front and rear of each module)



19 91553

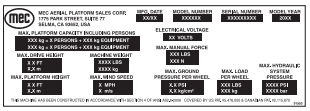

20 90729

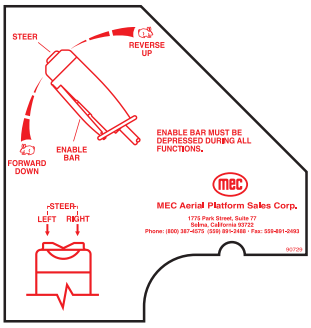

21 93572 (2 places)

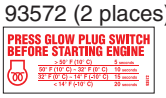

22 91873

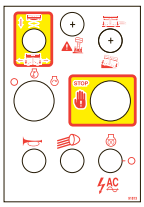

23 91844

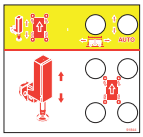

24 9465 each outrigger



25 5492RT -- 91992 (2 places)

mec 5492RT

6092RT -- 93550 (2 places)

mec 6092RT

26 5492RT -- 91876 (2 places)

mec 5492RT turbo

6092RT -- 93549 (2 places)

mec 6092RT turbo

27 92416 (2 places)

www.mecawp.com

28 90719 (4 places)



29 91973 (4 places)



30 7156



31 90739 (2 places)



ILLUSTRATION No. ART_3023r1

NOTE: Decals may vary in accordance with locale requirements.

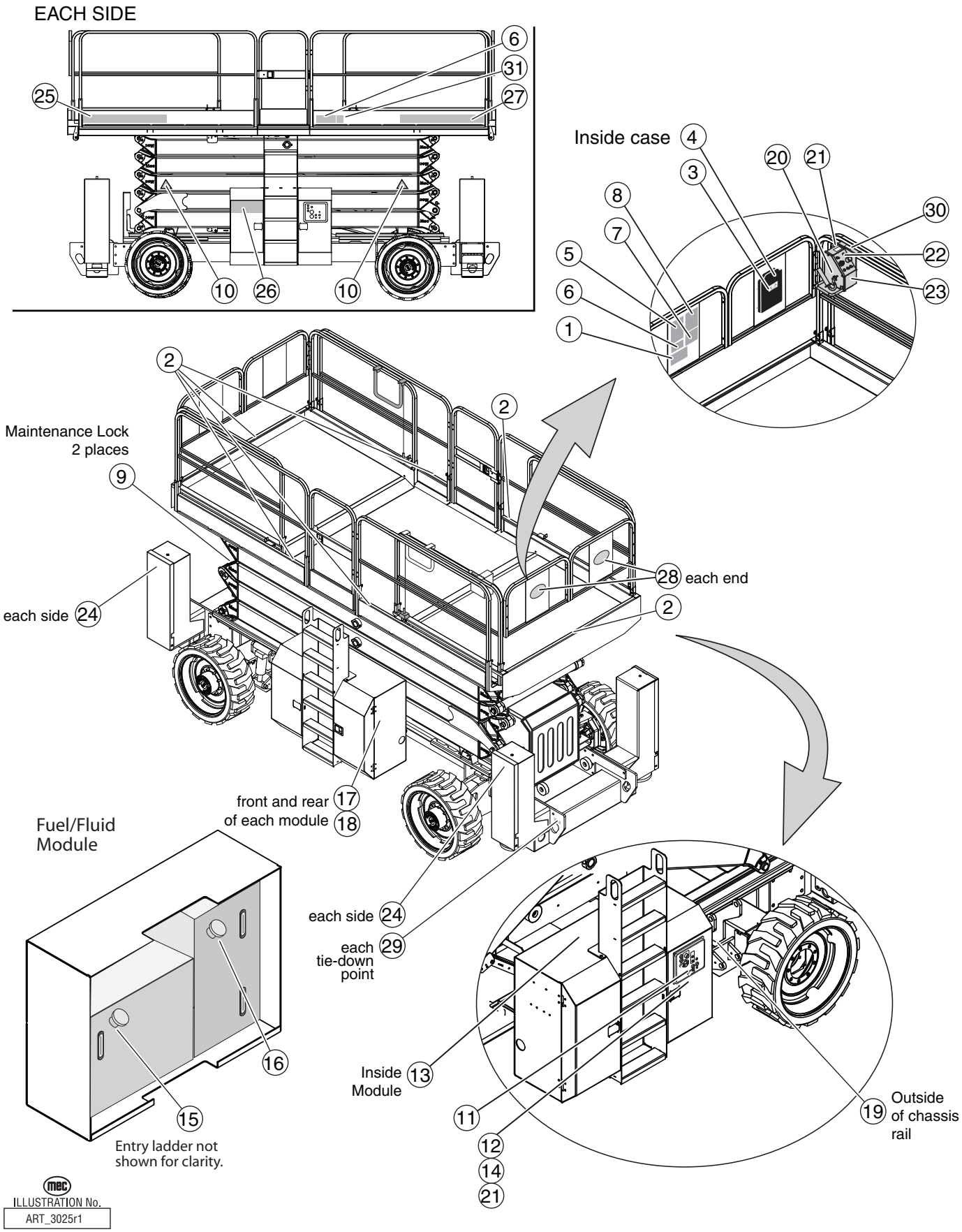
EACH SIDE
6
31
27
25
10
26
10
Inside case
4
3
20
21
8
7
30
5
22
6
23
1
2
2
Maintenance Lock
2 places
9
28 each end
each side 24
2
front and rear 17
of each module 18
Fuel/Fluid
Module
each side 24
each 29
tie-down
point
16
Inside 13
Module
11
12
14
21
19 Outside
of chassis
rail
15
Entry ladder not
shown for clarity.
ILLUSTRATION No.
ART_3025r1

Item	Part Number	Description	Qty.
1	8606	Warning, Lanyard (option)	1
2	8605	Decal, Anchorage Point (option)	6
3	90733	Decal, Manuals Inside	1
4	90718	Warning, Inspection Report	1
5	91456	Decal, Warning Panel	1
6	91851	5492RT -- Decal, Platform Capacity, 5492RT	3
	93460	6092RT -- Decal, Platform Capacity, 6092RT	3
7	90721	Decal, Danger Panel	1
8	90730	Decal, Warning, Sheet Loading	1
9	90717	Decal, Maintenance Lock	2
10	9910	Decal, Crush Hazard	4
11	91930	Decal, Lower Controls	1
12	91848	**5492RT** -- Decal, Capacity 1500 lbs Small	1
	93561	**6092RT** -- Decal, Capacity 1200 lbs Small	1
13	90732	Decal, Warning, Pressure Wash	1
14	91856	Decal, Caution Hyd Tank Valve	2
15	6873	Decal, Hydraulic Oil	1
16	91975	Decal, Diesel	1
17	8502	Decal, Tire Inflation (not used with Foam-Filled Tire option)	4
18	8519	Decal, Warning, Tire Replacement	4
19	91553	Serial Plate	1
20	90729	Decal, Upper Control Box, Side	1
21	93572	Decal, Glow Plug	2
22	91873	Decal, Upper Controls	1
23	91844	Decal, Outrigger Operation	1
24	9465	Decal, Danger, Crush Hazard	4
25	91992	**5492RT** -- Decal, MEC 5492RT Toeboard	2
	93550	**6092RT** -- Decal, MEC 6092RT Toeboard	2
26	91876	**5492RT** -- Decal, MEC 5492RT Turbo Module Door	2
	93549	**6092RT** -- Decal, MEC 6092RT Turbo Module Door	2
27	92416	Decal, Website	2
28	90719	Decal, MEC Oval	4
29	91973	Tie Down Point	4
30	7156	Decal, Front	1
31	90739	Decal, Made in USA	1

Decals, 5492RT -- CE Specification

1 91992

mec 5492RT

2 90719

3 91876

mec 5492RT turbo

4 91877

Quad-Trax 4wd

5 8606

WARNING

- LANYARD ANCHORAGE POINTS ARE RECOMMENDED FOR WORK POSITIONING RESTRAINTS ONLY.

USE OF FALL ARREST SYSTEMS ATTACHED TO ANCHORAGE POINTS ON MOBILE EQUIPMENT MAY CAUSE MACHINE TO TIP, RESULTING IN SERIOUS INJURY OR DEATH.

8606

6 8605

CERTIFIED LANYARD ANCHORAGE POINT

7 8911

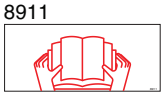

8 90718

WARNING

USE OR OPERATION OF AN UNINSPECTED WORK PLATFORM COULD CAUSE DEATH, PERSONAL INJURY

- DO NOT OPERATE THIS WORK PLATFORM IF AN INSPECTION HAS NOT BEEN PERFORMED WITHIN 13 MONTHS OF THE LAST RECORDED INSPECTION DATE.
- STAMP MONTH/DAY/YEAR NEXT TO APPROPRIATE YEAR AFTER EACH INSPECTION.

NEW, 1ST YEAR, 2ND YEAR, 3RD YEAR, 4TH YEAR, 5TH YEAR, 6TH YEAR, 7TH YEAR, 8TH YEAR, 9TH YEAR, 10TH YEAR

– NOTICE –

CHANGE OF OWNERSHIP OF THIS WORK PLATFORM MUST BE REPORTED TO MANUFACTURER:

MEC Aerial Platform Sales Corp.

90718

9 91846

WARNING

INSPECT MACHINE AND MAKE SURE THAT IT IS OPERATING PROPERLY. THAT ALL NAME PLATE AND SAFETY AND CONTROL DECALS ARE IN PLACE AND LEGIBLE, AND THAT THE MACHINE IS IN ACCORDANCE WITH THE MANUFACTURER'S MAINTENANCE REQUIREMENTS CONTAINED IN THE OPERATION AND MAINTENANCE MANUAL AND THE DAILY SAFETY CHECKLIST.

OPERATE MACHINE WITH EXTREME CAUTION. WATCH FOR OBSTRUCTIONS OVERHEAD AND ON THE GROUND. CONTROL SPEED WHILE TURNING. OPERATE CONTROLS SLOWLY FOR SMOOTH PLATFORM MOTION.

FOR DRIVING WITH PLATFORM LOWERED

- DO NOT EXCEED MAXIMUM PLATFORM OR EXTENSION LOAD LIMIT CAPACITY. LOAD TO BE UNIFORMLY DISTRIBUTED. PLACE LOAD NEAR CENTER OF PLATFORM WHEN POSSIBLE.
- DO NOT DRIVE ON SIDE SLOPE OF PLATFORM EXCEEDS ON/OFF LEVEL.
- DO NOT DRIVE UP OR DOWN A GRADE OF OVER 50%.

FOR DRIVING WITH PLATFORM ELEVATED:

- DRIVE ONLY ON A SMOOTH, FIRM, AND PLANAR SURFACE FREE OF OBSTRUCTIONS.
- DO NOT EXCEED MAXIMUM PLATFORM OR EXTENSION LOAD CAPACITY.
- LOAD MUST BE UNIFORMLY DISTRIBUTED.
- IF TILT WARNING LIGHT ILLUMINATES OR TILT ALARM SOUNDS LOWER PLATFORM AND RE-LEVEL.
- USE EXTREME CAUTION.

OTHER HAZARDS

1. DO NOT EXCEED PLATFORM LOAD CAPACITY.
2. DO NOT EXCEED MAXIMUM SIDE FORCE AND MAXIMUM NUMBER OF OCCUPANTS.
3. DO NOT ADJUST OR MOVE MACHINE IS IN PLACE, AND ENTRY GATE PROPERLY SECURED.
4. DO NOT USE AS WORK PLATFORM IS NOT SIGNING, PROPERLY GRIP ANY PART IS DAMAGED OR WORN.
5. DO NOT USE NEAR MOVING VEHICLES OR CRANES, UNLESS ALL OPERATORS HAVE BEEN NOTIFIED.
6. ALL PERSONNEL SHALL ALWAYS MAINTAIN FIRM FOOTING ON PLATFORM FLOOR.
7. DO NOT CLIMB OR STAND ON THE RAILINGS OF PLATFORM OR OTHER.
8. DO NOT OVERRIDE SAFETY DEVICES.
9. DO NOT OPERATE MACHINE UNATTENDED WITH KEY IN THE SWITCH.
10. DO NOT RAISE PLATFORM WHILE MACHINE IS ON A TRUCK, FORKLIFT OR OTHER SERVICE OR VEHICLE.
11. DO NOT USE LADDER, SCAFFOLDING, OR OTHER MEANS TO INCREASE REACH OR WORKING HEIGHT OF PLATFORM.
12. DO NOT ENTER OR EXIT PLATFORM WHILE IN ACTION.
13. DO NOT USE NEAR SPARKS OR OPEN FLAME, BATTERIES EMIT HIGHLY EXPLOSIVE HYDROGEN GAS.
14. DO NOT USE MACHINE AS A WELDING GROUND WITHOUT PROPERLY SUPPORTING ELEVATING ASSEMBLY.
15. DO NOT ATTACH OVERHANGING LOADS ON RETRACTED PLATFORM SIDE.

IMPROPER OPERATION OF THIS MACHINE COULD CAUSE DEATH OR SERIOUS INJURY.

91846

10 91867

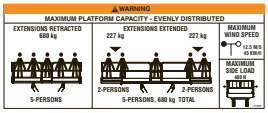

11 90721

DANGER

YOU MUST NOT OPERATE THIS MACHINE

- UNLESS YOU HAVE BEEN TRAINED IN THE SAFE OPERATION OF THIS MACHINE.
- TRAINING INCLUDES COMPLETE KNOWLEDGE OF THE SAFETY AND OPERATING INSTRUCTIONS CONTAINED IN THE OPERATOR'S MANUAL, YOUR EMPLOYER'S WORK RULES AND APPLICABLE GOVERNMENTAL REGULATIONS.
- AN EXPERIENCED OPERATOR SUBJECTS HIMSELF AND OTHERS TO DEATH OR SERIOUS INJURY.

ELECTROCUTION HAZARD

THIS MACHINE IS NOT INSULATED.

TIP-OVER HAZARDS

DO NOT DRIVE NEAR OPEN/OFF HOLES

DO NOT ELEVATE PLATFORM ON SLOPES OR RAMPS

DO NOT DRIVE ONTO LAKES OR SOFT SURFACES WHEN ELEVATED

DO NOT RAISE PLATFORM IN WINDY OR GUSTY CONDITIONS

DEATH OR SERIOUS INJURY WILL RESULT FROM CONTACT OR INADEQUATE CLEARANCE

DEATH OR SERIOUS INJURY WILL RESULT FROM IMPROPER USE OF THIS EQUIPMENT

90721

12 90730

WARNING

- PLATFORM EXTENSION MUST BE LOCKED IN PLACE AT ALL TIMES.
- SHEET LOADING GATE MUST BE IN LOWERED LOCKED POSITION BEFORE OPERATING FROM PLATFORM.
- PLATFORM ENTRANCE MUST BE PROPERLY CLOSED AND ALL GUARDRAILS PROPERLY IN PLACE AND SECURED BEFORE OPERATING FROM PLATFORM.

13 90717EUR

MAINTENANCE LOCK

ENSURE LOCK IS IN PLACE BEFORE DOING MAINTENANCE ON ELEVATED WORK PLATFORM

14 91947

MAX 6350 lbs 2880 kg

91947

15 91930

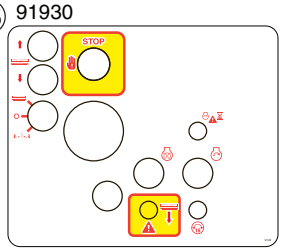

16 91848

PLATFORM CAPACITY 1500 LBs (680kg)

91848

17 90732

WARNING

DO NOT POWERWASH OR SPRAY ELECTRONIC COMPONENTS OR CONNECTORS. MOISTURE MAY CAUSE DAMAGE AND/OR ERRATIC OPERATION

90732

18 91856

CAUTION

Ensure that the hydraulic tank shutoff valve is open before starting the engine

91856

19 6873

HYDRAULIC OIL

20 9378

DIESEL ONLY

9378

21 90739

MADE IN USA

MEC AERIAL PLATFORM SALES CORP.

22 90725

WARNING

- REPLACE TIRES WITH MANUFACTURER'S EQUIPMENT ONLY.
- FAILURE TO USE MANUFACTURER'S TIRES MAY CAUSE MACHINE INSTABILITY.
- REFER TO MAINTENANCE MANUAL FOR REPLACEMENT PART NUMBER.

90725

23 91553

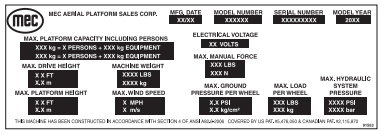

24 90729

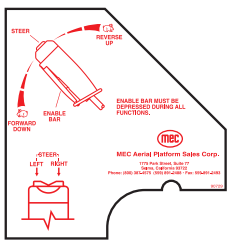

25 11026730

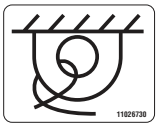

26 91875

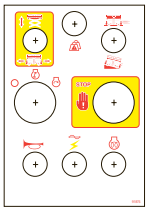

27 91933

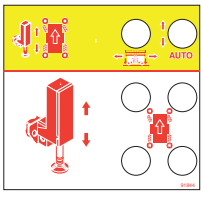

28 9465

DANGER

STAND CLEAR

OUTRIGGER CONTACT WILL CAUSE SERIOUS CRUSHING INJURY

9465

29 7156

FRONT

7156

30 91388

L WA 86 dB

31 7982

32 91325 AUSTRALIA ONLY

DANGER

THIS MACHINE IS NOT INSULATED!!! DEATH OR SERIOUS INJURY will result from contact with or inadequate clearance from any electrically charged conductor.

MINIMUM CLEARANCES FROM POWER LINES

CLEARANCES FOR OPERATING ELEVATING WORK PLATFORMS NEAR POWER LINES WHILE IN OPERATING MODE

OVERHEAD POWER LINES ON POLES

NO GO ZONE

OVERHEAD POWER LINES ON TOWERS

NO GO ZONE

91325

ILLUSTRATION No. ART_3408

5492RT

DECALS, CE SPEC.

Decal Placement, 5492RT -- CE Specification

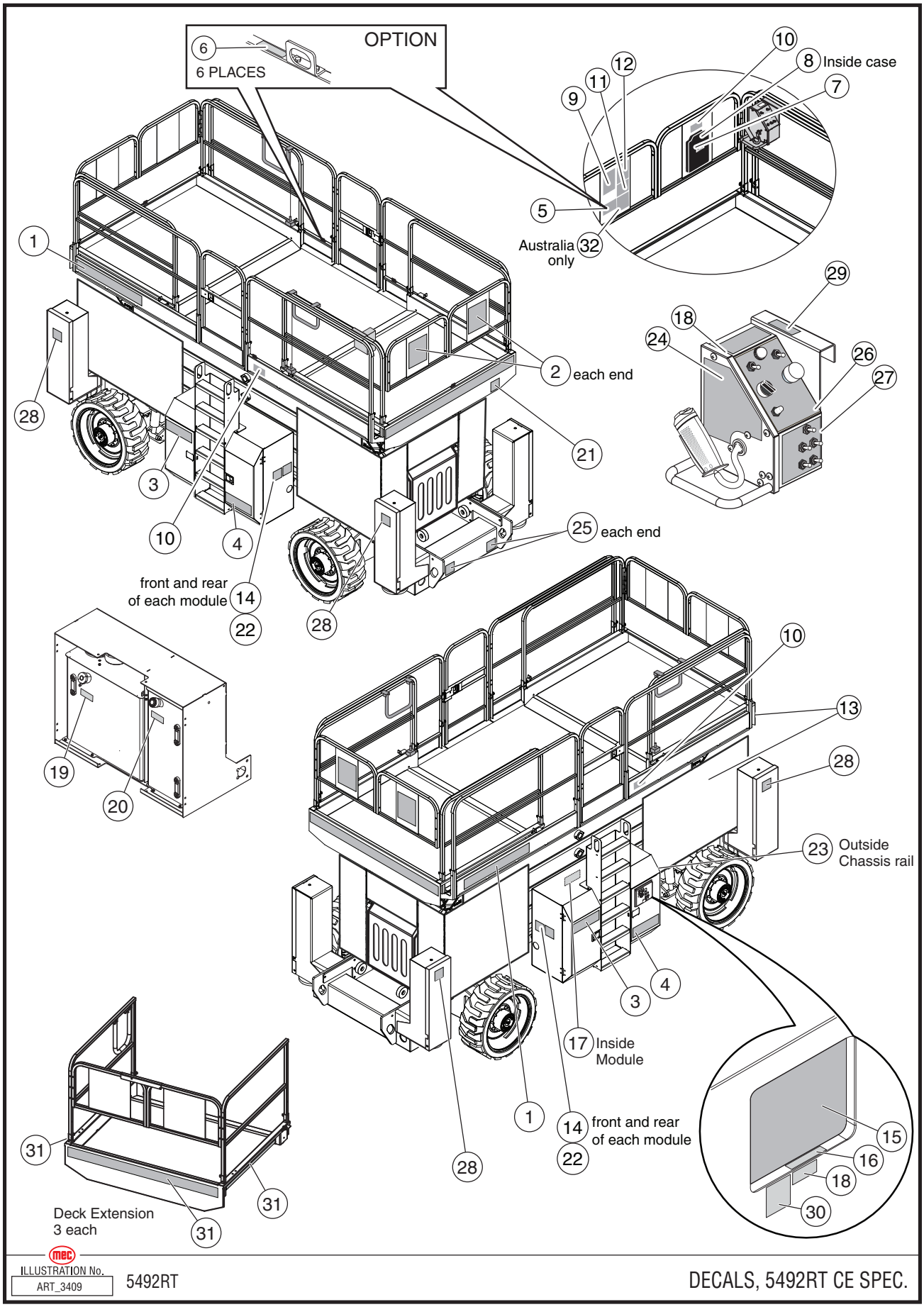

Decals, 6092RT -- CE Specification

1 8606

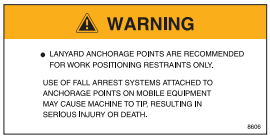

2 8605 -- 6 Places



3 8911

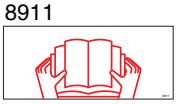

4 not used

5 91456

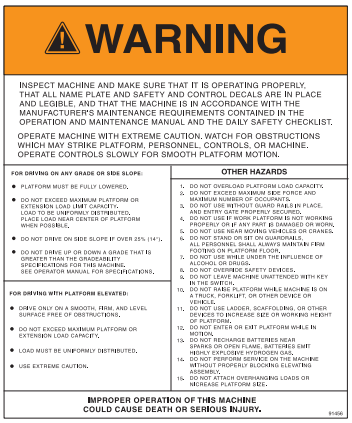

6 93671 -- 3 places

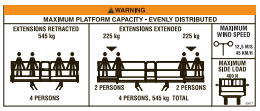

7 90721

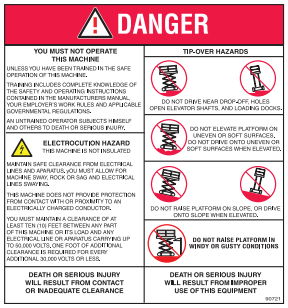

8 90730



9 90717 -- 2 Places



10 9910 -- 4 Places



11 91930

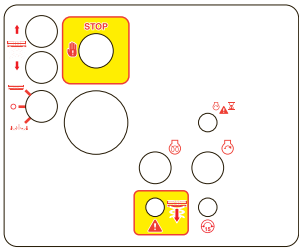

12 93561

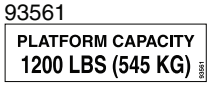

13 90732



14 91856

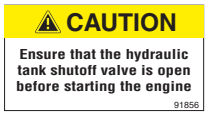

15 6873



16 91975



17 91388 -- 2 places

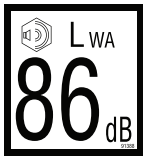

18 8519 4 places -- front and rear of each module



19 CE -- 91775
Aus/NZ -- 93752

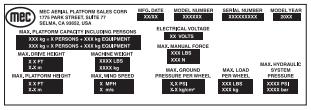

20 90729

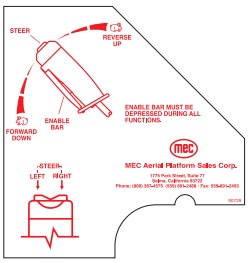

21 90739 -- 2 places



22 91875

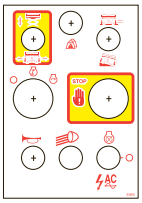

23 91844

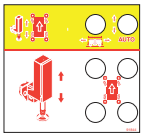

24 9465
each outrigger



25 93550 -- 2 places
mec 6092RT

26 93549 -- 2 places
mec 6092RT turbo

27 92416 -- 2 places
www.mecawp.com

28 7155



29 7156



30 91973 -- 4 places



31 7982 -- 6 Places

32 93672 -- 4 Places

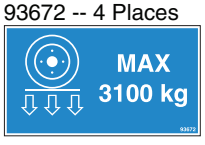

33 93673



34 91325 -- AUS/NZ only

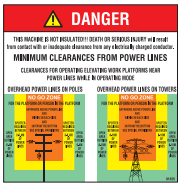

35 93565

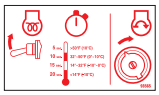

36 93564

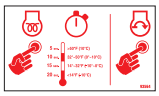

ILLUSTRATION No.
ART_4749

NOTE: Decals may vary in accordance with local requirements.

Decal Placement, 6092RT -- CE Specification

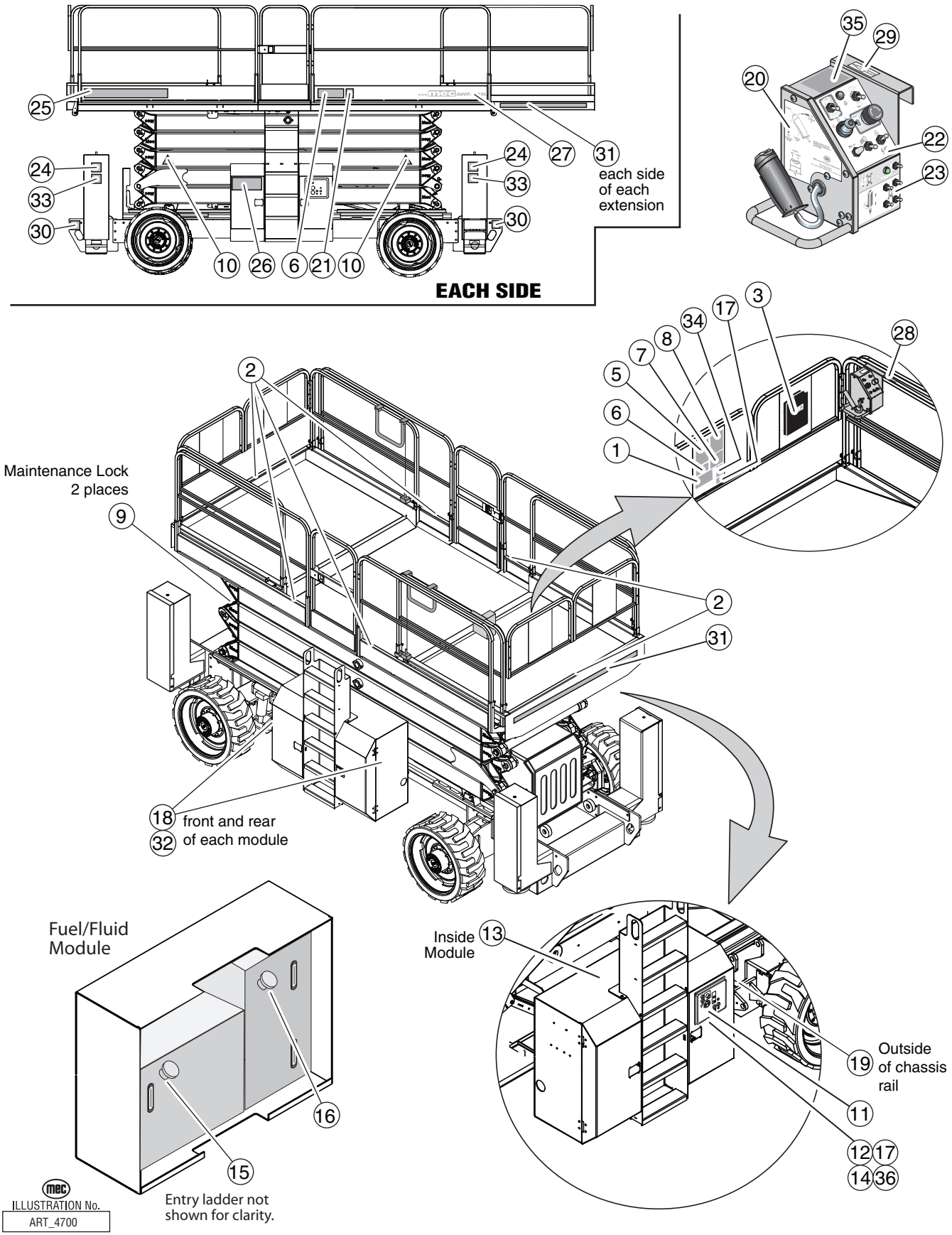

Decals, 3392RT -- CE Specification

1 8606

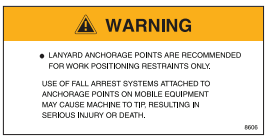

2 8605 -- 6 Places



3 8911



4 not used

5 91456

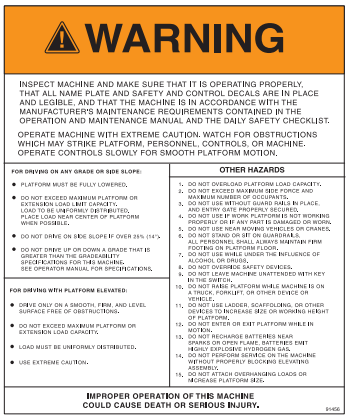

6 93675NOR -- 3 places

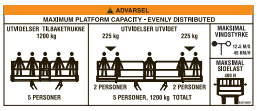

7 90721

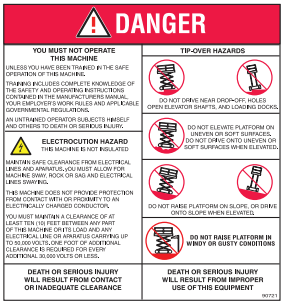

8 90730



9 90717 -- 2 Places



10 9910 -- 4 Places



11 91930

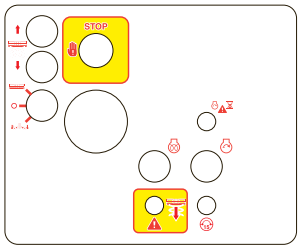

12 93678



13 90732



14 91856

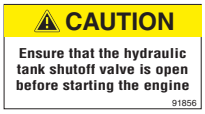

15 6873



16 91975



17 91388 -- 2 places



18 8519 4 places -- front and rear of each module



19 CE -- 91775
Aus/NZ -- 93752

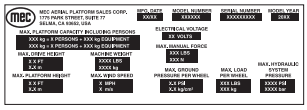

20 90729

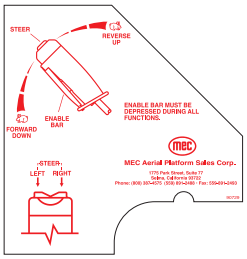

21 90739 -- 2 places



22 91875

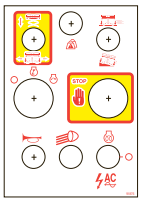

23 91844

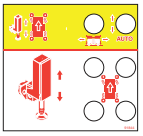

24 9465
each outrigger



25 2 places
93683 white
93684 dark gray
mec 3392RT-T

26 2 places
93681 white
93682 dark gray
mec 3392RT-T TURBO

27 2 places
92416 white
92547 dark gray
www.mecawp.com

28 7155



29 7156



30 91973 -- 4 places



31 7982 -- 6 Places

32 93676 -- 4 Places

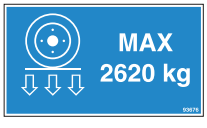

33 93677



34 91325 -- AUS/NZ only

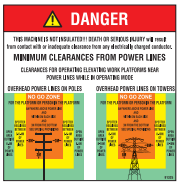

35 93565

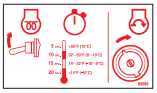

36 93564

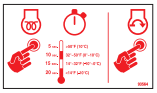

ILLUSTRATION No.
ART_4784

NOTE: Decals may vary in accordance with local requirements.

Decal Placement, 3392RT -- CE Specification

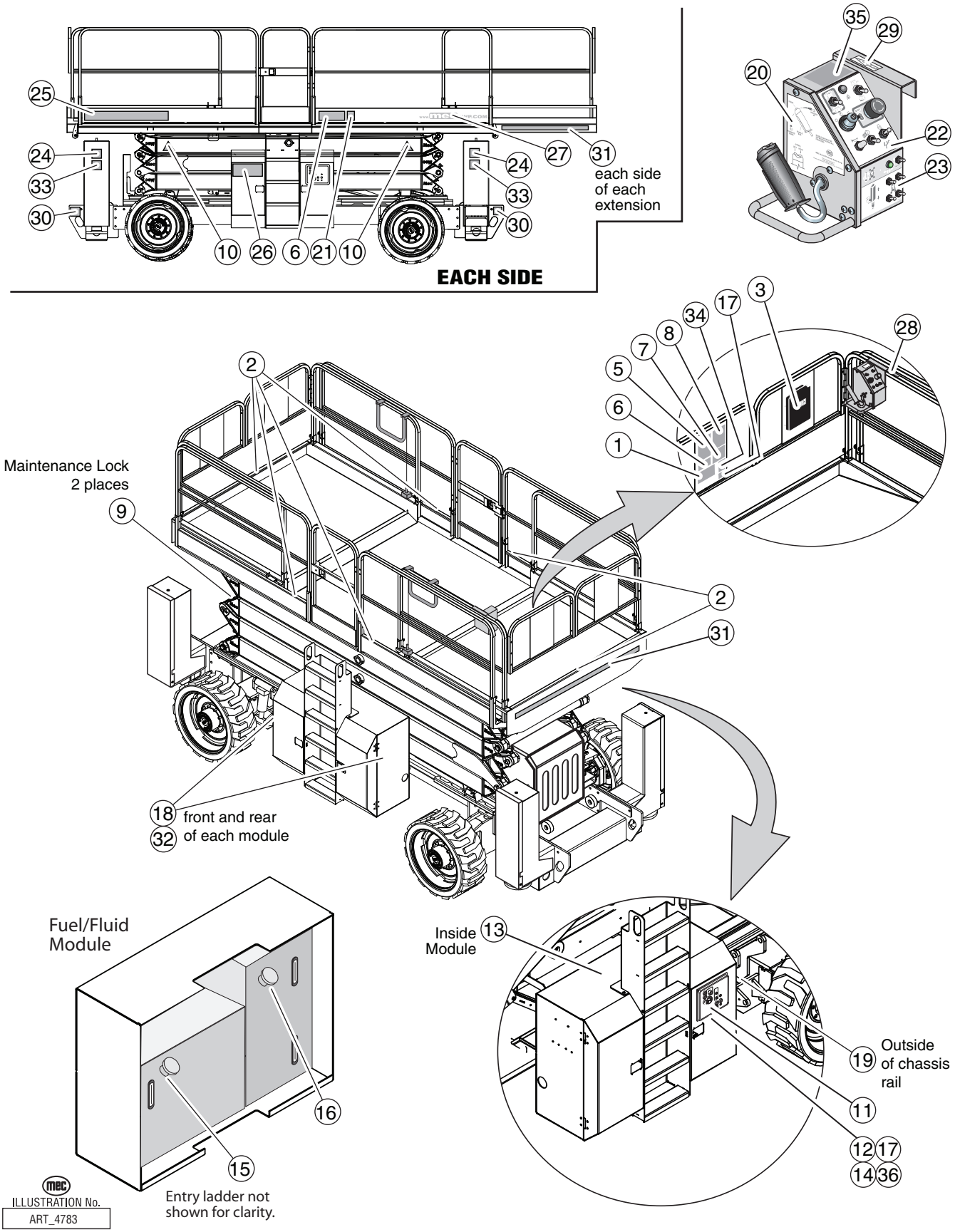

Notes

MEC Parts Order Form

Phone: 559-842-1523
Fax: 559-400-6723
Email: Parts@mecawp.com

Please fill out completely

Date: _____

Account: _____

Bill to: _____

_____

_____

_____

Ordered By: _____

Your Fax No.: _____

Ship to: _____

_____

_____

_____

Purchase Order Number _____
** All orders MUST have a Purchase Order Number

Ship VIA _____
**Fed Ex shipments require Fed Ex account number

Part Number	Description	Quantity	Price

All back-ordered parts will be shipped when available via the same ship method as original order unless noted below:

___ Ship complete order only - No Backorders
___ Ship all available parts and contact customer on disposition of back-ordered parts
___ Other (Please specify)

_____

Limited Owner Warranty

MEC Aerial Platform Sales Corp. warrants its equipment to the original purchaser against defects in material and/or workmanship under normal use and service for one (1) year from date of registered sale or date the unit left the factory if not registered. MEC Aerial Platform Sales Corp. further warrants the structural weldments of the main frame and scissor arms to be free from defects in material or workmanship for five (5) years from date of registered sale or date unit left the factory if not registered. Excluded from such warranty is the battery(s) which carries a ninety (90) day warranty from described purchase date. Warranty claims within such warranty period shall be limited to repair or replacement, MEC Aerial Platform Sales Corp's option, of the defective part in question and labor to perform the necessary repair or replacement based on MEC Aerial Platform Sales Corp's then current flat rate, provided the defective part in question is shipped prepaid to MEC Aerial Platform Sales Corp. and is found upon inspection by MEC Aerial Platform Sales Corp. to be defective in material and/or workmanship. MEC Aerial Platform Sales Corp. shall not be liable for any consequential, incidental or contingent damages whatsoever. Use of other than factory authorized parts; misuse, improper maintenance, or modification of the equipment voids this warranty. The foregoing warranty is exclusive and in lieu of all other warranties, express or implied. All such other warranties, including implied warranties of merchantability and of fitness for a particular purpose, are hereby excluded. No Dealer, Sales Representative, or other person purporting to act on behalf of MEC Aerial Platform Sales Corp. is authorized to alter the terms of this warranty, or in any manner assume on behalf of MEC Aerial Platform Sales Corp. any liability or obligation which exceeds MEC Aerial Platform Sales Corp's obligations under this warranty.

MEC Aerial Work Platforms

1401 S. Madera Avenue, Kerman, CA 93630 USA
Toll Free: 1 - 877 - 632 - 5438
Phone: 1 - 559 - 842 - 1500
Fax: 1 - 559 - 842 - 1520
info@MECawp.com
www.MECawp.com