Service & Parts Manual

34-J Diesel

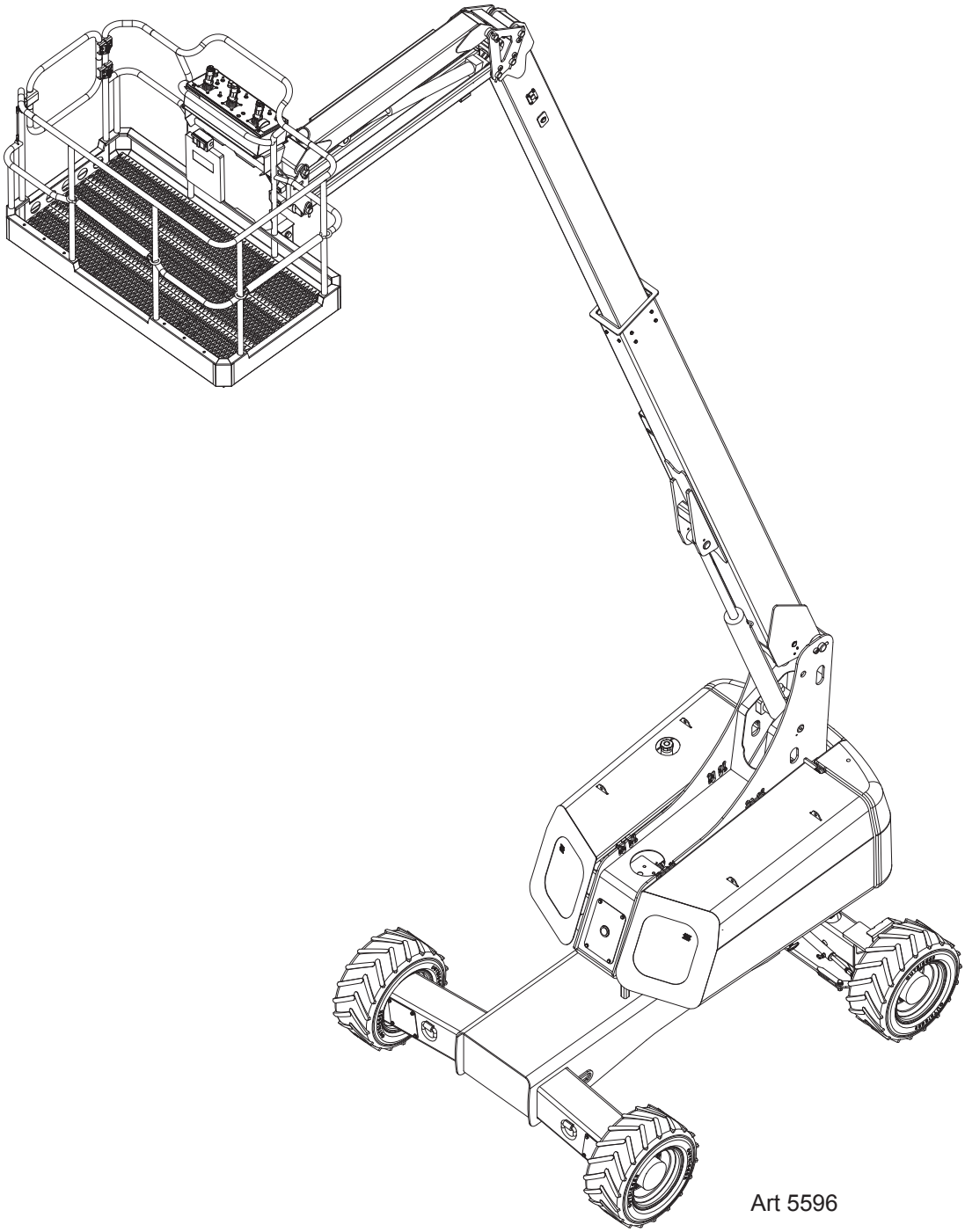

Art 5596

Serial Number Range
14100000 - Up

Part # 95325
November 2026

Revision History

Date	Reason for Update
May 2021	New Release
September 2024	Added 95797 with hardware 53013 and 50007
November 2024	Updated description of 91116 and 91123 on page 224. Added 96387 and 96388 on page 224.
July 2025	Added 7553 to page 128.
August 2025	Updated description and quantity of 93710 on page 214. Added 97101 on page 214.
September 2025	Minor correction to Turntable electrical schematic. Changed 92261 to 32261 on page 242.
October 2025	Added new Platform-to-Jib mount and serial range for page 132.
December 2025	Updated artwork and updated items #30-31 for page 149.
August 2026	Updated item #6 for page 126.
November 2026	Added second top-level assembly part number for page 132. Added “Optional Secondary Guarding” on page 136.

MEC Aerial Work Platforms

1401 S. Madera Avenue, Kerman, CA 93630 USA
Toll Free: 1-877-632-5438
Phone: 1-559-842-1500
Fax: 1-559-842-1520
info@MECawp.com
www.MECawp.com

Table of Contents

Chapter 1 - Service 1
Service Introduction 1

Section 1 - MEC Operator Policy 2
MEC Operator Policy 2

Section 2 - Safety Symbols & General Safety Tips 3
Safety Symbols & General Safety Tips 3

Section 3 - Specifications 4
Specifications 4

Section 4 - Torque Specifications 5
Bolt Torque Specification - American Standard 5
Bolt Torque Specification - Metric Standard 6
Hydraulic Components Torque Table 7

Section 5 - Boom Support 8
Boom Support 8

Section 6 - Hydraulic, Electrical & Total System 9
Hydraulic, Electrical and Total System 9

Section 7 - Primary Machine Components. 10
Primary Machine Components 10

Section 8 - Emergency Systems and Procedures. 11
Emergency Systems and Procedures 11
Auxiliary Power System & Test 12

Section 9 - Transporting and Lifting Instructions 13
Lift and Support the Machine 13
Transportation Instructions 14
Driving or Winching onto or off of a Transport Vehicle. 15

Section 10 - Hydraulic System 18
Hydraulic System – General 18
Hydraulic Roadmap 19
Hydraulic Fluid. 21
Hydraulic Pumps 23
Hydraulic Manifolds 25
Adjusting Relief Valves 27
Wheel Motor Startup Procedure 28
General Cylinder Repair 29

Section 11 - Electrical System 32
Electrical System - General 32
Batteries 34
Battery Replacement 36

Section 12 - Controls 37
Lower Controls. 37
Platform Controls 39

Section 13 - Sensors, Relays & Alarms 41
Sensors 41
Relays 43
Alarms 44

Section 14 - Deutsch Connectors 45
Deutsch Connectors 45

Section 15 - Continuity Checks. 46
Continuity Checks 46

Section 16 - Control System 48
Control System 48
GP500 Calibration 49
GP500 Calibration Procedure 50

Section 17 - Calibration Troubleshooting 55
Failure Messages 55
Information Messages 60
Overload Event Counter Reset 63

Section 18 - Mechanical Components 64
Mechanical Components 64
Nordlock Washers 65
Platform Removal & Installation 66
Platform Rotator 67
Jib Cylinder/Jib Components 69
Platform Level Cylinder 72
Boom Extend Cylinder. 74
Boom Lift Cylinder/Boom Linkage 76
Main Boom Assembly 79
Swing Bearing/Turntable Components 82
Drive Motors & Gear Hubs. 87
Engine Maintenance 89
Lubrication Points 92

Section 19 - Troubleshooting 93
General Troubleshooting Tips 93
Electrical System Troubleshooting. 94
GP500 Module. 95
Terminal Block Module 96
GP440 Module. 97
EZ-Cal Scan Tools. 98
Using The EZ-Cal With The Flow Charts 99
EZ-Cal Messages 102

Can Bus Related Messages 103
Calibration Related Messages 104
Interlock Messages 105
Other Messages 107
Troubleshooting Chart 109

Section 20 - Schematics 115
Electrical Schematic - Lower Schematic 115
Electrical Schematic - Turntable 116
Electrical Schematic - Upper Controls 117
Hydraulic Schematic 118
Main Manifold Valves 119

Chapter 2 - Parts 121
Parts Introduction 121
Upper Controls Box Without PPSS, Part 1 122
Section 21 - Controls 122
Upper Controls Box Without PPSS, Part 2 124
Upper Controls Box With PPSS, Part 1 126
Upper Controls Box With PPSS, Part 2 128
Lower Controls 130

Section 22 - Platform 132
Platform Assembly, 6 Foot 132
Platform Secondary Guarding Assembly 136

Section 23 - Elevating Assembly 138
Jib Assembly, Part 1 138
Jib Assembly, Part 2 140
Platform Rotator Assembly 142
Boom Assembly 144
Boom Assembly, Boom Extend Cylinder 150
Base Boom Assembly 152
Boom Tip Assembly 154

Section 24 - Axles 156
Front Axle Assembly 156

Section 25 - Hydraulics 158
Main Manifold Valves 158
Main Manifold Assembly 160
Manifold Case Drain Assembly 162
Auxiliary Manifold Valves 164
Auxiliary Manifold Assembly 166
Danfoss Pump Assembly 168
Auxiliary Pump Assembly 170
Hydraulic Tank Assembly 172
Charge Filter Assembly 174
Telescope Cylinder Assembly 176
Lift Cylinder Assembly 178

Telescopic Cylinder Assembly 180
Jib Cylinder Assembly 182
Level Cylinder Assembly 184
Axle Lock Cylinder 186
Fuel Tank Assembly 188
Boom Hose Routing, Interior 190
Boom Hose Routing, Exterior 192
Chassis Hose Routing, Top View 194
Chassis Hose Routing, Bottom View 196
Chassis to Turret Hose Routing, Side View 198
Turret Hose Routing, Engine Side Only 200
Turret Hose Routing, Engine to Interior 202
Turret Hose Routing, Engine to Controls 204
Turret Hose Routing, Interior View 206
Turret Hose Routing, Control Side 208

Section 26 - Base **210**
Chassis Assembly, Part 1 210
Chassis Assembly, Part 2 212
Chassis Assembly, Part 3 214
Engine Hood Assembly 216
Engine Side, Hood Stop Assembly 218
Control Hood Assembly 220
Control Side, Hood Stop Assembly 222
D1105 Engine Kit 224
Exhaust Assembly 232
Turret Assembly, Part 1 234
Turret Assembly, Part 2 236
Turret Assembly, Part 3 238
Turret Assembly, Part 4 240
34-J Harness 242

Section 27 - Options **244**
Option, Cold Weather 244
Option, 3.5kW Generator 246
Option, 3.5kW Generator Manifold Assembly 250
Option, Upper Control Box Cover 252
Option, 7.5kW Generator Assembly 254
Option - 7.5kW Breaker Box 256
Option - Subassembly, 7.5kW Outlet Boxes MkII 258
Option - 7.5kW Generator Manifold Assembly 260
Option - Proactive Platform Safety System 262

Section 28 - Decals **264**
Decals 264

Service Introduction

This Service section is designed to provide you, the customer, with the instructions needed to properly maintain the MEC self-propelled aerial work platform. When used in conjunction with the illustrated Parts section in this manual and the Operator's Manual (provided separately), this manual will assist you in making necessary adjustments and repairs, and identifying and ordering the correct replacement parts.

All parts represented here are manufactured and supplied in accordance with MEC quality standards. We recommend that you use genuine MEC parts to ensure proper operation and reliable performance.

To obtain maximum benefits from your MEC Aerial Work Platforms, always follow the proper operating and maintenance procedures. Only trained authorized personnel should be allowed to operate or service this machine. Service personnel should read and study the Operator's, and the Service and Parts Manuals in order to gain a thorough understanding of the unit prior to making any repairs.

MEC Operator Policy

Note: *The best method to protect yourself and others from injury or death is to use common sense. If you are unsure of any operation, **don't start** until you are satisfied that it is safe to proceed and have discussed the situation with your supervisor.*

Service personnel and machine operators must understand and comply with all warnings and instructional decals on the body of the machine, at the ground controls, and platform control console.

DANGER

MODIFICATIONS OF THIS MACHINE FROM THE ORIGINAL DESIGN AND SPECIFICATIONS WITHOUT WRITTEN PERMISSION FROM MEC ARE STRICTLY FORBIDDEN. A MODIFICATION MAY COMPROMISE THE SAFETY OF THE MACHINE, SUBJECTING OPERATOR(S) TO SERIOUS INJURY OR DEATH.

MEC's policies and procedures demonstrate our commitment to Quality and our relentless ongoing efforts towards Continuous Improvement, due to which product specifications are subject to change without notice.

Any procedures not found within this manual must be evaluated by the individual to assure oneself that they are "proper and safe."

Your MEC Aerial Work Platform has been designed, built, and tested to provide many years of safe, dependable service. Only trained, authorized personnel should be allowed to operate or service the machine.

MEC, as manufacturer, has no direct control over machine application and operation. Proper safety practices are the responsibility of the user and all operating personnel.

If there is a question on application and/or operation, contact MEC Aerial Work Platforms:

MEC Aerial Work Platforms

1401 S. Madera Avenue, Kerman, CA 93630 USA
Toll Free: 1-877-632-5438
Phone: 1-559-842-1500
Fax: 1-559-842-1520
info@MECawp.com
www.MECawp.com

Safety Symbols & General Safety Tips

MEC manuals and decals use symbols, colors and signal words to help you recognize important safety, operation and maintenance information.

DANGER	**RED and the word DANGER – Indicates an imminently hazardous situation which, if not avoided, will result in death or serious injury.**
WARNING	**ORANGE and the word WARNING – Indicates a potentially hazardous situation which, if not avoided, could result in death or serious injury.**
CAUTION	**YELLOW with alert symbol and the word CAUTION – Indicates a potentially hazardous situation which, if not avoided, may result in minor or moderate injury.**
CAUTION	**YELLOW without alert symbol and the word CAUTION – Indicates a potentially hazardous situation which, if not avoided, may result in property damage.**
NOTICE	**GREEN and the word NOTICE – Indicates operation or maintenance information.**

Regular inspection and constant maintenance is the key to efficient economical operation of your aerial work platform. It will help to assure that your equipment will perform satisfactorily with a minimum of service and repair.

The actual operating environment of the machine governs the inspection schedule. Correct lubrication is an essential part of the preventative maintenance to minimize wear on working parts and ensure against premature failure. By maintaining correct lubrication, the possibility of mechanical failure and resulting downtime is reduced to a minimum.

- Never leave hydraulic components or hoses open. They must be protected from contamination (including rain) at all times.
- Never open a hydraulic system when there are contaminants in the air.
- Always clean the surrounding area before opening hydraulic systems.
- Use only recommended lubricants. Improper lubricants or incompatible lubricants may be as harmful as no lubrication.
- Watch for makeshift “fixes” which can jeopardize safety as well as lead to more costly repair.

Specifications

Work Height*		40 ft	12.2 m
Platform Height		34 ft	10.4 m
Maximum Drive Height		Full Height	
Maximum Outreach		26 ft	8 m
Turntable Swing		355° Non-Continuous	
Jib Range Of Motion		135°	
Platform Rotation		180° (90° Each Side)	
Machine Weight** (Unloaded)		8,600 lb	3,900 kg
Lift Capacity		500 lb	227 kg
Maximum Occupants		2	
Stowed Height		95 in	2.4 m
Overall Length		20 ft	6.1 m
Overall Width		92 in	2.34 m
Tailswing		12 in	0.3 m
Platform Details	Width	72 in	1.83 m
	Depth	40 in	1 m
	Entry	1 End Swing Gate 2 Slide Bar Entries	
Turning Radius, Inside		6 ft 6 in	2 m
Ground Clearance		8 in	20 cm
Lift Speed		30 sec	
Extend Speed		15 sec	
Jib Lift Speed		15 sec	
Drive Speed (Proportional)	Stowed	0-4.0 mph	0-6.4 km/h
	Raised or Extended	0-0.5 mph	0-0.8 km/h
Gradeability	Stowed, Downhill	40%/22°	
	Stowed, Uphill	40%/22°	
Breakover Angle		40%/22°	
Axle Oscillation		10° (5° Each Side)	
Maximum Allowable Operating Wind Speed		28 mph	12.5 m/sec (45 km/h)
Engine		Kubota D1105 - Tier 4 Final	
Fuel Type		Diesel	
Fuel Capacity		16 gal	60 liter
Hydraulic Fluid Capacity		26 gal	100 liter
Maximum Vibration		Does not exceed 8.2 ft/sec^2 (2.5 m/sec^2) at operator's position	
Ambient Operating Range		-20° F min 120° F max	-29° C min 49° C max
Wheel Lug Nut Torque		150 lb-ft	203 Nm

Sound Pressure At Workstation	80 dB(A)	
Sound Power Level	86 dB @ 1m	
Ground Pressure/Wheel (Maximum)	59 psi	4.15 kg/cm^2
Maximum Wheel Load	2,975 lb	1,350 kg

Meets applicable requirements of ANSI A92.20-2018.

Allowable ambient temperature range: -20° F to 120° F (-29° C to 49°C).
Consult with MEC for operation outside of this range.

*Working Height adds 6 feet (2 m) to platform height.
**Weight may increase with certain options.

Bolt Torque Specification - American Standard

Use the following values to apply torque unless a specific torque value is called out for the part being used.

American Standard Cap Screws								
SAE Grade	**5**				**8**			
Cap Screw Size (inches)								
	Torque				**Torque**			
	Ft-lbs		**Nm**		**Ft-lbs**		**Nm**	
	Min	**Max**	**Min**	**Max**	**Min**	**Max**	**Min**	**Max**
1/4 - 20	6.25	7.25	8.5	10	8.25	9.5	11	13
1/4 - 28	8	9	11	12	10.5	12	14	16
5/16 - 18	14	15	19	20	18.5	20	25	27
5/16 - 24	17.5	19	12	26	23	25	31	34
3/8 - 16	26	28	35	38	35	37	47.5	50
3/8 - 24	31	34	42	46	41	45	55.5	61
7/16- 14	41	45	55.5	61	55	60	74.5	81
7/16 - 20	51	55	69	74.5	68	75	92	102
1/2 - 13	65	72	88	97.5	86	96	116	130
1/2 - 20	76	84	103	114	102	112	138	152
9/16 - 12	95	105	129	142	127	140	172	190
9/16 - 18	111	123	150	167	148	164	200	222
5/8 - 11	126	139	171	188	168	185	228	251
5/8 - 18	152	168	206	228	203	224	275	304
3/4 - 10	238	262	322	255	318	350	431	474
3/4 - 16	274	302	371	409	365	402	495	544
7/8 - 9	350	386	474	523	466	515	631	698
7/8 - 14	407	448	551	607	543	597	736	809
1- 8	537	592	728	802	716	790	970	1070
1 - 14	670	740	908	1003	894	987	1211	1137

Torque values apply to fasteners as received from the supplier, dry or when lubricated with normal engine oil.

If special graphite grease, molydisulphide grease, or other extreme pressure lubricants are used, these torque values do not apply.

Specific Torque Values for Selected Fasteners					
Location	**Qty.**	**Size**	**Type**	**Grade**	**Torque (LB-FT)**
Lug Nuts	36	9/16-18	NUT	8	135
Platform Mount To Rotator	8	M10x1.50	SHCS	12.9	60
Rotator Thru Bolt	1	3/4-10x9	HHCS	8	375
Rotator Thru Nut	1	3/4-10	NNYL	8	
Platform Transition Bolt	4	M20x2.50	HHCS	10.9	250-270
Platform Transition Nut	4	M20x2.50	NNYL	10.9	

Bolt Torque Specification - Metric Standard

Use the following values to apply torque unless a specific torque value is called out for the part being used

Metric Cap Screws								
Metric Grade	**8.8**				**10.9**			
Cap Screw Size (Millimeters)								
	Torque				**Torque**			
	Ft-lbs		**Nm**		**Ft-lbs**		**Nm**	
	Min	**Max**	**Min**	**Max**	**Min**	**Max**	**Min**	**Max**
M6 × 1.00	6	8	8	11	9	11	12	15
M8 × 1.25	16	20	21.5	27	23	27	31	36.5
M10 × 1.50	29	35	39	47	42	52	57	70
M12 × 1.75	52	62	70	84	75	91	102	123
M14 × 2.00	85	103	115	139	120	146	163	198
M16 × 2.50	130	158	176	214	176	216	238	293
M18 × 2.50	172	210	233	284	240	294	325	398
M20 × 2.50	247	301	335	408	343	426	465	577
M22 × 2.50	332	404	450	547	472	576	639	780
M24 × 3.00	423	517	573	700	599	732	812	992
M27 × 3.00	637	779	863	1055	898	1098	1217	1488
M30 × 3.00	872	1066	1181	1444	1224	1496	1658	2027

Torque values apply to fasteners as received from the supplier, dry or when lubricated with normal engine oil.

If special graphite grease, molydisulphide grease, or other extreme pressure lubricants are used, these torque values do not apply.

Hydraulic Components Torque Table

Note: Always lubricate threads with clean hydraulic fluid prior to installation.

Use the following values to torque hydraulic components when a specific value is not available. Always check for torque values in the following places before relying on the Hydraulic Components Torque Table.

- Parts drawings and service instructions in this manual.
- Packaging and instruction sheets provided with new parts.
- Instruction manuals provided by the manufacturer of the component being serviced.

Type: SAE Port Series	Cartridge Poppet		Fittings		Hoses	
	Ft-lbs	Nm	Ft-lbs	Nm	In-lbs	Nm
#4	N/A	N/A	N/A	N/A	135 - 145	15 - 16
#6	N/A	N/A	10 - 20	14 - 27	215 - 245	24 - 28
#8	25 - 30	31 - 41	25 - 30	34 - 41	430 - 470	49 - 53
#10	35 - 40	47 - 54	35 - 40	47 - 54	680 - 750	77 - 85
#12	85 - 90	115 - 122	85 - 90	115 - 122	950 - 1050	107 - 119
#16	130 - 140	176 - 190	130 - 140	176 - 190	1300 - 1368	147 - 155

Boom Support

WARNING

NEVER PERFORM WORK UNDER THE BOOM ASSEMBLY WITH THE PLATFORM ELEVATED WITHOUT FIRST SUPPORTING THE BOOM ASSEMBLY.

DO NOT work beneath the boom assembly with the platform elevated unless the boom assembly is properly supported.

Use a sling and overhead hoist rated for 3 tons (2,700 kg) or more.

Wrap a sling under the outer end of the boom as shown below. Connect it to the overhead hoist, then lift enough that the weight of the boom assembly is being supported by the hoist.

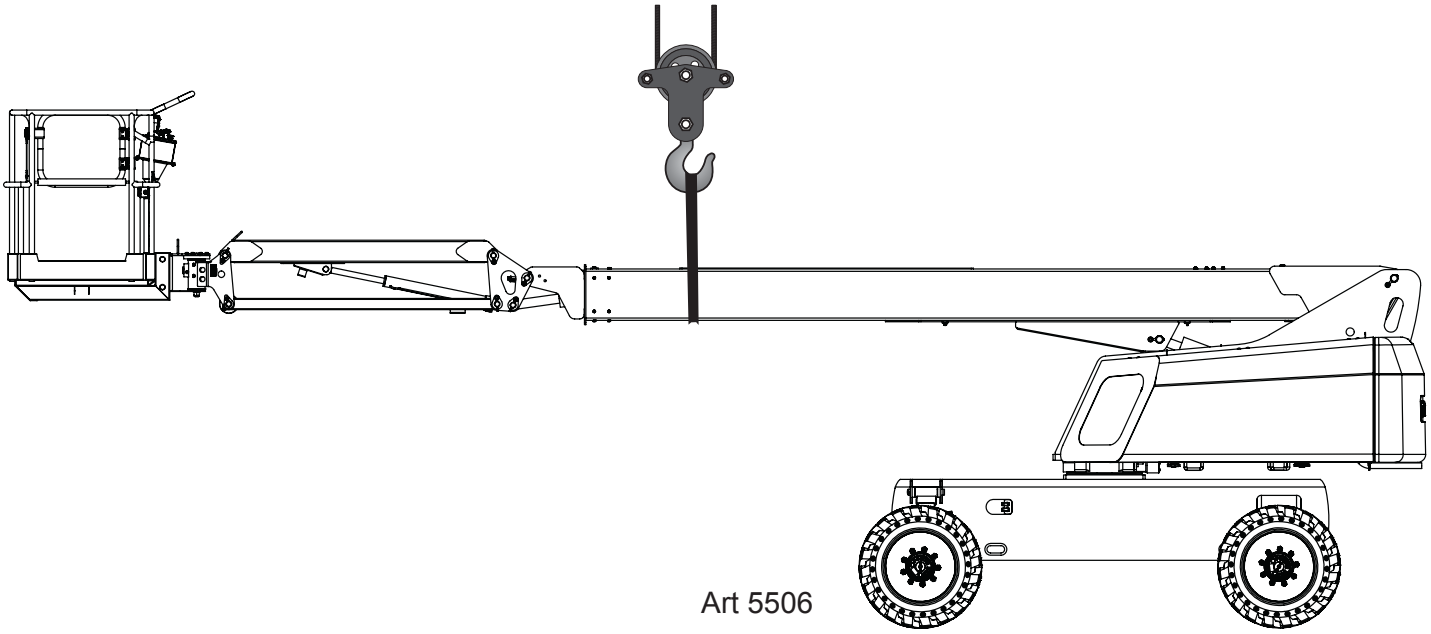

Art 5506

Hydraulic, Electrical and Total System

Hydraulic System

WARNING

HYDRAULIC FLUID UNDER PRESSURE CAN PENETRATE AND BURN SKIN, DAMAGE EYES, AND MAY CAUSE SERIOUS INJURY, BLINDNESS, AND EVEN DEATH.

CORRECT LEAKS IMMEDIATELY.

CAUTION

Hydraulic fluid leaks under pressure may not always be visible. Check for pin hole leaks with a piece of cardboard, not your hand.

Electrical System

CAUTION

To prevent damage to battery and/or electrical system:
- **Always disconnect the negative battery cable first.**
- **Always connect the positive battery cable first.**

When the negative cable is installed, a spark will occur if contact is made between the positive side of the battery and a metal surface on the machine. This can cause electrical system damage, battery explosion, and personal injury.

Total System

WARNING

ENGINE COOLANT LEVEL MUST BE CHECKED ONLY AFTER ENGINE HAS COOLED. IF RADIATOR CAP IS REMOVED WHILE THE COOLANT IS AT NORMAL OPERATING TEMPERATURE, PRESSURE WITHIN THE COOLANT SYSTEM WILL FORCE HOT LIQUID OUT THROUGH THE FILLER OPENING AND MAY CAUSE SEVERE SCALDING.

Failure to perform preventive maintenance at recommended intervals may result in the unit being operated with a defect that could result in injury or death of the operator.

CAUTION

Immediately report to your supervisor any defect or malfunction. Any defect shall be repaired prior to continued use of the aerial work platform.

Inspection and maintenance should be performed by qualified personnel familiar with the equipment.

Primary Machine Components

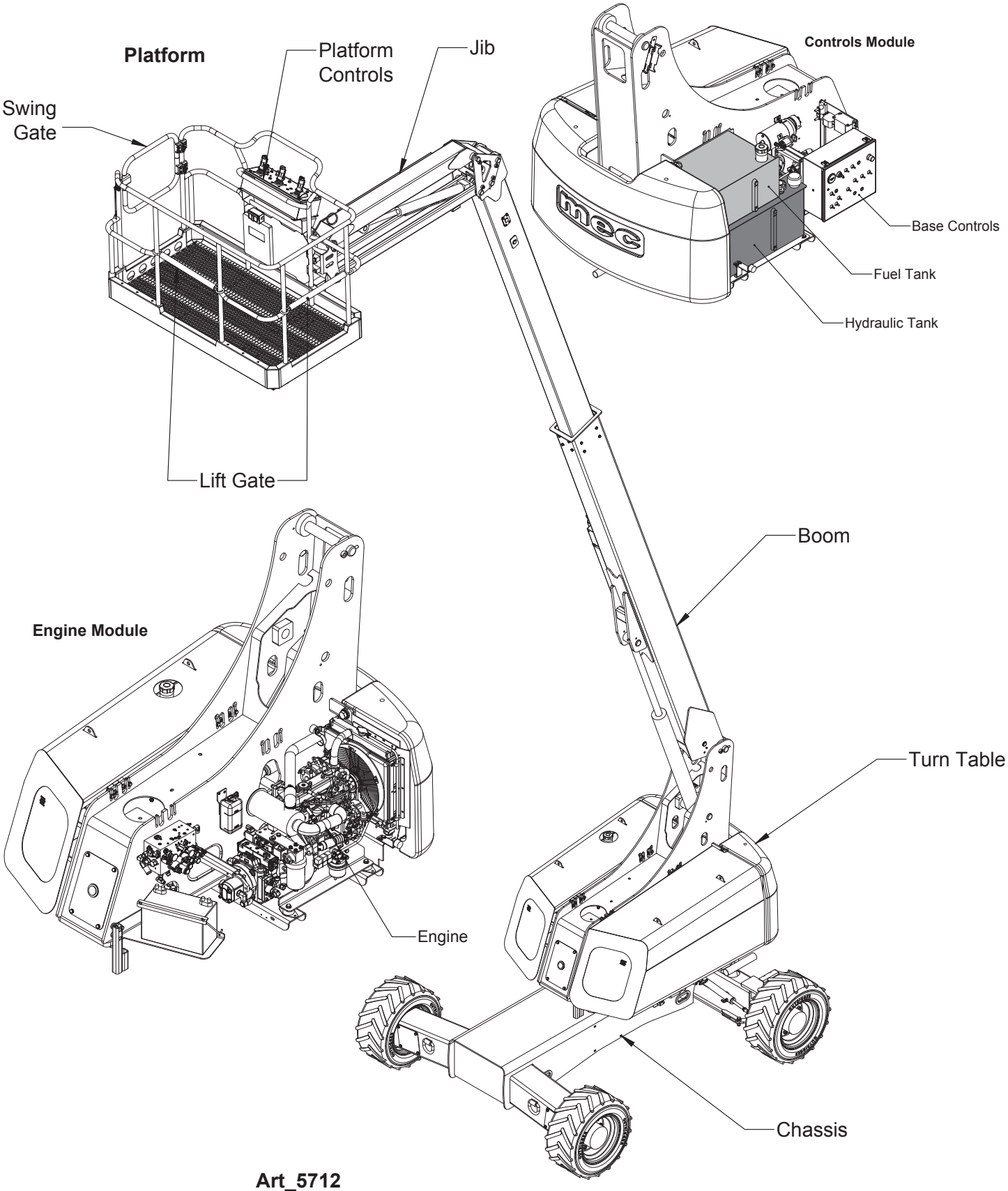

Art_5712

Emergency Systems and Procedures

WARNING

IF THE CONTROL SYSTEM FAILS WHILE THE PLATFORM IS ELEVATED, HAVE AN EXPERIENCED OPERATOR USE THE EMERGENCY LOWERING PROCEDURE TO SAFELY LOWER THE PLATFORM.

DO NOT ATTEMPT TO CLIMB DOWN ELEVATING ASSEMBLY.

Emergency Stop

The machine is equipped with an EMERGENCY STOP switch on both control panels.

- Press the EMERGENCY STOP switch at any time to stop all machine functions.
- Turn switch clockwise to reset.



ART_3353

Selector Switch Set To Platform

- Either switch will stop all machine functions.
- Both switches must be reset or machine will not operate.

Selector Switch Is Set To Base

- The upper controls are locked out.
- The lower controls switch must be reset or the machine will not operate.
- The machine will operate from the lower controls if the upper controls switch is tripped.

Auxiliary Power System & Test

WARNING

IF PRIMARY POWER FAILS WHILE THE PLATFORM IS ELEVATED, USE THE AUXILIARY POWER SYSTEM TO SAFELY LOWER THE PLATFORM. DO NOT CLIMB DOWN THE BOOM ASSEMBLY OR EXIT THE PLATFORM WHILE ELEVATED.

ALWAYS CHECK OVER, UNDER AND AROUND THE MACHINE FOR PERSONNEL, STRUCTURES AND OBSTRUCTIONS BEFORE ACTIVATING ANY CONTROL FUNCTION AND CONTINUE TO WATCH FOR HAZARDS WHILE OPERATING THE MACHINE

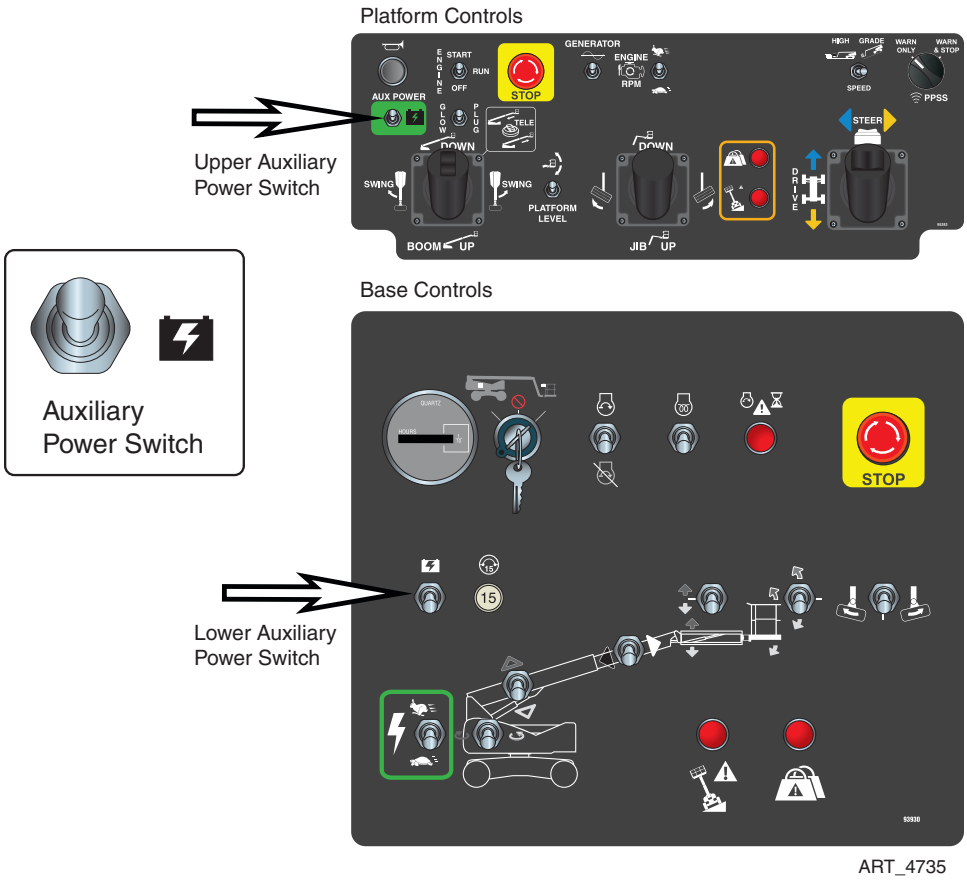

ART_4735

The Auxiliary Power System is used to lower the platform in case of primary power failure. To lower the platform, activate the Auxiliary Power Switch to run the auxiliary hydraulic pump.

This function uses battery power from the battery to lower the platform.

- Push and hold the Auxiliary Power Switch, then use the Boom Extend/Retract function to retract the boom.
- Continue to hold the Auxiliary Power Switch, then use the Boom Lift/Lower function to lower the boom.

Note: The engine will turn off when the Auxiliary Power System is operated.

Note: The Auxiliary Power Switch serves as an enable switch. It is not necessary to use the primary function enable switch.

Lift and Support the Machine

DANGER

DEATH OR SERIOUS PERSONAL INJURY MAY RESULT FROM THE USE OF SUBSTANDARD LIFTING DEVICES AND/OR JACK STANDS. ENSURE THAT ALL LIFTING DEVICES AND JACK STANDS ARE OF ADEQUATE CAPACITY AND IN GOOD WORKING CONDITION BEFORE USE.

BE SURE THAT THE SURFACE BENEATH THE MACHINE IS CAPABLE OF SUPPORTING THE JACK AND JACK STANDS.

REMOVE ALL MATERIAL, TOOLS AND PERSONNEL FROM THE PLATFORM BEFORE LIFTING.

The following are needed to safely lift and support the machine;

- A jack with a lifting capacity of five (5) tons or more.
- Jack stands with a rating of five (5) tons or more.

To Raise The Machine

1. Move machine to a firm level surface capable of supporting the weight of the machine.
2. Chock the tires on the end of machine opposite the end to be raised.
3. If wheel is to be removed, break loose but **do not remove** lug nuts before raising the machine.
4. Position a jack at the end of the machine to be lifted, under a solid lifting point in the center of the frame.
5. Raise the machine and place two (2) suitable jack stands under solid support points at the outer ends of the frame.
6. Lower the machine to rest on the jack stands and inspect for stability.

To Lower The Machine

1. Tighten lug nuts to hold the wheel snug to the hub. Do not torque the lug nuts at this time.
2. Raise machine slightly and remove jack stands.
3. Lower the machine and remove the jack.
4. Tighten lug nuts to proper torque (Refer to Specifications).
5. Remove chocks.

Transportation Instructions

Safety Information

This section is provided for reference and does not supersede any government or company policy regarding the loading, transport or lifting of MEC machinery.

WARNING

Truck drivers are responsible for loading and securing machines, and should be properly trained and authorized to operate MEC machinery. Drivers are also responsible for selecting the correct and appropriate trailer according to government regulations and company policy. Drivers must ensure that the vehicle and chains are strong enough to hold the weight of the machine (see the serial number plate for machine weight).

ONLY properly trained and qualified operators shall load and unload this machine.

Free-wheel configuration for Winching or Towing.

RUNAWAY HAZARD!

DANGER

After releasing the brakes there is nothing to stop machine travel. Machine will roll freely on slopes.

ALWAYS chock the wheels before manually releasing the brakes.

The machine can be winched or towed short distances at speeds not to exceed 5 MPH (8 km/h). Before towing or winching the machine, it is necessary to release the brakes. Reset the brakes after towing or winching.

The machine can be winched or towed short distances at speeds not to exceed 5 MPH (8 km/h). Before towing or winching the machine, it is necessary to release the brakes. Reset the brakes after towing or winching.

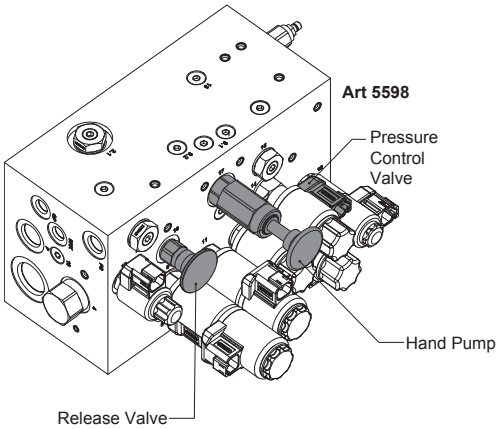

Disengage Brakes before Towing or Winching

- Chock the wheels.
- Push and hold the black button on the Brake Release Valve.
- Press the red button on the Hand Pump valve 8-10 times until there is firm resistance and the brakes release.

Engage Brakes before Driving

- Manually by pulling the black button out on the Brake Release Valve, or
- Automatically by engaging the drive function.

Note: Brakes will reset automatically when drive function is activated.

Driving or Winching onto or off of a Transport Vehicle

Before loading the machine, orient the turntable so that the platform is over the non-steering wheels.

WARNING

ONLY properly trained and qualified operators shall load and unload this machine.

Read and understand all safety, control, and operating information found on the machine and in this manual before operating the machine.

Whether winching or driving the machine on to a truck or trailer, always check the area for dangerous situations before moving the machine.

If driving the machine, always use a second person acting as a spotter to make sure the person loading the machine avoids dangerous situations.

Driving

- Turn the Base Key Switch to PLATFORM. Check that the Emergency Stop Switch is reset by turning it clockwise.
- Enter the platform and reset the Platform Emergency Stop Switch.
- Test platform control functions.
- Raise the jib slightly for platform ground clearance.
- Carefully drive the machine off or on to the transport vehicle.
- Make sure you can see the second person giving guidance.

Note: The brakes are automatically released for driving and will automatically apply when the control lever is returned to neutral which causes the machine to stop.

Winching

- Chock the wheels, then disengage brakes (see Disengage Brakes before Towing or Winching on page 14).
- Carefully operate the winch to lower the machine down the ramp or pull the machine up the ramp.
- Chock the wheels and engage the brakes before disengaging the winch.

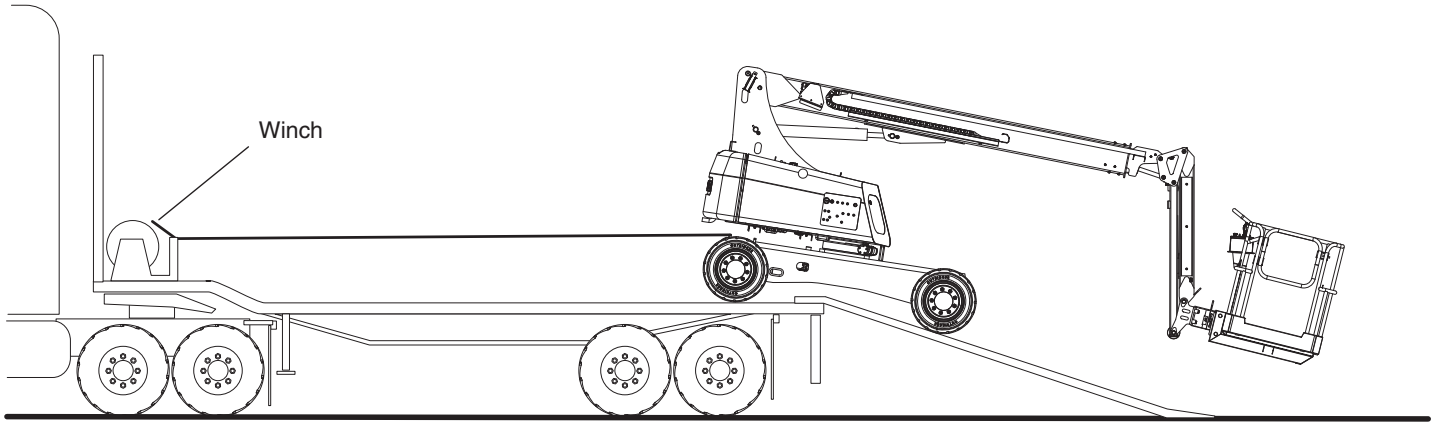

ART_4741

Securing to Truck or Trailer for Transport

- Turn the key Selector Key Switch to OFF and remove the key before transport.
- Turn the Battery Disconnect Switch to OFF before transport.
- Inspect the entire machine for loose or unsecured items.
- Secure the chassis.
- Secure the platform.

Securing the Chassis

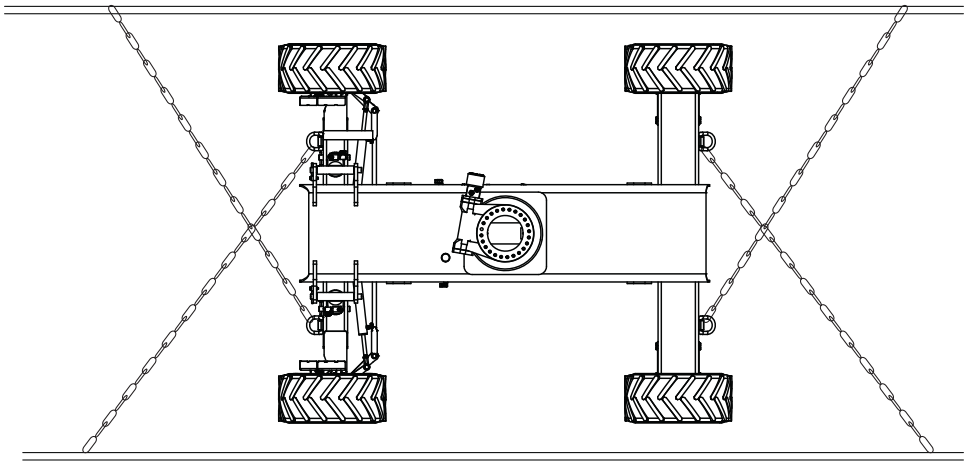

ART_5721

Make sure each of your chains is rated to hold the machine's weight (see serial number plate or Specifications). Use at least 4 chains.

Do not attach chain hooks directly to the machine. Loop the chain through the tie-down point and connect the chain hook to the chain.

Be sure chains are arranged so that they do not damage the machine.

Securing the Platform

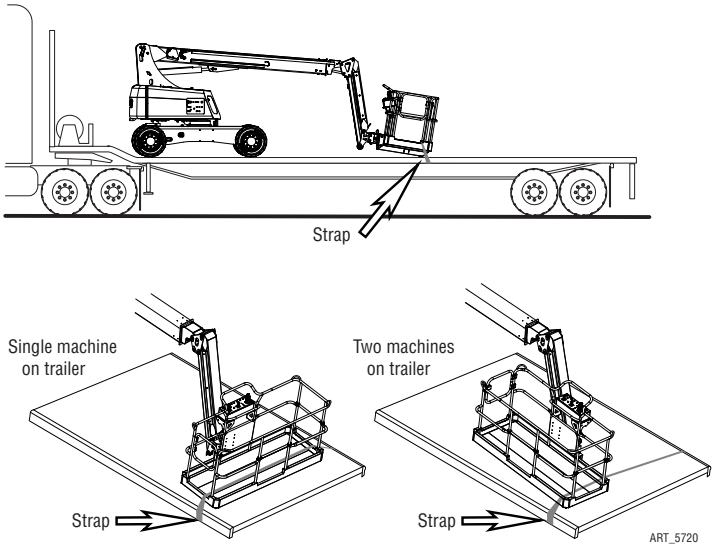

With the boom completely stowed, raise the jib slightly, then use the Platform Level function to lower the platform until the front of the platform touches the trailer surface.

Route the tie-down strap as shown through the width of the platform, over the toe boards of both side entry points. Tighten securely but do not over-tighten.

It may be necessary to turn the platform 90 degrees when loading two machines on the same trailer. In this case, route the strap over the toeboard and through the end of the platform as shown.

Loading Machine(s)

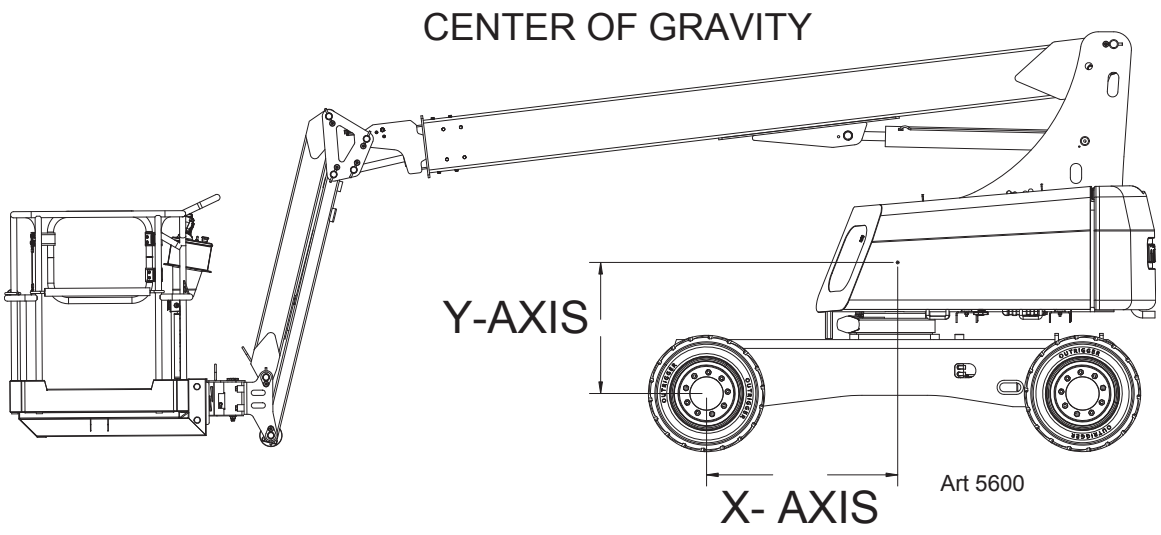

Center of Gravity	X-Axis		Y-Axis	
34-J	43 in *	1085 mm *	26 in *	663 mm *
*** Distance From Center Of Non-steering Wheel**				

Hydraulic System – General

The hydraulic system is designed to control all or part of machine functions by integrating various hydraulic cartridge valves into three manifolds to provide directional, pressure, flow, and load control.

The hydraulic system is a feedback, load-sensing type. Hydraulic fluid is provided by a variable displacement, axial piston-type Drive Pump coupled to the engine and a fixed displacement gear-type Functions Pump mounted to the back of the piston pump. As the engine turns, the hydraulic pumps draw fluid from the reservoir and pump this fluid to the wheel motors and valve manifolds.

Each function has a maximum pressure control limit set by pressure relief valves.

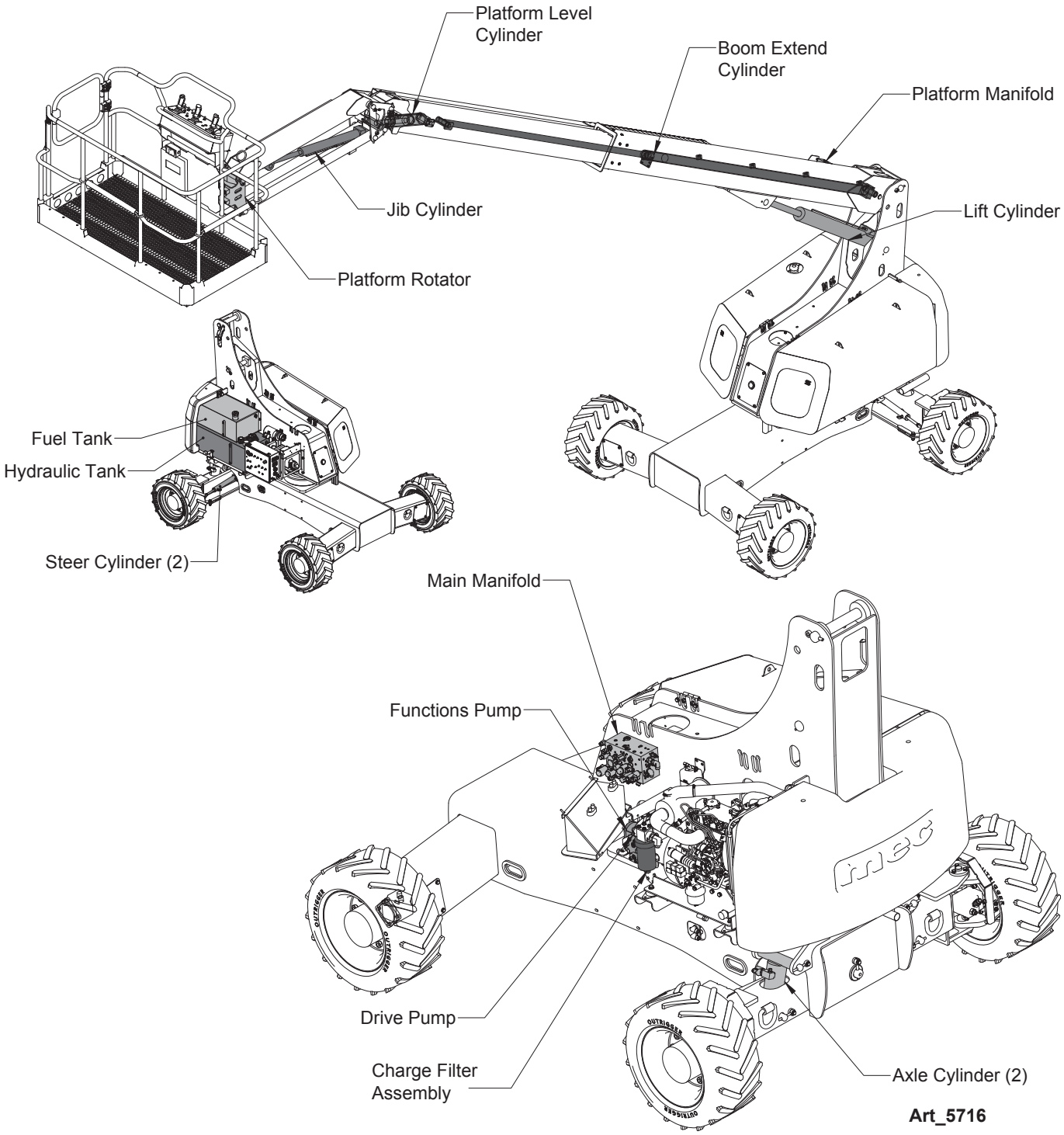

Hydraulic Roadmap

Hydraulic Reservoir

- Hydraulic fluid is held in the reservoir for delivery to the pumps and is returned to the reservoir after use. Returning hydraulic fluid is routed through a filter before entering the reservoir. The reservoir also serves as the oil cooling device.

Drive Pump

- The closed-loop hydrostatic piston-type Drive Pump with infinitely variable proportional control delivers hydraulic fluid under pressure to the Wheel Motors.

Functions Pump

- The gear-type Functions Pump delivers hydraulic fluid under pressure to the Functions Manifold and provides pressure to the platform and turntable functions, in addition to controlling the axle cylinders and the brakes.

Functions Manifold

- The Functions Manifold directs the hydraulic fluid to the Boom Lift, Boom Extend and Steering Cylinders, as well as fluid flow to the Platform Functions Manifold, through the use of electronically-operated solenoid valves.

Platform Functions Manifold

- The Auxiliary Manifold provides hydraulic control to the Platform Level, Platform Rotate and Jib functions.

Wheel Motors/brake Hubs

- There are four hydraulic wheel motors to provide power to all four wheels. The wheel motors turn planetary hubs with integral spring-applied, hydraulically-released brakes. The brakes are released by hydraulic pressure from the Main Manifold. The drive system is hydrostatic; deceleration is provided by the drive motor.

Axle Cylinders

- Two hydraulic cylinders control angle of steering axle relative to the frame. The axle cylinders move freely and allow the axle to float when driving over rough terrain when the platform is stowed. When platform is elevated, the axle cylinders lock in place to increase machine stability. Each cylinder has an integral solenoid valve for load-holding.

Steer Cylinders

- This machine has two Steer Cylinders that control the angle of the steerable wheels.
- Steering is not self-centering.

Boom Lift Cylinder

- One hydraulic lift cylinder raises and lower the boom assembly.

Boom Extend Cylinder

- One hydraulic cylinder extends and retracts the upper boom.

Platform Level Cylinder

- One hydraulic cylinder levels the platform as needed as the boom is raised and lowered.

Platform Rotator

- One rotary hydraulic actuator rotates the platform 90° either side of the centered position.

Jib Cylinder

- One hydraulic cylinder raises and lowers the jib.

Auxiliary Power Unit

- The Auxiliary Power Unit provides hydraulic fluid power to lower the platform in the event of engine failure or emergency.

Hydraulic Fluid

Handling Precautions

PERSONS IN REGULAR CONTACT WITH MINERAL-BASED HYDRAULIC FLUID NEED TO BE AWARE OF THE IMPORTANCE OF THOROUGH HYGIENE AND THE PROPER METHODS FOR HANDLING MINERAL OILS, IN ORDER TO AVOID POTENTIAL HAZARDS TO HEALTH.

WARNING

IF MINERAL-BASED HYDRAULIC FLUID IS SPLASHED INTO THE EYES, IT MUST BE WASHED OUT THOROUGHLY USING ABUNDANT QUANTITIES OF WATER. SEEK MEDICAL ATTENTION IF IRRITATION PERSISTS.

HYDRAULIC FLUID UNDER PRESSURE CAN PENETRATE AND BURN SKIN, DAMAGE EYES, AND MAY CAUSE SERIOUS INJURY OR BLINDNESS.

FLUID LEAKS UNDER PRESSURE MAY NOT ALWAYS BE VISIBLE.

Fluid Recommendations

MEC recommends only the use of the Chevron hydraulic fluids listed in the chart below, and each only in the operating temperatures listed in the chart. Do not substitute other fluids as pump damage may result, and use only the fluid appropriate to the ambient operating temperature.

Recommended Hydraulic Fluid	
> 30° F (0° C)	Chevron 1000THF
0° F (-18° C) ~ 30° F (0° C)	Chevron Rando Premium MV
< 0° F (-18° C)	Chevron Rando Premium MV

System Flushing Procedure

1. With boom fully lowered and retracted, drain hydraulic fluid from hydraulic reservoir into a clean, empty container.
2. When the hydraulic reservoir is empty, remove suction strainer and hoses.
3. Remove the filter elements.
4. Flush the hoses with clean hydraulic fluid.
5. Discard old filter elements and replace.
6. Flush out the reservoir with hoses removed from the hydraulic reservoir.
7. Reinstall all hoses removed in the previous steps.
8. Fill hydraulic reservoir with filtered, fresh hydraulic fluid. Use only the appropriate hydraulic fluid as recommended in “Fluid Recommendations” above.
9. Loosen the output hose fittings at the hydraulic pumps to flood with hydraulic fluid. Tighten fittings.
10. Disconnect the wiring harness lead to the Fuel Solenoid on the engine.
11. Crank the engine for 5 seconds, then stop for 30 seconds. Do this three times.
12. Reconnect the wiring harness lead to the Fuel Solenoid on the engine.
13. Start the engine and allow it to run for one minute, then briefly operate all functions. Two or three

complete cycles may be necessary to purge all air from Boom Lift and Boom Extend cylinder(s).

14. When the above procedures have been completed, lower the platform and jib to the stowed position, and retract the boom completely then fill hydraulic reservoir to the full mark on sight gauge.
15. Check for leaks and correct as necessary. Machine is now ready to be placed into operation.

Hydraulic Fluid Reservoir

The Hydraulic Fluid Reservoir Assembly consists of the reservoir, a filler cap with breather, a drain plug, a sight gauge, and a bypass filter with a 10 micron filter element.

- Check reservoir for signs of leakage weekly.

Hydraulic Filters

WARNING **BEWARE OF HOT FLUID. CONTACT WITH HOT FLUID MAY CAUSE SEVERE BURNS.**

The Hydraulic Fluid Reservoir contains a return filter. Additionally, all machines have a Charge Filter Assembly attached to the engine and a high pressure filter on the output side of the Functions Pump.

When the filter is clogged, hydraulic flow bypasses the filter element.

Replace all filter elements every six (6) months or 500 hours. Extremely dirty conditions may require that the filter be replaced more often.

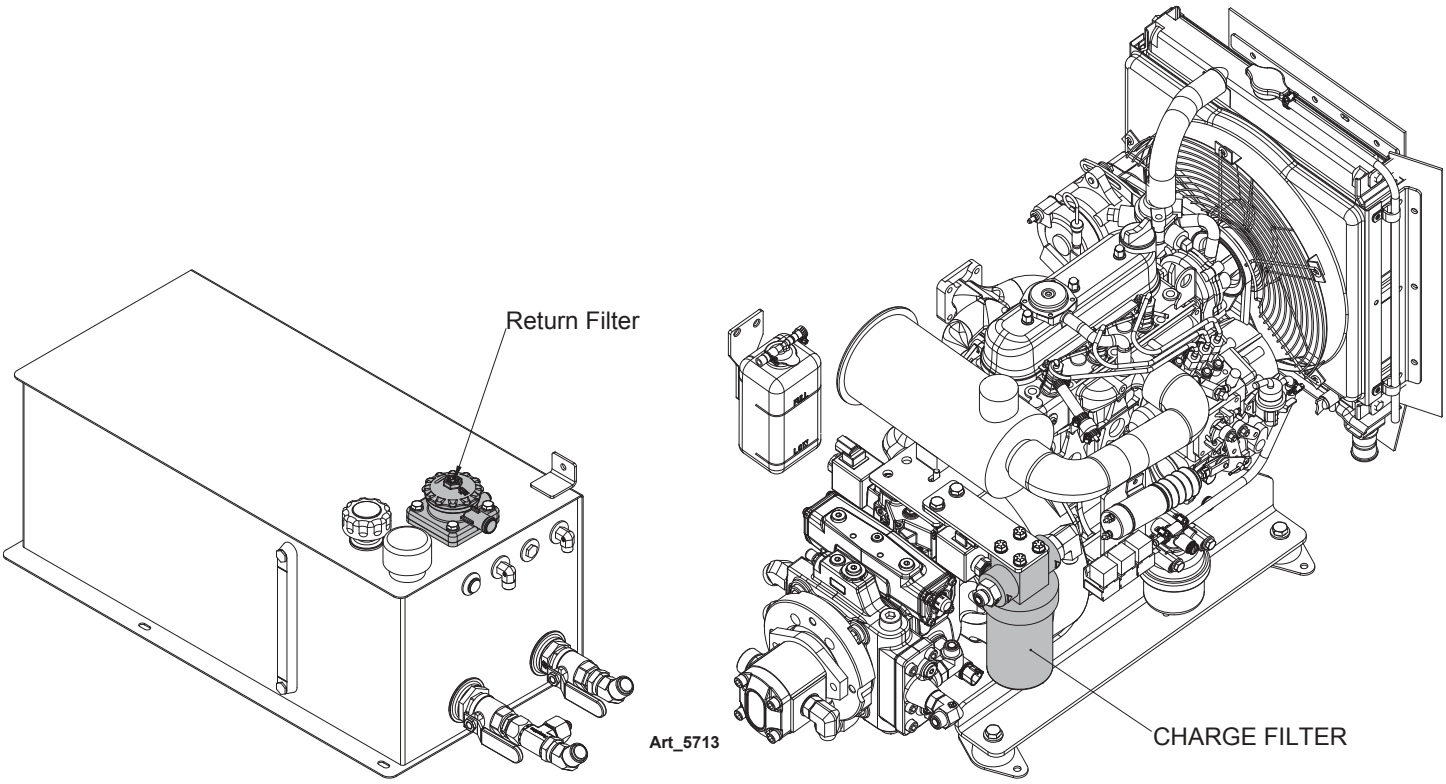

Hydraulic Pumps

Note: Refer to Parts Section 25 - Hydraulics.

An internal combustion engine drives the Drive and Functions Pumps.

The Drive Pump is a variable displacement axial piston pump that provides hydraulic power to the Drive Motors. This is a hydrostatic drive system.

The Functions Pump is a gear pump that provides hydraulic power to the Functions Manifold.

Remove

1. Disconnect the battery.
2. Place a large container under the engine and pumps to catch fluid that will be lost during pump replacement. Dispose of used fluid properly.
3. Close the ball valve on the Hydraulic Tank to prevent fluid loss when the hoses are removed.
4. Tag and disconnect hydraulic hoses, and IMMEDIATELY cap or cover the openings to prevent contamination.
5. Remove the bolts that secure the Functions Pump. Remove the pump.
6. Drive Pump weighs 110 LBS. Support as necessary to prevent personal injury.
7. Remove the bolts that hold the Drive Pump to the engine. Remove the pump.
8. Installation is reverse of removal. Apply one (1) drop of Loctite® 242 or equivalent to each mounting bolt.
9. Open the ball valves on the Hydraulic Tank.
10. Loosen the output hose fittings at the hydraulic pumps to flood with hydraulic fluid. Tighten fittings.

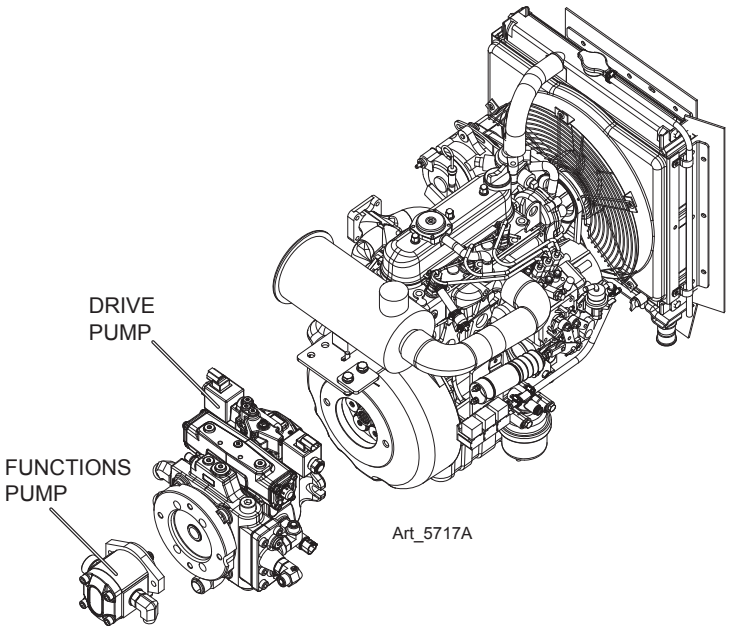

CAUTION

Failure to open the ball valves on the Hydraulic Tank will result in damage to the pumps.

DO NOT operate the hydraulic pump until you have filled them with fluid and bled all air out of them. Severe damage will occur.

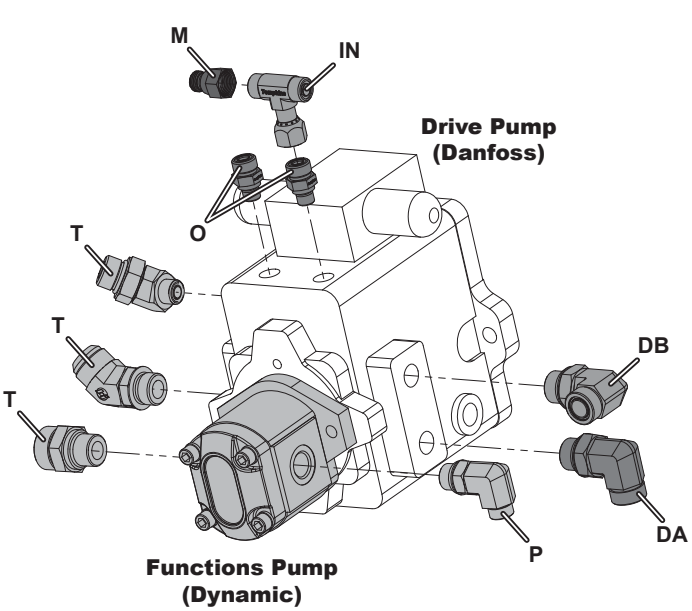

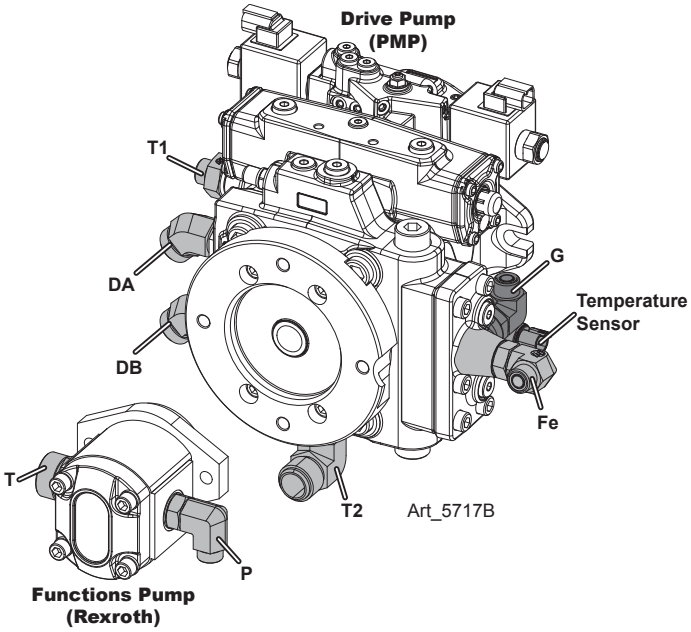

Drive Pump

Port	Connection	Port	Connection
DA	Drive Motor Port A	T2	Out To Hydraulic Reservoir
DB	Drive Motor Port B	G	In From Charge Filter
T1	Out To Hydraulic Reservoir	Fe	Out From Charge Filter

Functions Pump

Port	Connection
P	Out To Pressure Filter
T	In From Hydraulic Reservoir

Drive Pump

The Drive Pump provides fluid to power the machine's Drive Function.

The Drive Pump must be filled with fluid and all air bleed out any time the pump is removed and re-installed, or drained of fluid for any reason. To prime the pump, loosen the output hose fittings at the hydraulic pumps to flood with hydraulic fluid. Tighten fittings.

Drive Pump Service

MEC does not recommend end-user maintenance or repair of the Drive Pump on the 34-J machines. Contact MEC or PMP for the nearest service provider.

Functions Pump

The Functions Pump is a fixed-displacement gear pump. Power to functions is controlled by the proportional valves, and unused pressure is returned to the tank.

The Functions Pump must be filled with fluid and all air bleed out any time the pump is removed and re-installed, or drained of fluid for any reason. To prime the pump, loosen the output hose fittings at the hydraulic pumps to flood with hydraulic fluid. Tighten fittings.

Hydraulic Manifolds

Note: Refer to Parts Section 25 - Hydraulics.

This machine has three hydraulic valve manifolds: the Main Functions Manifold, and the Boom Functions Manifold.

Additional hydraulic manifolds include the Brake and Steering junction blocks at the steering end of the chassis.

CAUTION

Clean all fittings before disconnecting hoses.

Tag all hoses and wiring for proper reassembly.

Plug all openings immediately to prevent contamination.

Replace any O-rings and inspect all hoses for crack and damage before reassembly.

Removal

1. Disconnect the negative battery terminal.
2. Close the ball valves on the Hydraulic Tank to prevent fluid loss when the hoses are removed.
3. Tag and disconnect the solenoid valve electrical leads.
4. Tag and disconnect hydraulic hoses. Immediately cap the openings to prevent contamination.
5. Remove the bolts that hold the manifold to the mounting bracket.
6. Remove the manifold block.

Disassembly

1. Remove coils from solenoid valves.
2. Mark and remove valves.
3. Mark and remove fittings, plugs, springs, balls, and orifices.

Cleaning And Inspection

1. Wash the manifold in cleaning solvent to remove built-up contaminants, then blow out all passages with clean compressed air.
2. Inspect the manifold for cracks, thread damage and scoring where O-rings seal against internal and external surfaces.
3. Wash and dry each component and check for thread damage, torn or cracked O-rings, and proper operation.
4. Replace defective parts and O-rings.

Assembly

Note: Lubricate all O-rings before installation to prevent damage to the O-ring. Seat balls in manifold block by lightly tapping on the ball with a brass drift punch.

1. Install fittings, plugs, springs, balls, and orifices. Use one drop of Loctite 242 or equivalent thread locker on each screw-in orifice.

2. Install valves. Use torque chart in Section 4 - Torque Specifications for proper valve torque.

Installation

1. Attach manifold assembly to mounting plate with mounting bolts.
2. Connect solenoid leads as previously tagged.
3. Connect hydraulic hoses as previously tagged. Be certain to tighten hoses.
4. Open the ball valves on the Hydraulic Tank.

CAUTION **Failure to open the ball valves on the Hydraulic Tank will result in damage to the pumps.**

5. Connect the battery.
6. Operate each hydraulic function and check for leaks and for proper operation.
7. Adjust valve pressures.

Hydraulic Pressure Adjustment

Before attempting to check and/or adjust pressure relief valves, operate the machine for 15 minutes or long enough to sufficiently warm the hydraulic fluid to normal operating temperature.

Insert a 0-5000 psi gauge onto the appropriate pressure test port GP using gauge adapter fitting MEC part no. 50974. See next page for GP and Relief Valve location.

34-J Diesel Pressure Settings			
System	**Setting**		**Adjustment**
Main Functions Manifold Relief	3,200 psi	207 bar	@ Primary Functions Pump

Adjusting Relief Valves

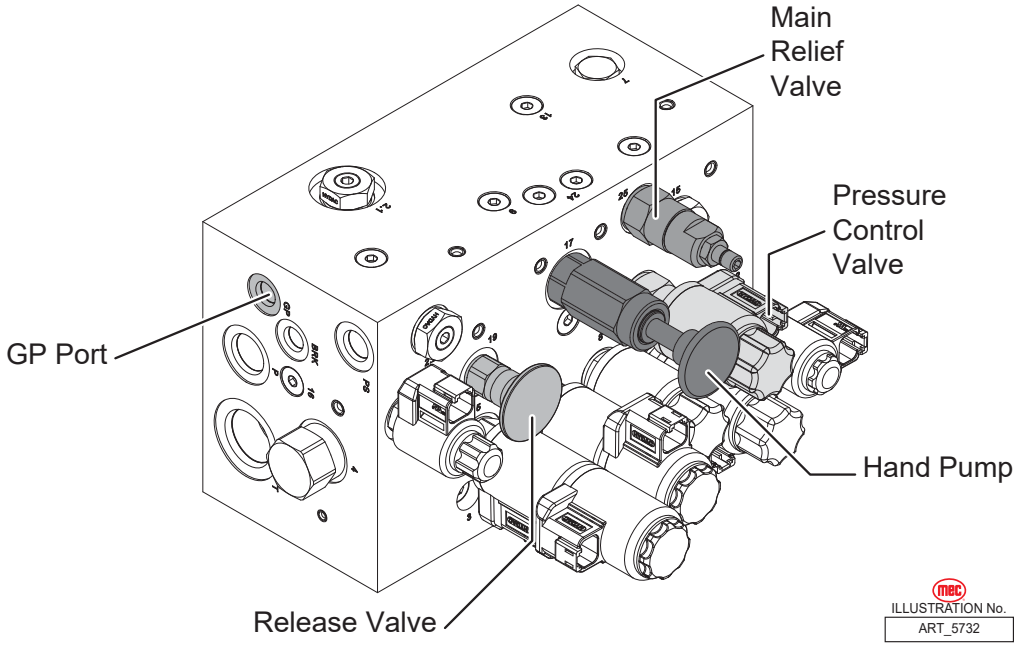

Counterbalance Valves

The counterbalance valves located on many of the cylinders are set by the manufacturer and should not be adjusted for any reason.

Replace any counterbalance valve that shows evidence of adjustment or tampering.

Main Pressure Control Valve

Main pressure control valve is controlled electronically, all adjustments are made electronically. No mechanical adjustments can be made to this valve.

Main Functions Manifold Relief Adjustment

The Main Relief Valve should not require adjustments. If valve shows signs of tampering, replace the valve or call MEC Technical Support Department at 877-632-5438.

Wheel Motor Startup Procedure

Follow this procedure when restarting a machine on which the Drive Motors have been:

- Removed and re-installed, or
- Drained of fluid for any reason.

WARNING

UNINTENDED MOVEMENT OF THE MACHINE OR MECHANISM MAY CAUSE INJURY. SECURE THE MACHINE BEFORE PERFORMING THIS PROCEDURE.

CAUTION

Clean all fittings before disconnecting hoses.

Tag all hoses and wiring for proper reassembly.

Plug all openings immediately to prevent contamination.

Replace any O-rings and inspect all hoses for crack and damage before reassembly.

Inspect each Drive Motor for damage prior to installation. Use only the appropriate hydraulic fluid as recommended in “Fluid Recommendations” on page 21.

1. Fill the reservoir with the appropriate hydraulic fluid as recommended in “Fluid Recommendations” on page 21. Always filter fluid through a 10 micron filter when pouring into the reservoir. Never reuse hydraulic fluid.
2. Fill the inlet line leading from the pump to the drive motor. Check the inlet line for properly tightened fittings and be certain it is free of restrictions and air leaks.
3. Reconnect all hoses.
4. Start the engine and allow it to run for one minute, then test the Drive Function for proper operation.

Repair

MEC does not recommend end-user maintenance or repair of the drive motors. Contact MEC for the nearest service provider or replacement.

General Cylinder Repair

WARNING

WHEN REMOVING ANY HYDRAULIC CYLINDER, ENSURE THAT THE COMPONENTS IT SUPPORTS ARE THEMSELVES SECURELY SUPPORTED PRIOR TO BEGINNING ANY REMOVAL.

CYLINDERS ARE HEAVY. SUPPORT CYLINDERS BEFORE REMOVING HARDWARE THAT SECURES THE CYLINDER TO THE MACHINE.

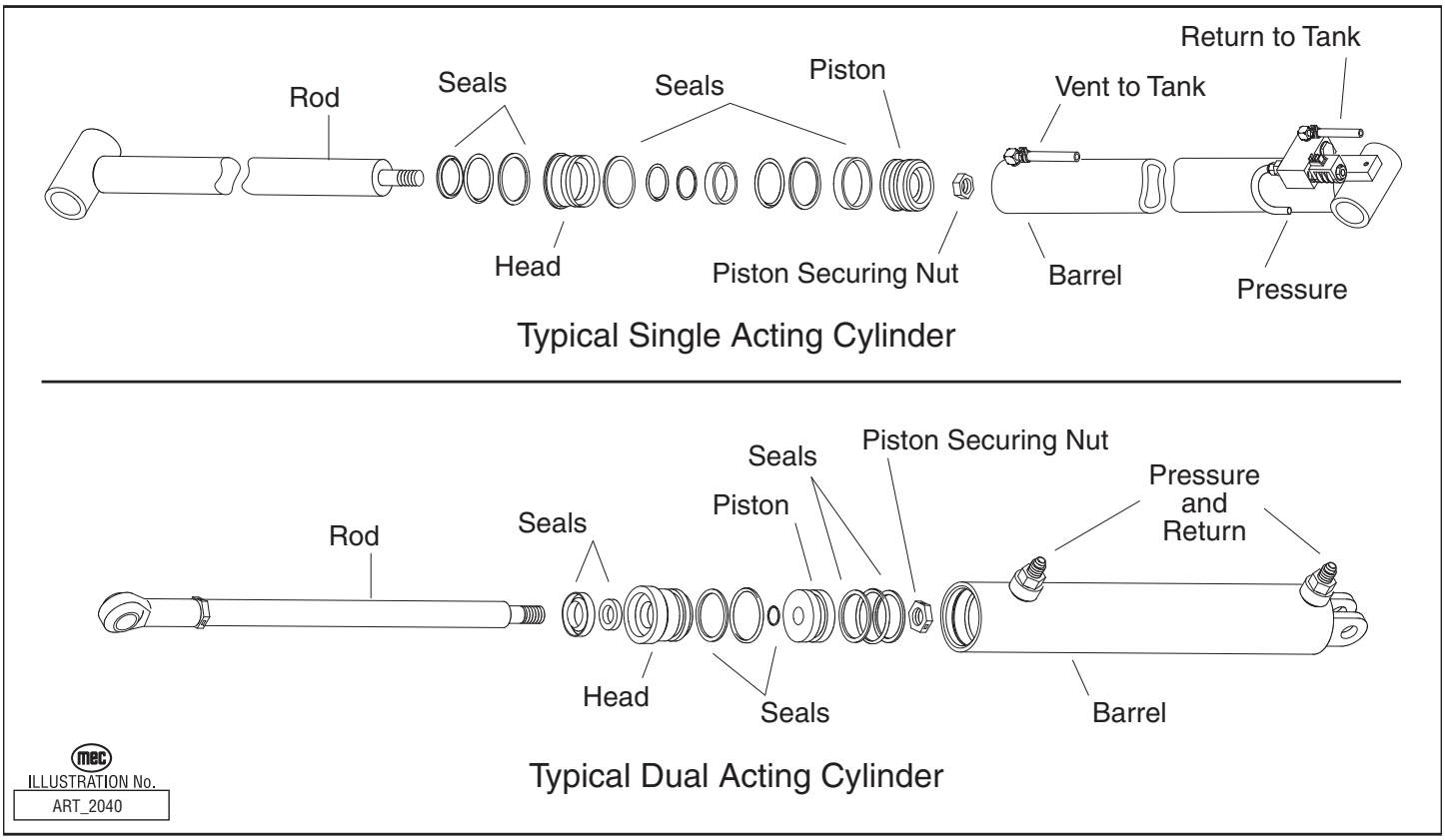

Removal

Note: Refer to Section 18 - Mechanical Components for Remove and Replace instructions, and the Parts Manual for a list of hardware specific to the cylinder being repaired.

1. Tag hoses for proper reassembly.
2. Disconnect hoses and IMMEDIATELY cap the openings to prevent contamination.
3. Remove cylinder from the machine as described in Section 18 - Mechanical Components.

Preparation

CAUTION

Take precautions to protect the rod surface. Guard against dirt or other foreign objects entering system.

1. Drain all fluid from cylinder.
2. Clean all dirt and grit from outside of cylinder.
3. Insert cylinder into vise.

CAUTION **DO NOT overtighten the vise. Overtightening may damage the cylinder.**

Cylinder Disassembly

1. Remove solenoid valves or counterbalance valves, if the cylinder is equipped with them.
2. Remove the head from the cylinder body. Cylinder head may have a set screw.
3. Remove the shaft assembly from the barrel, pulling in a straight line, so as not to scar the internal parts.
4. Insert shaft into a **soft jawed** vise so that the head and piston can be removed. Be sure the shaft and vise are both clean before using.
5. Remove nut at the end of the shaft and pull head and piston off of the rod.

Some pistons may be threaded onto the end of the rod and secured with a set screw. Remove the set screw before attempting to remove the piston to avoid damage to the rod and piston.

6. Remove all seals from the head and piston using a non-sharp seal tool. These tools are available from various seal suppliers.
7. Clean all fluid and debris off of the head, piston, shaft, collar and barrel using solvent, rags, and an air hose.
8. Inspect parts for scratches, pits or polishing. Check seal groves and sealing surfaces.
   a. Scratches or pits deep enough to catch the fingernail are unacceptable; replace the cylinder.
   b. Polishing is a sign of uneven loading. Check for roundness. If a polished surface is not round within .007 in. (0.18 mm) replace the cylinder.

Cylinder Assembly

To ensure a quality repair, cylinder parts must be thoroughly cleaned, dry, and free of solvents, and assembly must be performed in a clean area free of dust and contamination.

CAUTION **Do not use sharp edged tools during seal replacement. After installing seals wait at least one hour before assembling the cylinder to allow the seals to return to their original shape.**

Torque all hardware according to the Hydraulic Components Torque Table unless otherwise specified.

1. Lubricate all components with clean hydraulic fluid.
2. Install new seal kit components. Install all seals on the head and piston using the non-sharp seal tool.
3. Place a small amount of fluid on the inside head seals. Reinstall the head on the shaft by slipping head over the piston end of the shaft. Be very careful not to damage the inside seals.

4. Place a small amount of fluid on the inside seals of the piston. Reinstall the piston on the shaft by slowly twisting the piston onto the threads of the shaft. Be very careful not to damage the inside seals.
5. Reinstall the shaft nut. Torque 1 ½" nut to 160 ft-lbs. (216 Nm).

On pistons with set screws, tighten the set screw.

1. Grease the outside seals of the head and piston.
2. Reinstall the shaft into the barrel of the cylinder and push in until groove of the head lines up with the slot in the barrel.
3. Reinstall the cylinder retainer. Installation is reverse of removal.
4. Reinstall any solenoid valves or counterbalance valve removed during disassembly.
5. Cycle the cylinder using air to check for proper operation.

Note: Keep all parts clean when working with hydraulic cylinders. Even one small piece of dirt or grit can damage the cylinder.

Electrical System - General

The electrical control system consists of lower controls located on the machine base and upper controls located on the machine platform. Emergency lowering controls are located at each control station.

Lower Controls

The lower controls operate all functions except the steer and drive functions.

Upper Controls

The upper controls operate all machine functions. A momentary bi-directional rocker switch on the drive control handle provides the steering function. The control system for operation of drive, steer, lift, and lower is electric-over-hydraulic type. The lift, turntable rotate, platform rotate, jib and drive functions are proportional and are controlled by position and direction of the upper controls joysticks.

Emergency Stop

There are two red Emergency Stop switches, one located on the upper controls and one on the lower controls. Press the switch to stop all electrical power and turn the switch clockwise to reset. When both Emergency Stop switches are “set”, the controls have electrical power and the machine will operate.



ART_3353

When operating from the lower controls station, only the lower Emergency Stop switch affects machine operation. Activation of the lower Emergency Stop switch in this situation will immediately cut electrical power to all controls and stopping all machine functions.

When operating from the upper controls, activation of either Emergency Stop switches will immediately cut electrical power to all controls and stopping all machine functions.

Note: Both switches must be set or the machine will not operate from the upper controls.

Note: The electric Emergency Lowering switch will continue to function when the Emergency Stop switches are depressed.

Auxiliary Power System

The Auxiliary Power System is used to lower the platform in case of power failure. To lower the platform, activate the Auxiliary Power Switch to run the auxiliary hydraulic pump.

This function uses battery power from the main battery to lower the platform.

- Push and hold the Auxiliary Power switch, then use the Boom Extend/Retract function to retract the boom.
- Continue to hold the Auxiliary Power switch, then use the Boom Lift/Lower function to lower the boom.

Note: The Auxiliary Power System will stop the engine when operated.

Note: The Auxiliary Power switch serves as an enable switch. It is not necessary to use the primary function enable switch.

Diagnostic LED & EZ-Cal Diagnostic Tool

If the machine fails to operate, inspect the GP500 Module located inside the control box. The LED located on the processor should be ON. If the LED is OFF or FLASHING, refer to Section 19 - Troubleshooting. This section also contains instructions on the use of the EZ-Cal diagnostic tool.

Starter Circuit Cutout

To protect the starter motor, power cuts off to the starter circuit when the starter motor has run continuously for 10 seconds without starting the engine. The Starter Circuit Cutout indicator light on the Lower Controls Box will turn on during this time. Power to the starter circuit reengages after 30 seconds.

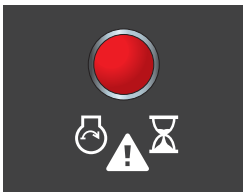

ART_3342

Batteries

CAUTION

Discharged batteries can freeze, causing damage to the battery and/or battery case. A broken battery case will allow electrolyte to leak out.

WARNING

BATTERIES UNDER CHARGE CREATE EXPLOSIVE HYDROGEN GAS. KEEP SPARKS, FLAMES AND SMOKING MATERIALS AWAY FROM BATTERIES.

ALWAYS WEAR SAFETY GLASSES WHEN WORKING WITH BATTERIES.

BATTERY FLUID IS CORROSIVE. THOROUGHLY RINSE SPILLED FLUID WITH CLEAN WATER.

REPLACE ONLY WITH MANUFACTURER-APPROVED BATTERIES.

BEFORE DISCONNECTING THE BATTERY NEGATIVE (–) LEAD, MAKE SURE THAT ALL SWITCHES ARE OFF. IF ON, A SPARK WILL OCCUR AT THE GROUND TERMINAL THAT COULD IGNITE HYDROGEN GAS OR FUEL VAPORS.

One 12 Volts DC battery supplies the electrical power required to start the engine and\ to operate the electrical circuits. An optional second may be present in machines to provide additional power for the Emergency Down power unit.

Battery Maintenance (In Storage)

Follow these procedures for maintenance of battery on a machine not in use:

- Keep battery clean. Electrolyte of batteries should be checked regularly and kept at proper level.
- Never stack one battery directly on top of another because post or container damage can result. If batteries are stored individually, place supporting boards between layers. Rotate stock so that the oldest batteries are used first.
- Batteries should be kept fully charged. A battery, while in storage, should be recharged to full charge at recommended intervals.

A battery fully charged (100%) at 80°F (26.6°C)

- Drops to 65% at 32°F (0°C)
- Drops to 40% at 0°F (-32°C)

Recommended Battery Charge Intervals

If Stored At	Recharge
Below 40°F (4°C)	Every week
40°-60°F (4°-15°C)	Every 2 weeks
Above 60°F (15°C)	Every month

Battery Maintenance (In Use)

Check battery and surrounding area for signs of damage or corrosion.

Check battery terminals for:

- **Corrosion:** Regularly clean connections and apply a nonmetallic grease or protective spray to retard corrosion.
- **Loose connections:** Be sure all cable connections are tightly secured, and that good contact is made with terminals.
- **Broken or frayed cables:** Be sure all connections are good and that no loose or broken wires are exposed. Replace as necessary.

Check battery electrolyte level. Replenish the electrolyte, if necessary. Remove vent caps before filling, and USE ONLY DISTILLED WATER. DO NOT OVERFILL. Fill to level indicator (or ½ inch over the top of separators, if there is no level indicator). Fill after charging to prevent overflow of acid due to expansion. Do not use a hose to add water to batteries.

Allowing the electrolyte level to drop below the top of the separators will lead to shortened battery life.

Excessive water usage can indicate that a battery has been overcharged, has been subjected to excessively high temperatures, or is nearing the end of its service life.

Battery Preventative Maintenance

During quarterly maintenance (after battery has been charged), check the specific gravity of two or more cells. A fully charged battery should indicate 1.28 specific gravity.

If low readings are noted, check the following:

- Check terminals for corrosion, loose connections and broken or frayed cables.
- Check all cells with a hydrometer for variance in specific gravity. A variation of 0.03 points or more between cells is a cause for concern. Mark the low cells.

Recheck specific gravity of all cells after recharging. Wash the top of the battery, making sure all vents are in place. Do not allow cleaning water or other foreign matter to enter the cells. Use a solution of bicarbonate soda (5 tsp. of baking soda per quart of warm water) and water to wash the battery if there is an accumulation of acid.

Specific Gravity		Volts DC		
	Each Cell	Per Cell	6V Battery	12V Battery
Fully Charged	1.280	2.10	6.30	12.60
Fully Discharged	1.130	1.75	5.19	10.50

Battery Replacement

WARNING

TURN OFF THE BATTERY DISCONNECT SWITCH BEFORE REMOVING ANY BATTERY FROM THE MACHINE.

CAUTION

Prevent damage to the battery and/or electrical system;

- **Always disconnect the negative battery cable first.**
- **Always connect the positive battery cable first.**

To Remove A Battery:

1. Turn the Battery Disconnect switch to OFF.
2. Disconnect the battery cables and remove battery hold-down hardware.
3. Lift the battery from the compartment, put the battery aside and dispose of properly.

To Install A Battery:

1. Position the battery in the compartment and secure with hold-down hardware.
2. Connect battery cables.

Lower Controls

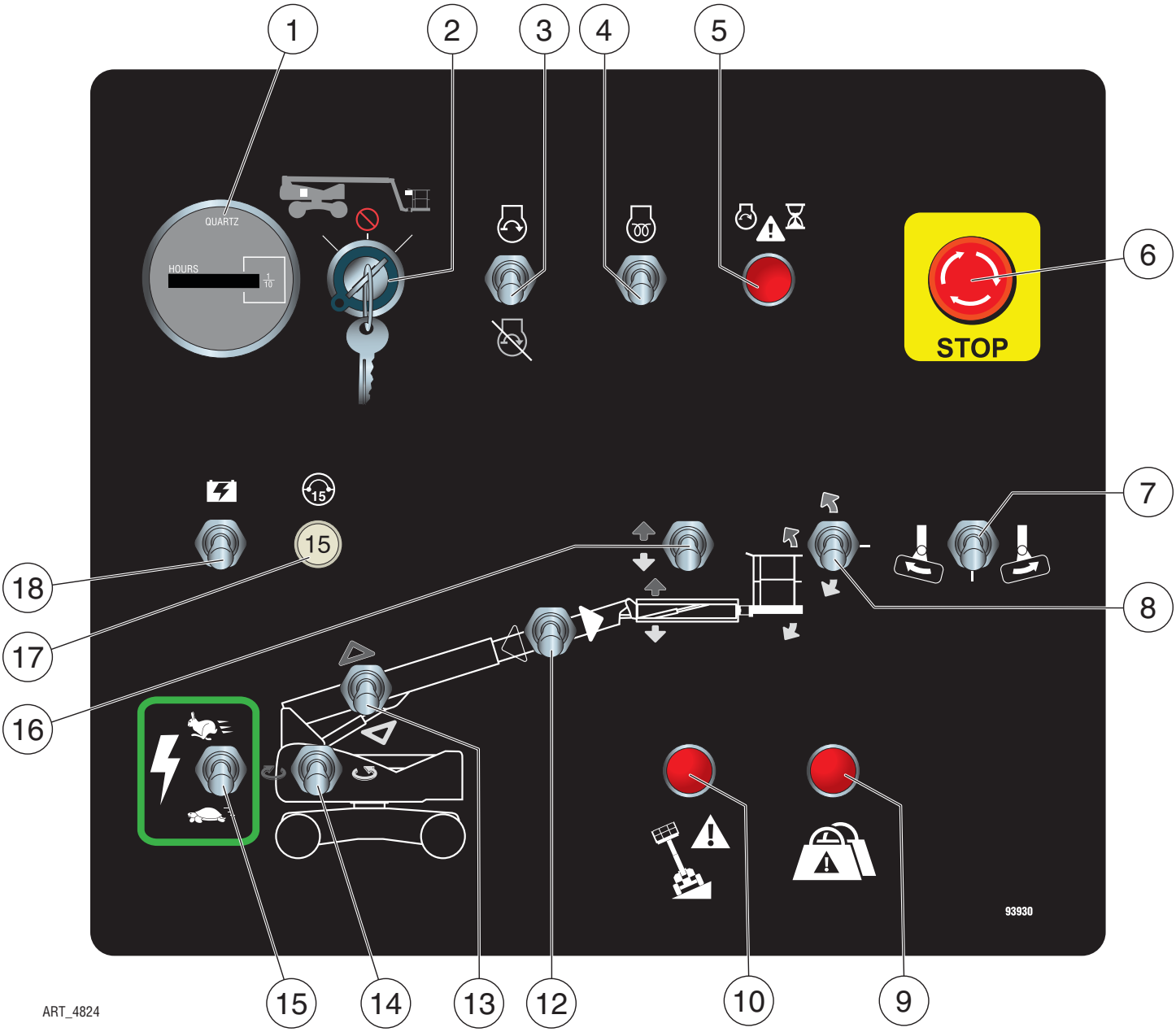

WARNING **ALWAYS check over, under and around the machine for personnel, structures and obstructions before activating any control function and continue to watch for hazards while operating the machine.**

Control		Description	
1	Hour Meter	Indicates total elapsed time of machine operation.	
2	Selector Switch	Platform	Select to operate from the platform control panel.
		Base	Select to operate from the base control panel.
		Off	Select to stop operation from either control panel.
3	Start/Stop Switch	Push switch up to start engine. Push switch down to stop engine.	
4	Glow Switch	Press this switch up to activate glow plugs prior to starting.	

5	Starter Time-out Indicator	When this red light is illuminated, the starter circuit is temporarily disabled. The starter circuit times out if the starter is run continuously for 15 seconds without the engine starting. The starter functions resets after approximately 30 seconds. Functions as Engine ECU Fault Code indicator.
6	Emergency Stop Switch	Press the EMERGENCY STOP switch at any time to stop all machine functions. Turn switch clockwise to reset.
7	Platform Rotate Switch	Press and hold the Function Enable Switch (#15), then move this switch left to rotate the platform clockwise. Press and hold the Function Enable Switch (#15), then move this switch right to rotate the platform counterclockwise.
8	Platform Level Switch	Press and hold the Function Enable Switch (#15), then move this switch up to manually level the rear of the platform upward. Press and hold the Function Enable Switch (#15), then move this switch down to manually level the rear of the platform downward.
9	Overload Indicator Light	Light ON indicates too much weight on the platform. An audible alarm will sound and all machine function will stop. Remove weight from the platform to restore function and continue. Flashing light indicates previous overload events (Overload event counter). The number of overload events can be accessed through the EZ-Cal. Clearing the event log will stop the flashing light. See page 63 for obtaining overload information and to clear the event log.
10	Tilt Indicator Light	This light illuminates and an alarm sounds when the machine is not level. Follow the instructions in the operator's manual to safely lower the platform.
11	--	--
12	Boom Extend/ Retract	Press and hold the Function Enable Switch (#15), then move this switch right to extend the boom. Press and hold the Function Enable Switch (#15), then move this switch left to retract the boom.
13	Boom Lift/Lower	Press and hold the Function Enable Switch (#15), then move this switch up to lift the boom. Press and hold the Function Enable Switch (#15), then move this switch down to lower the boom.
14	Turntable Rotate	Press and hold the Function Enable Switch (#15), then move this switch left to rotate the turntable clockwise. Press and hold the Function Enable Switch (#15), then move this switch right to rotate the turntable counterclockwise.
15	Function Enable Switch	Press and hold this switch to enable boom, turntable and platform operations. Press down to operate the controls at slow speed. Press up to operate the controls at higher speed.
16	Jib Lift/Lower	Press and hold the Function Enable Switch (#15), then move this switch up to lift the jib. Press and hold the Function Enable Switch (#15), then move this switch down to lower the jib.
17	Circuit Breaker	Trips when there is excessive electrical load. Push to reset.
18	Auxiliary Power Switch	If normal power fails, press and hold while using boom retract and boom lower functions.

Platform Controls

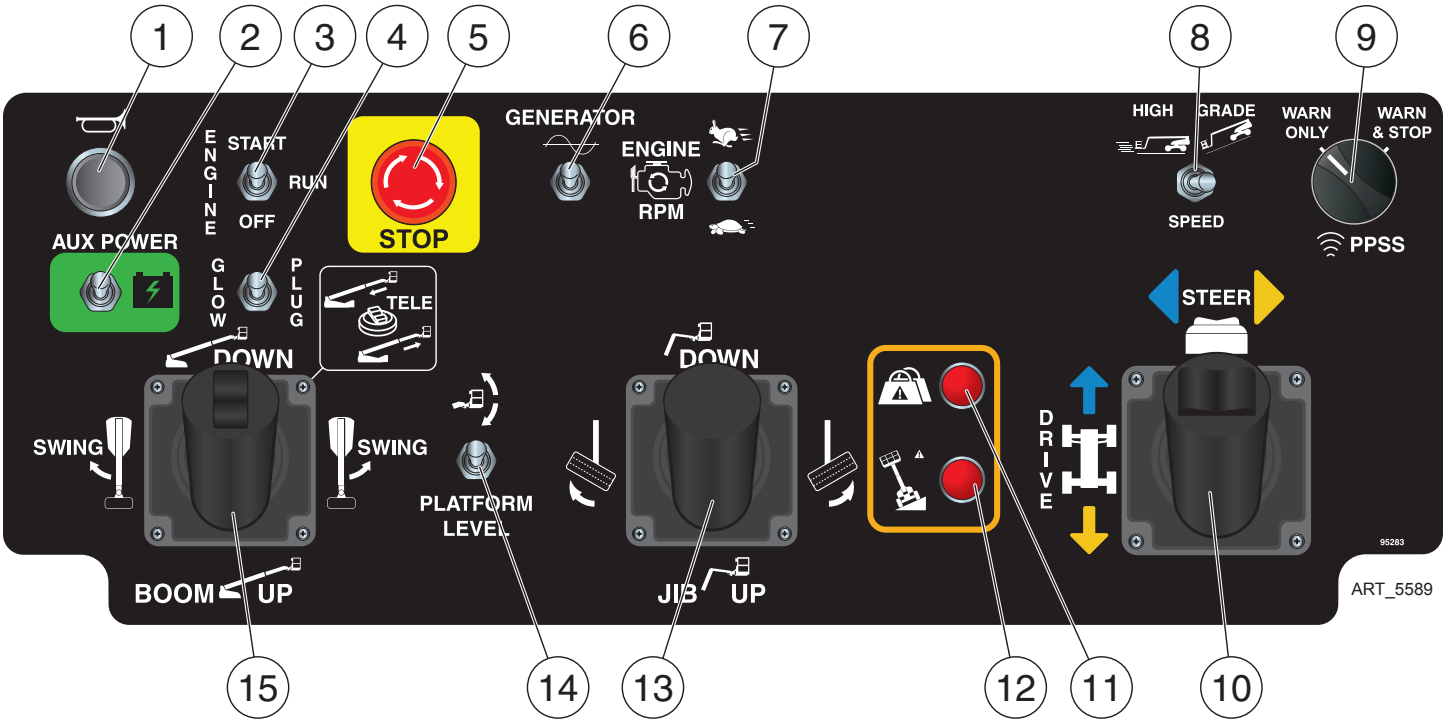

WARNING **ALWAYS check over, under and around the machine for personnel, structures and obstructions before activating any control function and continue to watch for hazards while operating the machine.**

Control		Description
1	Horn Button	Press to sound warning horn.
2	Auxiliary Power	If normal power fails, press and hold while using Boom Retract and Boom Lower functions.
3	Start/Stop Switch	Move this switch up to start engine. Press this switch down to stop engine.
4	Glow Switch	Move this switch up to activate glow plugs prior to cold starting the engine.
5	Emergency Stop Switch	Press the EMERGENCY STOP switch at any time to stop all machine functions. Turn switch clockwise to reset.
6	Generator Switch (Optional)	Turn switch ON to engage optional AC generator. Generator switches off when any other function is enabled.
7	Engine Speed Select Switch	Use this switch to set the engine speed when functions are enabled. Setting this switch to low idle speed allows the operator to move the machine slowly and precisely. Move this switch up for high idle speed and fast function speed. Move this switch down for low idle speed and slow function speed.
8	Speed/Torque Switch	Move this switch to the left for high speed drive. Push this switch to the right for high torque drive.

9	PPSS Switch (Optional)	Warn Only	When the PPSS first senses an object overhead it activates an intermittent audible alarm. The frequency of this alarm increases as the object comes closer to the sensors. Pay careful attention to the object the sensors have detected.
		Warn & Stop	If selected, the machine will stop when the warning alarm becomes continuous. Boom functions that elevate the platform are disabled; drive functions are disabled. Boom functions that lower the platform are allowed.
10	Drive/Steer Control Lever	Depending on the position of the turntable, the machine may move in unexpected directions when the Drive and Steer functions are activated. The color- and shape-coded arrows on the joystick decal correspond to similar arrow decals on the machine chassis. Be sure to check the arrows on the chassis before using the Drive or Steer functions.	
		Drive Function	Depress the enable bar on front of the control lever, then push the control lever forward or backward to drive the machine.
		Steer Function	Depress the enable bar on front of the control lever, then press the thumb switch on top of the control lever to steer left or right.
11	Overload Indicator Light	Light ON indicates too much weight on the platform. An audible alarm will sound and all machine function will stop. Remove weight from the platform to restore function and continue.	
12	Tilt Indicator Light	This light illuminates and an alarm sounds when the machine is not level. Follow the instructions in the operator's manual to safely lower the platform.	
13	Jib/Platform Control Lever	Jib Lift/Lower Function	Depress the enable bar on front of the control lever, then pull the control lever backward to lift the jib. Depress the enable bar on front of the control lever, then push the control lever forward to lower the jib.
		Platform Rotate Function	Depress the enable bar on front of the control lever, then push the control lever right to rotate the platform counterclockwise. Depress the enable bar on front of the control lever, then push the control lever left to rotate the platform clockwise.
14	Platform Level Switch	Press a Function Enable Button to enable this function, then press this switch up to manually level the platform upward or down to manually level the platform downward.	
15	Boom/Turntable Control Lever	Turntable Rotate Function	Depress the enable bar on front of the control lever, then push the control lever to the left to rotate the turntable clockwise or right to rotate the turntable counterclockwise.
		Boom Lift/Lower Function	Depress the enable bar on front of the control lever, then pull the control lever back to elevate the boom. Depress the enable bar on front of the control lever, then push the control lever forward to lower the boom.
		Boom Extend/ Retract Function	Depress the enable bar on front of the control lever, then push the thumb switch on top of control lever back to extend the boom. Depress the enable bar on front of the control lever, then push the thumb switch forward to retract the boom.

Sensors

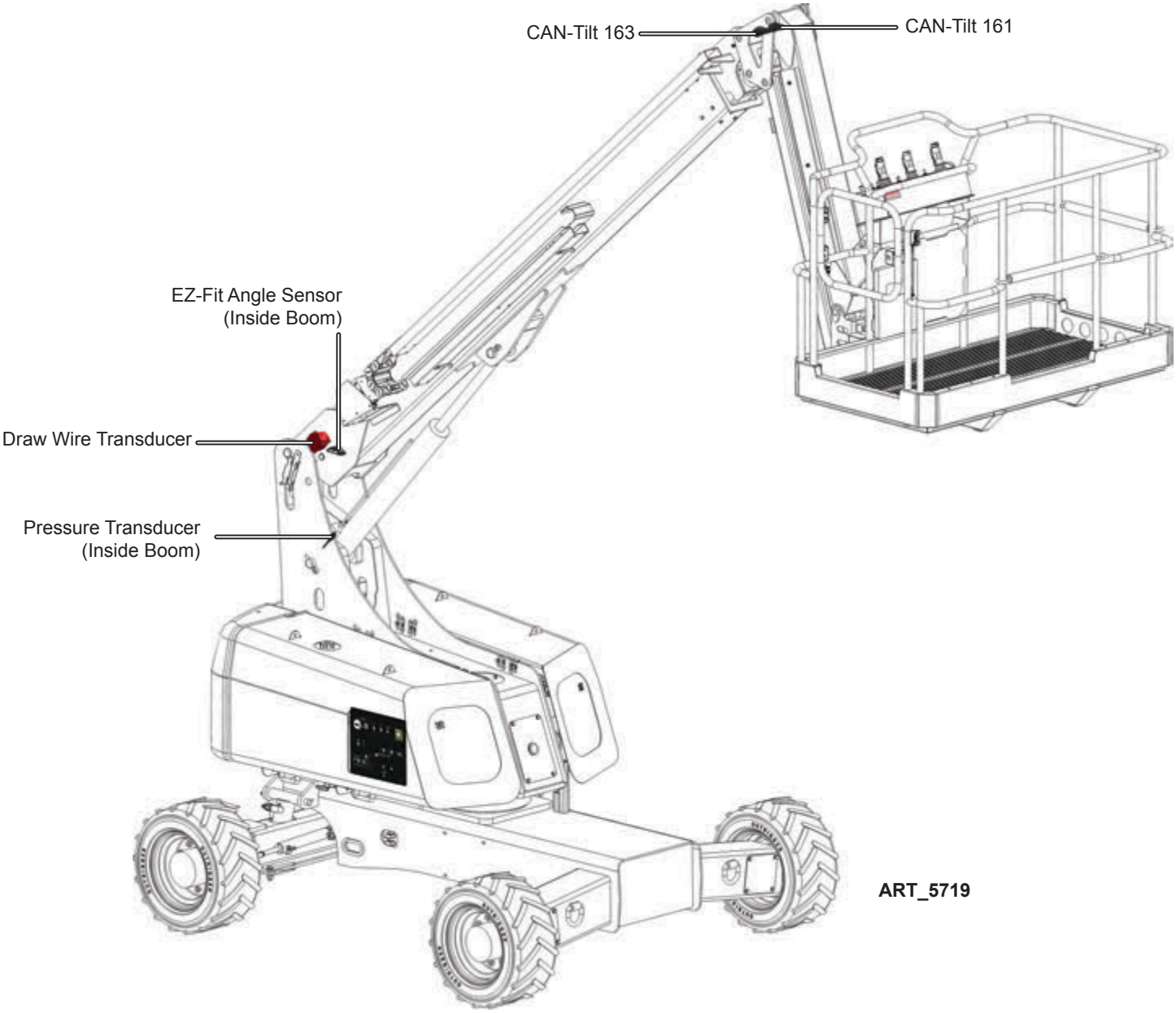

Pressure Transducer

There is one pressure transducer installed onto the lift cylinder. The pressure transducer senses the weight of the platform contents and stops operation of the machine if the platform is overloaded.

Platform Level CAN-Tilt Sensors

There are two CAN-Tilt Sensors located on the Platform Level bell crank. These sensors detect the level state of the platform and communicate with the control system to keep the platform level during boom operation.

CAN-Tilt Angle Transducers **are not** interchangeable. Each is identified by number for communication with the GP500 Module. If removed, be sure that each returns to its original location. If replaced, be sure that the replacement has the same number as the original.

EZfit Angle Sensors

There is one dual EZfit Angle Sensor. It is located at the base of the main boom.

The EZfit Angle Sensor measure the absolute angle of the boom sections relative to level.

Draw Wire Transducer

The draw wire transducer detects the length of the boom. It is used to limit the extension range of the telescopic boom at stowed position.

Relays

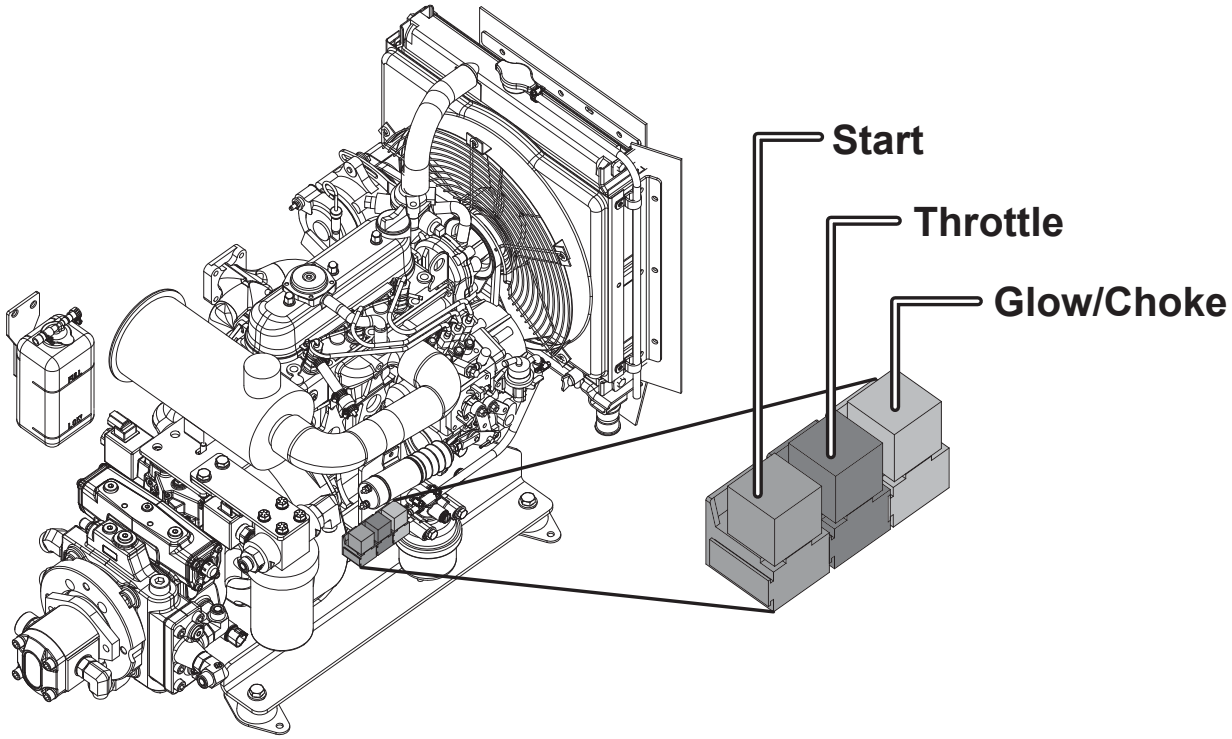

Art_5731

Engine Relays

The Engine Relays are located beside the engine on the rear wall of the Engine Module. These relays reduce the current flow supplied by the GP500 Control Module. Refer to the Section 20 - Schematics for relay functions and interconnect.

Start Relay

Provides power to the starter solenoid.

Glow Plug Relay

Provides power to the diesel engine glow plugs.

Throttle Solenoid Relay

Provides power to the electric throttle solenoid.

Alarms

Tilt Alarm

The Tilt Alarm is a dual-tone alarm that sounds at the Base Controls Box when the angle of the platform is outside of acceptable levels of operation (as measured by the GP500 inside the Base Controls). Alarm sounds only when platform is elevated or boom is extended.

To Correct: Retract and lower the boom until the platform is in the stowed position. Move the machine to a firm level surface before repositioning the platform.

Overload Alarm

The Overload Alarm is a dual-tone alarm that sounds at the Base Controls Box when the control system senses an overload situation. All functions are stopped during Overload condition.

To Correct: Remove weight from the platform before operation can continue.

Alert Sounds

- The Platform Descent Alarm is optional but may be required in certain areas of operation. This alarm sounds from the Base Controls Box.
- The All-Motion Alarm is optional and sounds at the Base Controls Box.
- The Horn is activated by button from the Upper Controls Station and sounds from the Base Controls Box.

Deutsch Connectors

Deutsch connectors used on MEC equipment are designed so that individual parts may be replaced without replacing the entire component. Special tools and detailed instructions are provided in Deutsch Connector field kits, MEC part no. 84091.

Male Plug Connector

- Use the flat end of the Removal Tool or a flat blade screwdriver to pry the locking wedge from the connector, taking care not to damage the Sealing Gasket.
- Inspect and replace damaged parts.
- Replace or re-crimp wires and contacts.

Female Receptacle Connector

- Use the notched end of the removal tool or a wire hook to pull the locking wedge from the connector.
- Replace worn or damaged parts.
- Replace or re-crimp wires and contacts.

Locking Fingers

- Remove the locking wedge as outlined above.
- Using the removal tool or a flat blade screwdriver, push the Locking Fingers aside to release the contact.
- Pull the wire and contact out of the connector.

Heavy Duty Plug

- Slide the removal tool along the wire to be replaced and push into the connector to release the contact.
- Pull the wire and contact out of the plug.

Crimping

- Strip 1/4 in. (6 mm) insulation from the wire.
- Insert the contact into the crimping tool and insert the stripped wire into the contact making sure no wires are outside the contact barrel.
- Close the handles of the crimping tool, then release the handles to remove the crimped contact.

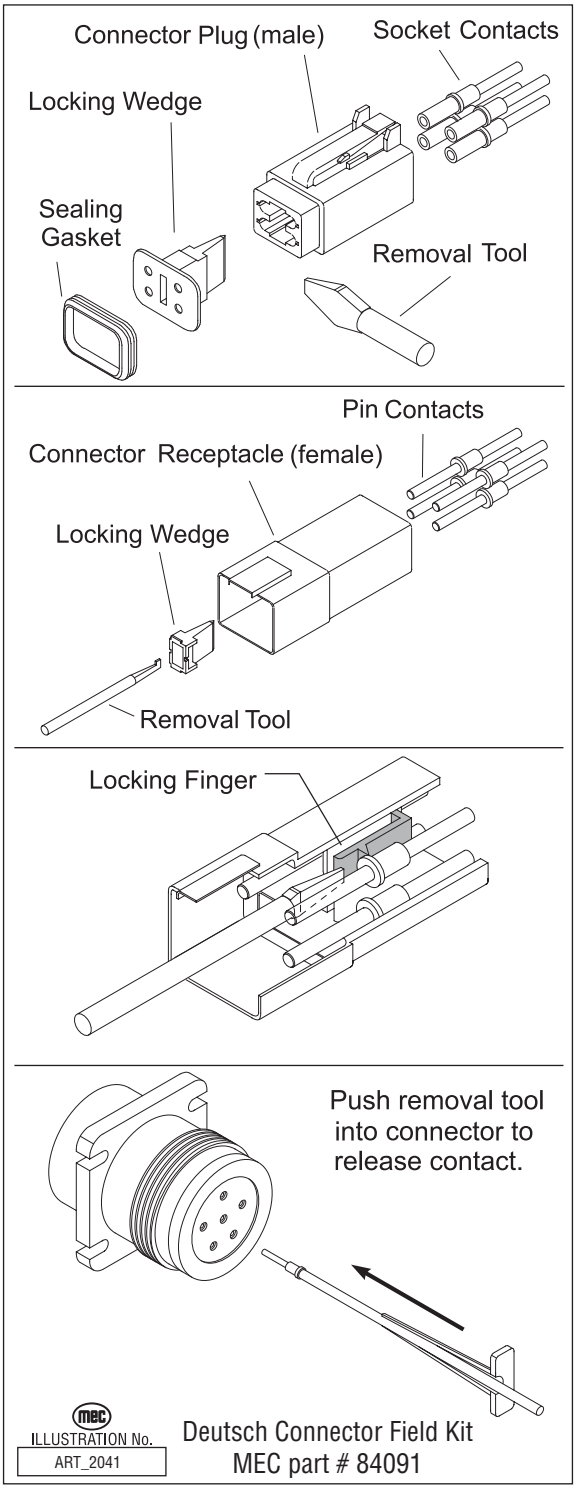

Continuity Checks

Selector Switch – On-Off

- Disconnect wires.
- Connect first probe of ohm meter to common terminal.
- Connect second probe to any normally open terminal.
- With switch OFF (open) there should be no reading.
- With the switch ON (closed) there should be a low resistance reading.
- Repeat for each normally open terminal.

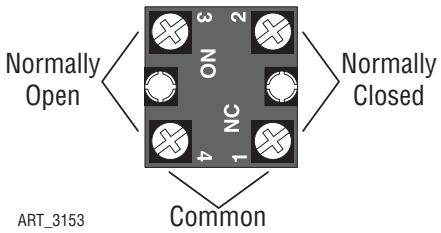

Toggle Switch – On-Off

- Disconnect wires.
- Connect first probe of ohm meter to common terminal.
- Connect second probe to normally open terminal.
- With the switch turned OFF there should be no reading.
- With the switch turned ON there should be a low resistance.

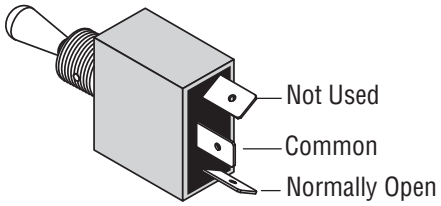

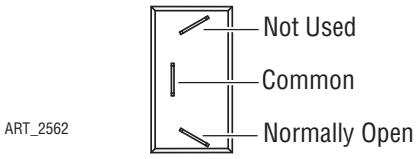

Toggle Switch – 1-Pole 2-Position

- Disconnect wires.
- Connect first probe of ohm meter to common terminal.
- Connect second probe to top normally open terminal.
- With toggle DOWN there should be no reading.
- With the toggle UP there should be a low resistance.
- Move second probe to bottom normally open terminal.
- With toggle UP there should be no reading.
- With the toggle DOWN there should be a low resistance.

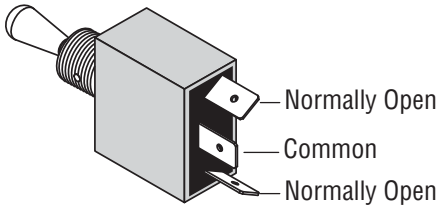

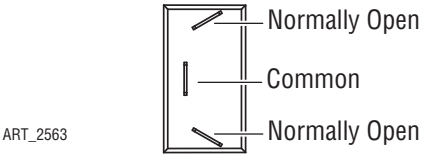

Toggle Switch – 1-Pole 3-Position

- Disconnect wires.
- Connect first probe of ohm meter to common terminal.
- Connect second probe of ohm meter to top terminal.
- With the toggle UP or MIDDLE there should be a low resistance.
- Move second probe to bottom terminal.
- With the toggle DOWN or MIDDLE there should be a low resistance.
- Connect first probe of ohm meter to top terminal.
- Connect second probe of ohm meter to bottom terminal.
- With toggle in ANY POSITION there should be no reading.

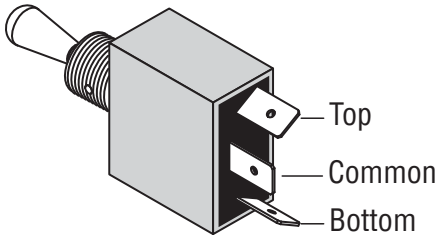

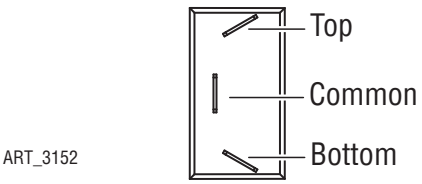

Toggle Momentary Switch

- Disconnect wires.
- Connect first probe of ohm meter to common terminal.

Test top position

- Connect second probe to top normally open terminal.
- With the toggle in the neutral (open) position there should be no reading.
- With the toggle UP (closed) there should be a low resistance.
- With the toggle DOWN (closed) there should be no reading.

Test bottom position

- Move second probe to bottom normally open terminal.
- With the toggle in the neutral (open) position there should be no reading.
- With the toggle DOWN (closed) there should be a low resistance.
- With the toggle UP (closed) there should be no reading.
- Repeat for both rows of two-row switch.

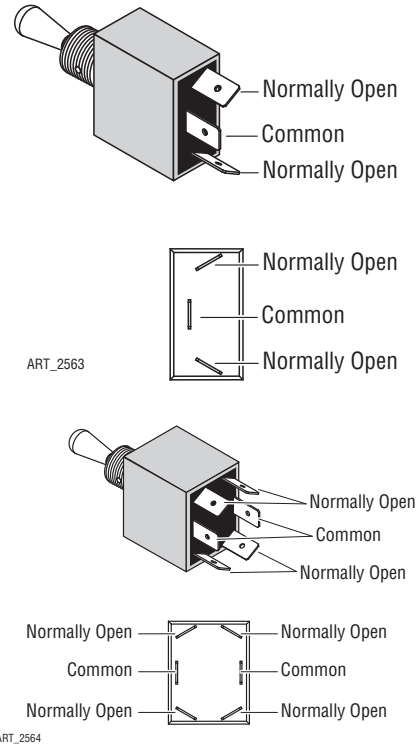

Momentary Button Switch

- Disconnect wires.
- Connect one probe of ohm meter each terminal.
- With the button in the neutral (open) position there should be no reading.
- With the button pushed (closed) there should be a low resistance

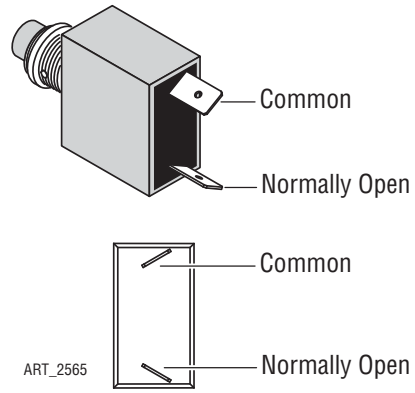

Emergency Stop Button

- Disconnect wires.
- Connect one probe of ohm meter each terminal.
- With the button PRESSED there should be no reading.
- With the button RESET there should be a low resistance.

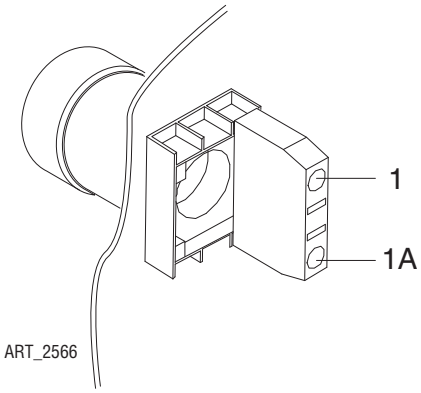

Relay

- With the #85 terminal grounded, apply voltage to #86 terminal connection.
- Confirm normally closed (#87A) contacts are opening. Continuity with #30 will be broken.
- Confirm normally open (#87) contacts are closing. Continuity with #30 will be made.

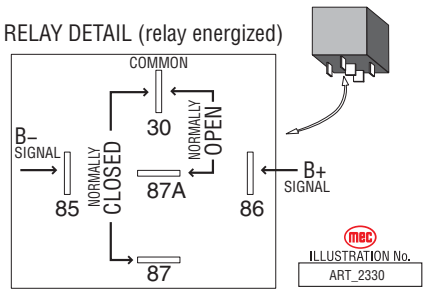

Control System

The GP500 Control System uses a variety of components and sensors to maintain proper and safe operation of the machine. This machine may be sold into many different countries that require a variety of monitoring equipment.

Components & Locations

- GP500 Control Module processor -- Lower Controls Box
- GP440 Module -- Upper Controls Box

Diagnostic information can be found in Section 19 - Troubleshooting.

Wiring information can be found in Section 20 - Schematics.

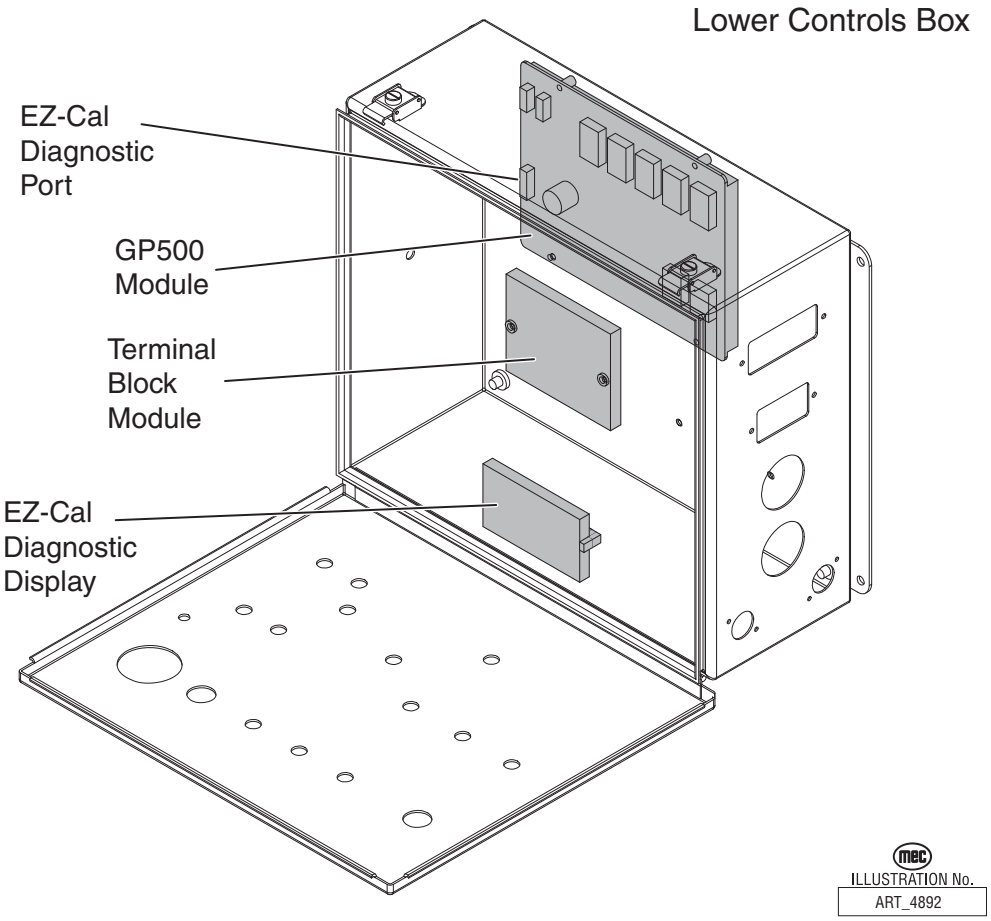

GP500 Calibration

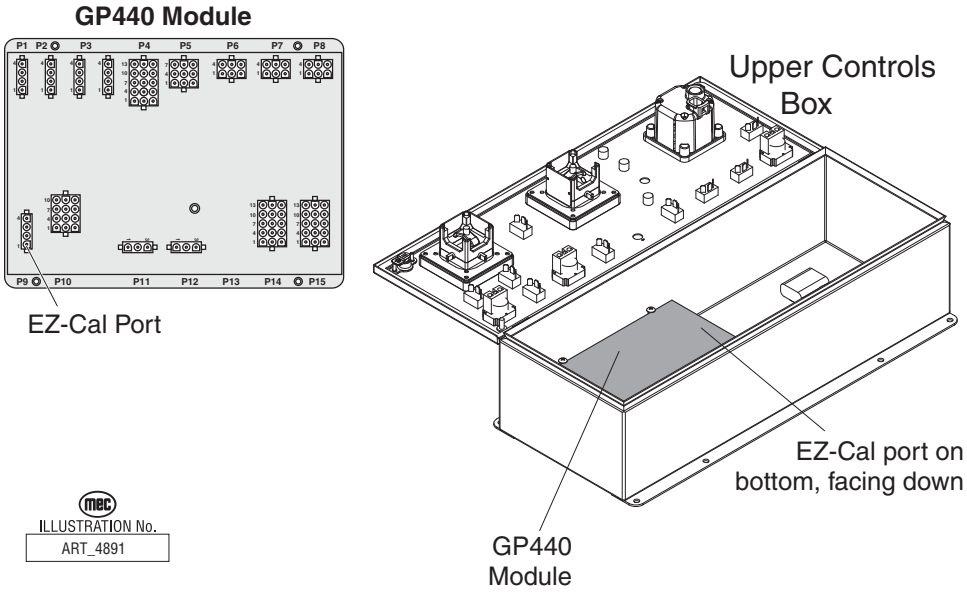

The GP500 processor relies on angle level and extension sensor(s) to monitor platform position at all times. These sensors send varied voltages to the GP500 that relate directly to their respective position. The calibration process is the means by which the GP500 equates these voltages to actual platform elevation.

For example, the Angle Transducer, used to monitor platform elevation, varies its output between 1 and 4 volts through 140 degrees of rotation. During calibration the GP500 may learn that 1.8 volts (fictional number used for explanation) represents the fully lowered position and 3.6 volts represents the fully elevated position and therefore voltages between those figures relate to various heights in between.

All machines are calibrated at the factory and should not require calibration unless the GP500 is replaced, sensors are replaced or it displays a code that alerts to the need to recalibrate.

If the calibration procedure is performed incorrectly or if there is a failure in one of the monitored circuits during the calibration, the GP500 will not allow the operator to continue with the calibration process. An error message will display on the EZ-Cal indicating the reason for the interruption.

Additional details of these error messages can be found at the end of the calibration instructions.

GP500 Calibration Procedure

DANGER

IMPROPER CALIBRATION OF THE CONTROL SYSTEM CAN RESULT IN MACHINE INSTABILITY LEADING TO DEATH OR SERIOUS PERSONAL INJURY. THE FOLLOWING OPERATION MUST BE PERFORMED IN ITS ENTIRETY AS DESCRIBED HEREIN TO PREVENT IMPROPER MACHINE OPERATION.

ONLY TRAINED AND AUTHORIZED PERSONNEL SHALL BE PERMITTED TO CALIBRATE THE PLATFORM OVERLOAD SENSING SYSTEM. READ ALL INSTRUCTIONS CLOSELY BEFORE ATTEMPTING EACH STEP OF THE CALIBRATION PROCEDURE.

In the event of a GP500 replacement, the GP500 must be calibrated before it will operate properly.

The following procedures and additional tasks detailed in Section 19 - Troubleshooting can only be performed using an EZ-Cal scan tool or on-board diagnostic display. If you do not have an EZ-Cal, please contact MEC to obtain one.

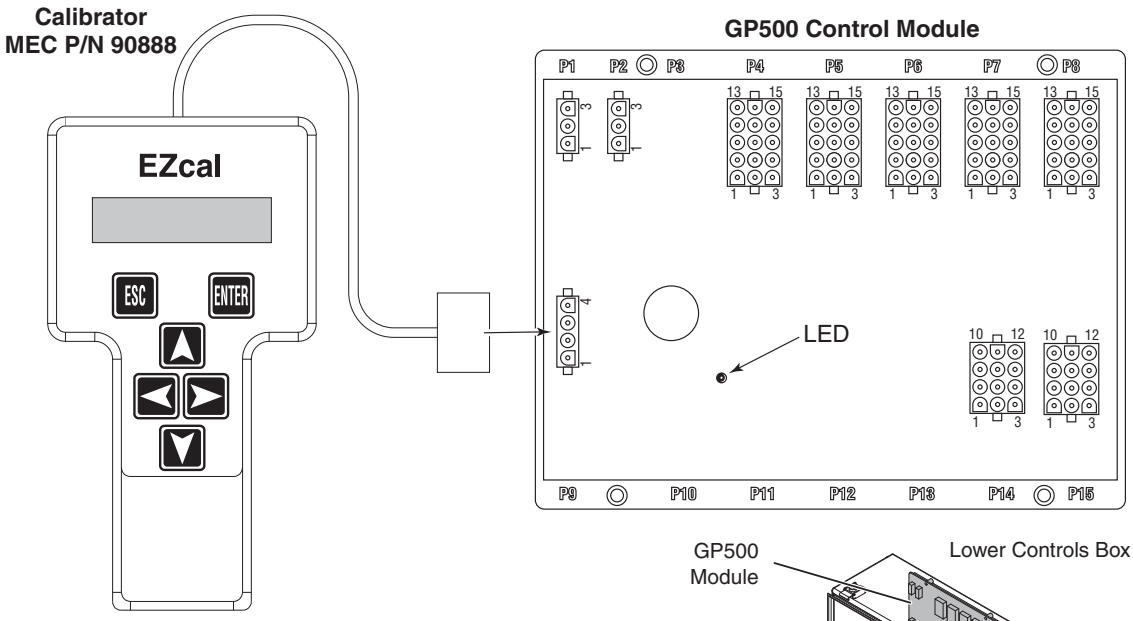

SYMBOL	KEY FUNCTIONS
ESC ENTER	**ESC/ENTER BUTTONS** To move back and forth between menu and sub-menu
◀ ▶	**LEFT/RIGHT BUTTONS** Select menus and setting to be adjusted
▲ ▼	**UP/DOWN BUTTONS** Adjust setting values

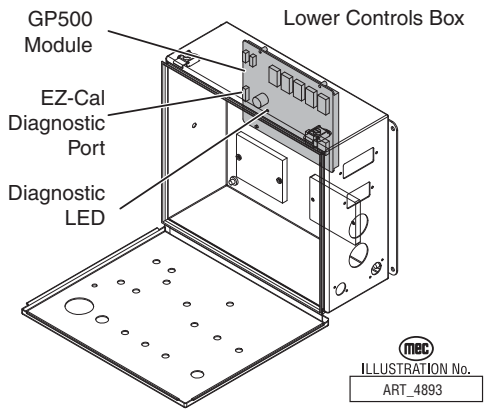

Four calibrations must be performed for all versions of this machine:

1. Level Sensor Calibration
2. Height Sensor Calibration
3. Load Calibration
4. Extension

Pre-Calibration Setup

Park the machine on an absolute flat and level surface free from overhead obstructions that will prevent full boom elevation and extension. Lower and retract the boom completely into its cradle.

Level Sensors calibration must be performed first. When calibrating the level sensors, be aware that the following sensors are all calibrated simultaneously:

- GP500 Control Module's Integral Level Sensor that measures chassis angles
- Two dual-axis CAN-Tilt Angle Transducers that measure platform angle; both mounted at the front of the Platform Level Bell Crank.

Therefore, before calibration can begin:

- Use a framers/spirit level to check the chassis is level both fore-and-aft and side-to-side.
- The PLATFORM must be leveled both fore-and-aft and side-to-side through the use of a framers/spirit level placed on the top or bottom side of the platform toe boards. Use the Platform Level toggle function to level the platform fore-and-aft.

After the chassis and platform has been confirmed to be absolutely level, proceed to the Level Sensors Calibration instructions.

The sensors used on the this machine are very sensitive and can detect even the slightest movement of the parts that they monitor. Therefore it is it is absolutely mandatory that the previous steps be performed with utmost care and precision before calibration.

Level Sensors Calibration

1. Park machine on flat level surface and ensure that the chassis, the steering axle and the platform are level, as described in Pre-Calibration Setup. Turn the engine off using the Start/Stop toggle switch.
2. Open the control module door, then open the lower control box door to access the GP500. Connect the EZ-Cal or use the on-board diagnostic.
3. Power up the control system by turning the Key Switch on the lower controls to Base. The EZ-Cal display will read HELP PRESS ENTER.
4. Press the right arrow twice until the display reads, "ACCESS LEVEL 3". Press ENTER
5. Using the up arrow and right arrow, enter the numbers 1775, then press ENTER. The display should now read "ACCESS LEVEL 2"
6. Press the right arrow twice until the display reads "SETUPS". Press ENTER.
7. Press the right arrow once until the display reads "TILT SETUPS". Press ENTER.
8. The display will read "CALIBRATE LEVEL YES: ENTER NO: ESC"
9. Press ENTER, then press ENTER again. The State-of-Level indicator should now read 0.0 - 0.0 or within .1 degrees.

Level calibration is complete. Proceed to Height Calibration.

Height Sensor Calibration

1. If not already done, perform Pre-Calibration Set-up as described in the beginning of these instructions and the Level Sensors Calibration before proceeding.
2. With the EZ-Cal menu remaining in the Level Calibration, press ESC once until the display reads" TILT SETUPS" or to start from the beginning follow steps 1 - 6 above of the Level Sensors Calibration procedure.
3. Press the right arrow until the display reads "HEIGHT SETUPS" and press ENTER.

4. Press the right arrow once until the display reads “CALIBRATE HEIGHT”. Press ENTER. You will be asked if the boom is fully lowered. Press ENTER when it is.
5. Follow the instructions on the display exactly and operate lift and lower only when the display instructs to do so. DO NOT interrupt lifting or lowering during calibration, as doing so will result in a bad calibration or possible fault. You will be instructed to operate Boom Up to full elevation then back down to fully stowed position. When the boom reaches full elevation and stops you must release the toggle switch before the calibration instructions can continue. This is also true when the boom reaches full stowed position. You will not be instructed to release the toggle switch.
6. After following the EZ-Cal instructions and Height Calibration is complete, you will be prompted to enter the calibration date. Use the up arrow and right arrow to enter the day’s date (MM/DD/YY).
7. Once the CAL DATE has been entered, calibration is complete. Press ESC 3 times and/or turn off the machine.

Height calibration is complete. Proceed to Extension Calibration.

Extension Sensor Calibration

1. If not already done, perform Pre-Calibration Set-up as described in the beginning of these instructions and the Level Sensors and Height Sensor Calibrations before proceeding with Extension Sensor Calibration. **ELEVATE PLATFORM TO 45°!**
2. Access the EZ-Cal by opening the Control Module door, then opening the Lower Control Box door. Attached to the Lower Control Box Door is an EZ-Cal interface display which will be used to perform the calibration.
3. Power up the control system. The EZ-Cal display will read HELP PRESS ENTER.
4. Press the right arrow twice until the display reads, “ACCESS LEVEL 3”.
5. Using the up arrow and right arrow, enter the numbers 1775 then press ENTER. The display should now read “ACCESS LEVEL 2”
6. Press the right arrow twice until the display reads “SETUPS”. Press ENTER.
7. Press the right arrow three times until the display reads “EXTENSION SETUPS”. Press ENTER.
8. Now the EZ-Cal will display CALIBRATE EXTENSION. Press ENTER.
9. Follow the instructions on the display exactly and operate extend and retract only when the display instructs to do so. You will be instructed to operate Boom Extend to full extension then back to the fully retracted position. When the boom reaches full extension and stops you must release the toggle switch before the calibration instructions can continue. This is also true when the boom reaches the fully retracted position. You will not be instructed to release the toggle switch.
10. After following the EZ-Cal instructions and Extension Calibration is complete, you will be prompted to enter the calibration date. Use the up arrow and right arrow to enter the day’s date (MM/DD/YY). Once the CAL DATE has been entered, calibration is complete, press ESC 3 times and/or turn off the machine.

Extension calibration is complete.

Perform the previous calibration procedures before performing the following:

Overload Pre-Calibration Instruction

1. Site and Machine Preparation:
   1) Park the machine on firm level ground.
   2) During the Calibration process, the boom must reach full height and 60% horizontal

extension so the site must be free of overhead and forward obstructions.
3) Lower the boom completely and lower the Jib to the ground. It may be necessary to raise the Jib slightly to ensure full boom retraction.
4) Turn the Key Switch to the Lower Controls position and start the engine.
5) Use the On-board Diagnostic unit or a hand-held EZ-Cal tool for the procedure. Both will be referred to as “EZ-Cal” in this section.

2. Before proceeding to LOAD Calibrations, make sure TILT, HEIGHT, and LENGTH calibrations have been completed, See preceding pages in this chapter for instructions.
3. Check the software revision number and date for correct software revision.
   1) Press the Right arrow for DIAGNOSTICS, press Enter. Press right arrow for LOG, press Enter. Press right arrow for SOFTWARE – it should read (21350488_20200804)
   - **Note:** *“20200804” is August 4th of 2020, software dated after that date is acceptable.*

Overload Calibration

Note: If any of the following steps are interrupted with an “F” code, refer to the F-code chart, later in this section, for troubleshooting the reason for the fault.

1. Enter Access Level 1.
   1) Using the EZ-Cal, press ESC 3 times. Press the Right Arrow for “Access level 3” and press Enter. Using the Up Arrow to increase digit and the right arrow to move the cursor, enter Access Code 2654 and press Enter. The Display will read “ACCESS LEVEL 1”.
2. Change Height Settings and ensure Load settings
   1) While in Access Level 1, press ESC 3 times. Press the Right Arrow for “SETUPS” and press Enter. Press the Right Arrow for “HEIGHT SETUPS” and press Enter. Press the Right Arrow for “MAX LIFT” and using the Up arrow, change to 100%.
   2) Press the Right Arrow for “HEIGHT OVERLOAD” and change to 1%.
   3) Press ESC 2 times. Press the Right Arrow for “LOAD SETUPS” and press Enter. Press the Right Arrow for “CELLS”. Change to “0”, If not already.
   4) Press the Right Arrow for “MIN LIFT” and change to “4 SEC” if not already.
3. Extend boom out to full extension while stowed (boom extension will stop at 60% in stowed position)
4. Load the Platform with 550 lb of weight. Weight should be centered in platform as practical.
5. Lift the jib to horizontal position, so boom sections (main and jib) are in-line.
6. Calibrate Load
   1) With the EZ-Cal displaying as left in step 5, Press the Right Arrow for “CALIBRATE LOAD” and press Enter.
   2) The EZ-Cal will display, “PLATFORM DOWN?” (If the Main Boom is not fully lowered then lower the Main Boom completely (height = 0%). Press Enter.
7. Dynamic Load Calibration
   1) When the EZ-Cal displays “REDO DYNAMIC NO”, press the UP arrow once to change NO to YES and press ENTER.
   2) When the EZ-Cal displays “PLEASE LIFT”, press the Enable Toggle up to the Rabbit position (high throttle) while also operating the Boom Lift and Boom Extend toggle switches simultaneously to lift and telescope boom to full cylinder stroke. Once to full stroke, release switches.
   3) When the EZ-Cal displays “PLEASE LOWER”, press the Enable Toggle up to the Rabbit position (high throttle) while also operating the Boom Down toggle simultaneously until the boom reaches the fully stowed position. Release switches once the boom is fully lowered.
   - **Note:** *The boom will automatically retract before the boom starts to lower.*

8. Loaded Load Calibration
   1) The EZ-Cal will display 'REDO LOADED NO' press the UP arrow once to change NO to YES and press ENTER.
   2) When the EZ-Cal displays "PLEASE LIFT", press the Enable Toggle up to the Rabbit position (high throttle) while also operating the Boom Lift and Boom Extend toggle switches simultaneously to lift and telescope boom to full cylinder stroke. Once to full stroke, release switches.
   - **Note:** *The boom will lift and stop repeatedly until it reaches full elevation, do not release switches until fully elevated.*
   3) When the EZ-Cal displays "PLEASE LOWER", press the Enable Toggle up to the Rabbit position (high throttle) while also operating the Boom Down toggle simultaneously until the boom reaches the fully stowed position. Release switches once the boom is fully lowered.
   - **Note:** *The boom will automatically retract before the boom starts to lower.*
9. Empty Load Calibration
   1. Press ESC once then, fully retract the Boom. Do not lower the jib and do not remove the weight from the platform. Do not turn machine off.
   2. The EZ-Cal should display "CALIBRATE LOAD" press Enter. The EZ-Cal will display "REDO DYNAMIC NO", press Enter.
   3. The EZ-Cal will display "REDO LOADED NO", press enter.
   4. The EZ-Cal will display "REDO EMPTY NO", press the UP arrow once to change NO to YES and press ENTER.
   5. When the EZ-Cal displays "PLEASE LIFT", press the Enable Toggle up to the Rabbit position (high throttle) while also operating the Boom Lift and Boom Extend toggle switches simultaneously to lift and telescope boom to full cylinder stroke. Once to full stroke, release switches.
   - **Note:** *The boom will lift and stop repeatedly until it reaches full elevation, do not release switches until fully elevated.*
   6. When the EZ-Cal displays "PLEASE LOWER", press the Enable Toggle up to the Rabbit position (high throttle) while also operating the Boom Down toggle simultaneously until the boom reaches the fully stowed position. Release switches. Release toggle switches once the boom is fully lowered.
   - **Note:** *The boom will automatically retract before the boom starts to lower.*
   7. The EZ-Cal screen will display "ENTER CAL DATE _ _ / _ _ / _ _" Using the UP and RIGHT arrows, to enter the date, MM/DD/YY, then press ENTER. The EZ-Cal will display "FINISHED". Do not turn power off yet.
10. Change Height Settings back to original.
    1) While in Access Level 1, press ESC 3 times. Press the Right Arrow for "SETUPS" and press Enter. Press the Right Arrow for "HEIGHT SETUPS" and press Enter. Press the Right Arrow for "MAX LIFT" and using the Down arrow, change to 94%.
    2) Press the Right Arrow for "HEIGHT OVERLOAD" and change to 10%. Turn power off.

Overload Calibration is complete.

Failure Messages

Various problems can be detected by the EZ-Cal that prevent successful calibration. These problems are reported with a flashing message including an “F” code. The following descriptions are helpful in solving the problem. References in parentheses refer to electrical schematic points.

F01:CANNOT RUN

- There is a shut-down fault on the controller. “EVERYTHING OK” does not show up when you try to calibrate.
- Check HELP message for more information.

F02:NOT GROUND MODE

- This message is given if the base/platform selector switch is not in ground mode (P7-2 must be high). Calibration can only be carried out in ground mode.

F03:NOT STOPPED

- This message is given if any function switch is closed. Check DIAGNOSTICS / SWITCHES to see which function switch is closed.

F04:TILTED

- This message is given if the machine is tilted. Calibration must be carried out with the machine level. If the machine is level, perform the Level Sensors Calibration procedure above.

F05:BAD HEIGHT

- This message is given if the height sensor output (P8-2 and P8-6) is out of range at the start of calibration. The height sensor output must be between 1.0V and 4.0V. Check DIAGNOSTICS / SENSORS to see the output. A reading of 0V or 5V is probably due to a wiring problem.

F06:CHECK ELEV

- This message is given if the elevation switch (P7-5) is open at the start of calibration, when the operator has confirmed the “PLATFORM DOWN?” question.

F07:BAD HEIGHTS

- The two Height Sensors are not in agreement at the end of Height Calibration.

F08:CHECK ELEV

- This message is given if the elevation switch (P7-5) is closed at the end of the DYNAMIC lift, when the platform should be fully raised.
- This message would occur if the UP switch was accidentally opened near the start of the DYNAMIC lift.
- If the platform is fully raised, check the elevation switch wiring.

F09:BAD HEIGHT1
F09:BAD HEIGHT2

- This message is given if the height sensor output (P8-2) is out of range at the start of the DYNAMIC lift. The height sensor output must be between 1.0V and 4.0V. Check DIAGNOSTICS / SYSTEM (2a-7) to see the output. This is usually due to a wiring problem.

F10:BAD HEIGHT1
F10:BAD HEIGHT2

- This message is given if the height sensor output (P8-2) is out of range at the end of the DYNAMIC lift. The height sensor output must be between 1.0V and 4.0V. Check DIAGNOSTICS/ SENSORS to see the output. A reading of 0V or 5V is probably due to a wiring problem.

F11:NOT UP
F11:NOT DOWN

- This message occurs at the start of the DYNAMIC lift if the operator selects a function other than UP.

F12:TOO MANY

- This message occurs if the DYNAMIC lift takes too long.
- This message could occur if the UP switch was not released at the end of the dynamic lift.

F13:LOW HEIGHT RANGE

- This message occurs at the end of the DYNAMIC lift if the height sensor output did not change sufficiently to give a reasonably accurate platform height estimate. DIAGNOSTICS / ANALOGS can be used to check the height sensor output (P8-2) when the platform is fully lowered and fully raised; a difference of at least 1V is to be expected.
- This message could occur if the UP switch was accidentally opened too early (when the platform is not fully raised).

F14:BAD HEIGHT1

- This message occurs if EZfit#1 output is out of range during the DYNAMIC lift. The height sensor output must be between 1.0V and 4.0V. Check DIAGNOSTICS / SENSORS to see the output. A reading of 0V or 5V is probably due to a wiring problem.

F15:CHECK ELEV

- This message is given if the elevation switch (P7-5) is open when the platform has been fully lowered after the DYNAMIC lift.
- This message would occur if the DOWN switch was accidentally opened before the platform was fully lowered.
- If the platform is fully lowered, check the elevation switch. Check that the boom is fully retracted.

F16:LOW ELEV.OPEN

- This message is given if the elevation switch (P7-5) opened during lift at too low of a height (below 5%). Check CALIBRATIONS / HEIGHT CALS. The “ElevUp” value shows the recorded height where the switch opened. Check that the boom is fully retracted.

F17:HIGH ELEV.OPEN

- This message is given if the elevation switch (P7-5) opened during lift at a too high height (above 25%).
- Check CALIBRATIONS / HEIGHT CALS; the “ElevUp” value shows the recorded height where the switch opened. Check that the boom is fully retracted.

F18:LOW ELEV.CLOSE

- This message is given if the elevation switch (P7-5) closed during lower at a too low height (below 5%).
- Check CALIBRATIONS / HEIGHT CALS; the “ElevDown” value shows the recorded height

where the switch opened. Check that the boom is fully retracted.

F19:HIGH ELEV.CLOSE

- This message is given if the elevation switch (P7-5) closed during lower at a too high height (above 25%).
- Check CALIBRATIONS / HEIGHT CALS; the “ElevUp” value shows the recorded height where the switch opened. Check that the boom is fully retracted.

F20:HEIGHT1<>0%
F20:HEIGHT2<>0%

- This message occurs if the platform height is not 0% after the platform has been fully lowered at the end of a calibration step. The platform must return to the same height each time it is fully lowered.
- Check DIAGOSTICS / SYSTEM to check the height.

F22:HEIGHT1<>100%
F22:HEIGHT2<>100%

- This message occurs if the platform height is not 100% after the platform has been fully raised during a calibration step. The platform must return to the same height each time it is fully raised. Check DIAGNOSTICS / SYSTEM to check the height.

F24:TOO MANY

- This message occurs if too many static measurements are taken during a calibration step.
- In the rare event that this occurs, please call MEC for assistance.

F27:BAD HEIGHT

- This message indicates a problem with the height sensor output (P8-2) during the STATIC calibration phases.
- The height sensor output must be between 1.0V and 4.0V at all times.
- Check DIAGNOSTICS / SENSORS to see the output. A reading of 0V or 5V is probably due to a wiring problem.

F30:BAD HEIGHTS

- This message indicates that the recorded heights are not increasing during STATIC lift, or are not decreasing during STATIC lower.
- This problem may be caused by repeatedly opening and closing the UP or DOWN switch during the STATIC phases.

F34:REJECT CURVE

- The DYNAMIC pressure curve is unacceptable.
- There is not enough difference between the initial pressure peak and the minimum pressure.
- Check for proper weight in the platform and check pressure sensor and lift cylinder hydraulics.

F40:REJECT DELTA DOWN @
F40:REJECT DELTA UP @

- This message indicates that there is not enough difference between the loaded & empty pressure.
- This message could occur if the platform were not properly loaded during the STATIC LOADED phase, or if the platform were not properly empty during the STATIC EMPTY phase.
- This message could also occur if the wrong pressure sensor was fitted (e.g.: a 5000psi sensor

when a 3000psi one is needed).
- Check CALIBRATIONS / HEIGHT CALS; the “Height” indicates the first height at which there was insufficient difference and the “Up” and “Down” values show the loaded pressure (first) and the difference between loaded and empty pressure (second).

F42:LOW PRESSURE
- This message indicates that the pressure is too low (0.5V or less) when the elevation switch opens during the DYNAMIC lift.
- This message would occur if the pressure sensor was disconnected, or if there were some other wiring error.
- Check DIAGNOSTICS / SENSORS to check the pressure.

F43:HIGH PRESSURE
- This message indicates that the pressure is too high (4.5V or more) when the elevation switch opens during the DYNAMIC lift.
- This message would occur if the wrong pressure sensor was fitted, or if there were some other wiring error.
- Check DIAGNOSTICS / SENSORS to check the pressure.

F44:LOW PRESSURE
- This message indicates that the pressure is too low (0.5V or less) at a STATIC measurement point.
- This message would occur if the pressure sensor was disconnected, or if there were some other wiring error.
- Check DIAGNOSTICS / SENSORS to check the pressure.

F45:HIGH PRESSURE
- This message indicates that the pressure is too high (4.5V or more) at a STATIC measurement point.
- This message would occur if the wrong pressure sensor was fitted, or if there were some other wiring error.
- Check DIAGNOSTICS / SENSORS to check the pressure.

F46:CHECK ELEV
- This message indicates that the elevation switch opened more than once during the DYNAMIC lift.

F47:CHECK ELEV
- This message indicates that the elevation switch closed more than once during the DYNAMIC lower.

F48:BAD PRESSURE
- This message is given if the pressure sensor output is out of range at the start of calibration.
- The sensor output must be between 0.5V and 4.5V.
- Check DIAGNOSTICS / SENSORS to see the output. A reading of 0V or 5V is probably due to a wiring problem.

F49:TOO FEW
- The minimum number of static calibration points was not achieved.

F52:NOT CALIBRATED

- This message is a catch-all code which indicates an improper calibration sequence or that one of the phases of calibration was not completed. The skipped phase must be completed or the calibration sequence must be passed through in proper sequence before this message will clear. Re-start the calibration sequence and proceed through each sequence in the specified order.
- A “Redo” prompt will appear before each sequence. Answer “NO” if there is no reason to repeat or “YES” if the phase must be completed.

F60:BAD EXTENSION

- Extension has not been calibrated or is faulty at the start of Load Calibration.

F61:BAD EXTENSION

- Extension is out of range at the start of Extension Calibration.

F62:BAD EXTENSION

- Extension is out of range at the start of Extension Calibration.

F63:BAD EXTENSION

- Extension is out of range at the end of Extension Calibration.

F64:BAD EXTENSION

- Problem at the end of Extension Calibration -- not enough difference between start and end points

F65:BAD EXTENSION

- Use Boom Extend function to calibrate extension.

Information Messages

During calibration the following messages will be displayed. They are informational prompts only and do not indicate a failure.

BUILDING TABLES
- This message indicates that the STATIC measurements are being used to build calibration data - the process should take no more than 5s.

CALDATE:
- This message is prompting for the date to be entered; it is stored to identify when the machine was calibrated.
- The last calibrate date can be viewed in DIAGNOSTICS / LOG.
- Press LEFT & RIGHT to select the flashing digits.
- Press UP & DOWN to change the flashing digits.
- Press ENTER when the entry is complete.
- IMPORTANT: The date 00/00/00 is not allowed!

FINISHED
- This message confirms that calibration is complete and successful.

GO DOWN MORE!
- This message occurs if the DOWN switch is released during either STATIC lowering phase, when more measurements are needed (before the platform is fully lowered).

GO UP MORE!
- This message occurs if the UP switch is released during either STATIC lifting phase, when more measurements are needed (before the platform is fully raised).

LIFT EMPTY
- This message is displayed during the STATIC empty phase while the platform is being raised to the next measurement height.

LIFT LOADED
- This message is displayed during the STATIC loaded phase while the platform is being raised to the next measurement height.

LIFTING
- This message is displayed during the DYNAMIC phase while the platform is being raised.

LOWER EMPTY
- This message is displayed during the STATIC empty phase while the platform is being lowered to the next measurement height.

LOWER LOADED
- This message is displayed during the STATIC loaded phase while the platform is being lowered to the next measurement height.

LOWERING
- This message is displayed during the DYNAMIC phase while the platform is being lowered.

MEASURING #
- This message is displayed when the platform is stopped during either STATIC phase, when the GP500 takes a measurement.
- There will be a short delay while the machine is allowed to stabilize after movement is stopped.

MUST GO DOWN!
- This message occurs if the wrong switch is operated when the GP500 is waiting for the platform to be lowered.

MUST GO UP!
- This message occurs if the wrong switch is operated when the GP500 is waiting for the platform to be raised.

PLATFORM DOWN?
- This message is prompting for confirmation that the platform is fully lowered. If necessary the DOWN switch can be activated to lower the platform.
- Press ENTER to confirm when the platform is fully lowered.

PLATFORM EMPTY?
- This message is prompting for confirmation that the platform is completely empty.
- Press ENTER to confirm when the platform is empty.

PLATFORM LOADED?
- This message is prompting for confirmation that the platform is loaded to rated load: For the standard version of this machine, this is 500 lbs (227 kg). Option-equipped machines may be rated for 600 lbs (272 kg) or 750 lbs (340 kg). See machine's the serial plate for platform capacity.
- Press ENTER to confirm when the platform is loaded.

PLEASE LIFT …
- This message is prompting for the platform to be raised.
- The UP switch should be operated.

PLEASE LOWER …
- This message is prompting for the platform to be lowered.
- The DOWN switch should be operated.

PLEASE WAIT
- This message indicates that the is busy; the delay will be short (no more than 5s).

REDO DYNAMIC:
- This message is displayed if the DYNAMIC phase of load calibration has previously been completed.
- Press ENTER when "NO" is displayed if there is no need to redo the DYNAMIC phase.
- Press UP or DOWN to display "YES" then press ENTER if it is necessary to redo the
- DYNAMIC phase.
- If the previous DYNAMIC calibration was in error, or if the height or pressure sensor is replaced, it will be necessary to redo the DYNAMIC phase.

REDO EMPTY:

- This message is displayed if the EMPTY phase of load calibration has previously been completed.
- Press ENTER when “NO” is displayed if there is no need to redo the EMPTY phase.
- Press UP or DOWN to display “YES” then press ENTER if it is necessary to redo the
- EMPTY phase.
- If the previous EMPTY calibration was in error, or if the pressure sensor is replaced, it will be necessary to redo the EMPTY phase.

REDO LOADED:

- This message is displayed if the LOADED phase of load calibration has previously been completed.
- Press ENTER when “NO” is displayed if there is no need to redo the LOADED phase.
- Press UP or DOWN to display “YES” then press ENTER if it is necessary to redo the
- LOADED phase.
- If the previous LOADED calibration was in error, or if the pressure sensor is replaced, it will be necessary to redo the LOADED phase.

TOTAL DATA:

- This message is displayed at the end of each phase, to confirm the number of measurements recorded by the GP500. No operator input is required during this process.

Overload Event Counter Reset

The Overload Event Counter indicates the number of times that the platform has been emergency lowered during an overload event. MEC Aerials uses the Start Disable Light, located on the lower control panel, and the Overload Indicator light in the upper control station to flash after the emergency Lower operation was activated during an overload event. If the overload indicator and the Start Disable lights are flashing, the number of events must be documented for future reference according to the standard.

Follow these instructions to access the Overload Event Counter and to reset the counter. Once cleared, the lights will turn off. Reviewing and resetting the Overload Event Counter is **not** covered under MEC warranty terms.

Instructions:

1. Open the Control Module door and open the door of the lower control box.
2. If the machine is equipped with an On-board Diagnostic Display (ODD), go to step 3. If not equipped with ODD, an EZ-cal Scan Tool (part # 90888) will be necessary to complete this procedure. Plug the EZ-cal into the P9 plug of the GP400 module located inside the lower control box, mounted to the back. P9 is the 4-pin plug on the lower left corner of the GP400 Module.
3. When the EZ-cal or ODD is powered up, press the Right arrow until you see ACCESS LEVEL 3. Press ENTER.
4. Using Up/Down arrows enter Access Code 1775. Press ENTER. The display should read “ACCESS LEVEL 2”.
5. Press the Left arrow until you see DIAGNOSTICS. Press ENTER.
6. Press the Left arrow until you see LOG. Press ENTER.
7. Press the Left arrow until you see ERASE OL OVERIDE. Press ENTER.
8. The number of events will be displayed.
9. To clear the counter, press ENTER.
10. Once ENTER is pressed, it will show you that OL OVERRIDE counter is 0 and the lights will be off.
11. Un-plug the EZ-cal Scan Tool if used.
12. Close and secure the Lower Control Box door and close and secure the control Cabinet door.

Mechanical Components

This section describes the major components of the machine and the steps required to service them.

Base

CAUTION **When steam cleaning or pressure washing the base/undercarriage, cover electrical components to prevent water penetration.**

Steam clean the base as necessary, and inspect all welds and brackets. Check for cylinder pins that have turned in their mounting, which may indicate sheared retaining pins.

Tires & Wheels

Inspect for cuts, chunking, side-wall damage, or abnormal wear. Any tire faults **MUST BE CORRECTED** before further machine operation. Refer to Parts sections for replacement tires.

DANGER

FAILURE TO USE APPROVED PARTS MAY CAUSE DEATH OR SERIOUS PERSONAL INJURY.

REPLACE TIRES WITH THE CORRECT TIRES TO MAINTAIN THE RATING OF THE EQUIPMENT.

ON MACHINES WHERE FOAM FILLED TIRES WERE FITTED AS ORIGINAL EQUIPMENT, TIRES MUST BE REPLACED WITH EQUIVALENT SPECIFICATION TIRES AND FOAM-FILL WEIGHT. CONTACT MEC SERVICE.

Changing Tires

Refer to “Lift and Support The Machine” in Section 9 - Transporting and Lifting Instructions for instructions and safety precautions.

CAUTION **Always block the wheels before lifting the machine.**

1. Chock tires on the end of machine opposite the tire to be changed.
2. Break loose but **do not remove** lug nuts before raising the machine.
3. Lift the end of machine requiring a tire change and support with jackstands of adequate capacity.
4. Remove lug nuts and pull the wheel off.
5. Install the replacement wheel.
6. Install lug nuts and tighten.
7. Lower the machine.
8. Tighten lug nuts to proper torque (Refer to Specifications).
9. Remove the chocks.

Nordlock Washers

Nordlock-style lock washers are used in many places on this machine. These twopiece washers have a ramped surface in the center and a splined outer surface. Since the angle of the ramps is larger than the angle of a bolt's thread, and since the splined surfaces grip the material around them, these washers provide excellent bolt-holding capabilities.

Nordlock-style washers must be used anywhere they were originally installed on this machine. Take care during disassembly to collect both parts of each washer for later reuse.

During installation, be sure to assemble the pairs as shown, with the ramped surface in the middle and the radial splines facing out.

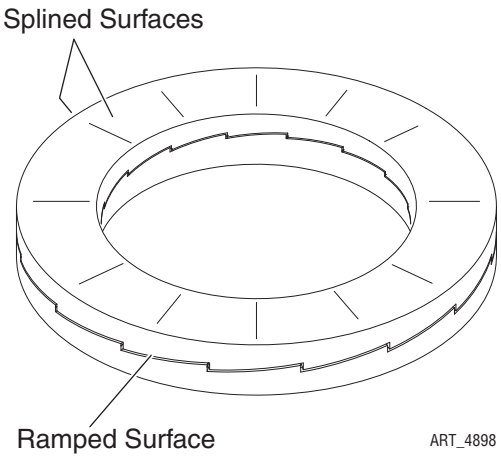

Platform Removal & Installation

WARNING

THIS PROCESS REQUIRES SPECIFIC REPAIR SKILLS AND EXPERIENCE, APPROPRIATE LIFTING EQUIPMENT AND A PROPER WORKPLACE. DEATH, SERIOUS INJURY OR SIGNIFICANT MACHINE DAMAGE COULD OCCUR IF YOU ATTEMPT THIS PROCESS WITHOUT THE APPROPRIATE SKILLS AND EQUIPMENT.

The Platform is normally removed only for replacement or as a step in a larger disassembly.

A fork lift and pallet are needed for this procedure.

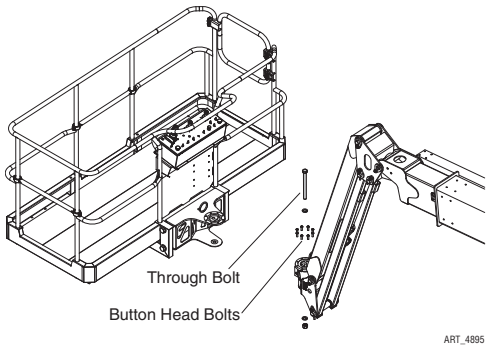

ART_4895

Disassembly

1. Park the machine on a firm level surface.
2. Position the platform on a pallet so that the bottom of the through bolt is off the ground. Strap the platform to the pallet.
3. Disconnect the wiring harness from the Upper Controls box. Carefully pull the wiring harness back to the jib.
4. Remove the center through bolt.
5. Remove the eight button head bolts that secure the platform mount weldment to the platform rotator.
6. Use the forklift to move the platform and pallet away from the rest of the machine.
7. If necessary, that secure the platform mount weldment to the platform rotator.
8. If necessary, remove the platform mount weldment from the platform.

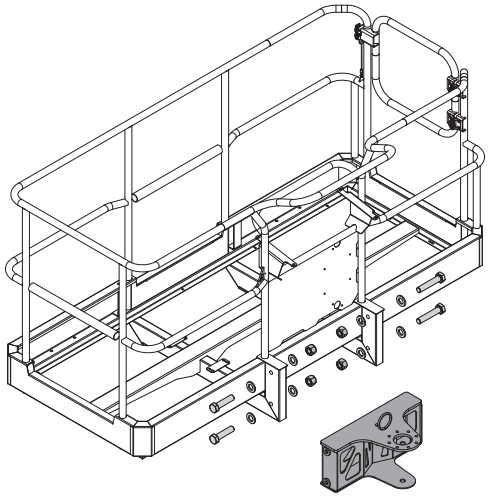
ART_4897

Assembly

Assembly is reverse of disassembly. Tighten all fasteners to proper torque as shown below.

Location	Torque	
Platform Rotator to Platform Mount Weldment	60 lb/ft	75 Nm
Platform Rotator Through Bolt & Nut	375 lb/ft	569/610 Nm
Platform Mount Weldment Bolts & Nuts	250/270 lb/ft	339/366 Nm

Platform Rotator

WARNING

THIS PROCESS REQUIRES SPECIFIC REPAIR SKILLS AND EXPERIENCE, APPROPRIATE LIFTING EQUIPMENT AND A PROPER WORKPLACE. DEATH, SERIOUS INJURY OR SIGNIFICANT MACHINE DAMAGE COULD OCCUR IF YOU ATTEMPT THIS PROCESS WITHOUT THE APPROPRIATE SKILLS AND EQUIPMENT.

The Platform Rotator is located between the Platform and the Jib.

The Platform Rotator is normally removed only for repair or replacement.

This procedure differs from the Platform Removal procedure in that the platform is removed while still attached to the Platform Rotator. This reduces the possibility of injury when the jib pivot points are released.

A fork lift and pallet are needed for this procedure.

Disassembly

1. Park the machine on a firm level surface.
2. Throughout this procedure, thoroughly clean all hydraulic connections and tag all hoses for proper reassembly before disconnecting them. Immediately plug and cap all openings to prevent contamination. Tag electrical connections before disconnecting them.
3. Position the platform on a pallet so that the bottom of the through bolt is off the ground. Strap the platform to the pallet.
4. Disconnect the wiring harness from the Upper Controls box. Carefully pull the wiring harness back to the jib.
5. Disconnect all hydraulic hoses. Immediately plug and cap all openings to prevent contamination.
6. Remove bolt, pin retainer, lower pin and roller from the Platform Rotator lower pivot point. Swing the lower jib links out of the way.
7. Remove bolt, pin retainer and upper pin from the Platform Rotator upper pivot point.
8. Use a forklift to move the platform away from the machine.
9. Support the Platform Rotator. Remove the center through bolt.
10. Remove the six button head bolts that secure the platform mount weldment to the platform rotator. The Platform Rotator is now detached from the platform.

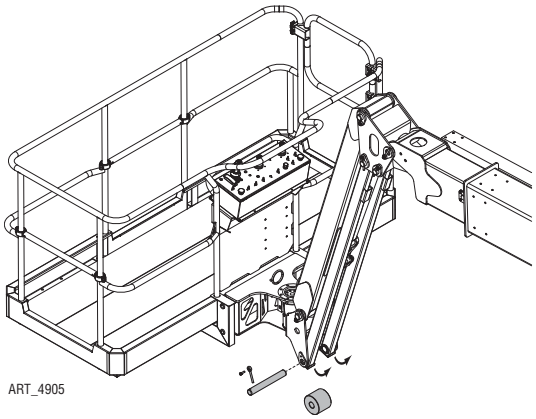

ART_4905

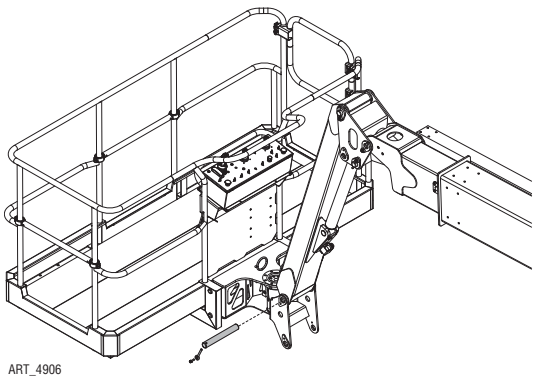

ART_4906

Assembly

Assembly is reverse of disassembly.

Examine all pins for signs of wear, surface imperfections, cracks or gray dust in the pivot area. Replace as necessary.

Tighten all fasteners to proper torque as shown below. Refer to Section 4 - Torque Specifications of this manual for torque specifications of fasteners not listed below.

Location	Torque	
Platform Rotator to Platform Mount Weldment	60 lb/ft	75 Nm
Platform Rotator Through Bolt & Nut	375 lb/ft	569/610 Nm

Jib Cylinder/Jib Components

WARNING

THIS PROCESS REQUIRES SPECIFIC REPAIR SKILLS AND EXPERIENCE, APPROPRIATE LIFTING EQUIPMENT AND A PROPER WORKPLACE. DEATH, SERIOUS INJURY OR SIGNIFICANT MACHINE DAMAGE COULD OCCUR IF YOU ATTEMPT THIS PROCESS WITHOUT THE APPROPRIATE SKILLS AND EQUIPMENT.

The Jib Cylinder is located within the Jib linkage assembly. Its purpose is to move the Jib up and down relative to the position of the Boom tip.

Disassembly

1. Park the machine on a firm level surface.
2. Throughout this procedure, thoroughly clean all hydraulic connections and tag all hoses for proper reassembly before disconnecting them. Immediately plug and cap all openings to prevent contamination. Tag electrical connections before disconnecting them.
3. Lower the boom to the stowed position, so that the boom rests on the turntable.
4. Using the Jib Lift function, raise the jib high enough to position a pallet on the ground beneath the platform. Lower the platform onto the pallet, then strap the platform to the pallet.
5. Disconnect all hydraulic hoses. Immediately plug and cap all openings to prevent contamination.
6. Remove bolt and pin retainer for the lower pin at the Platform Rotator lower pivot point.

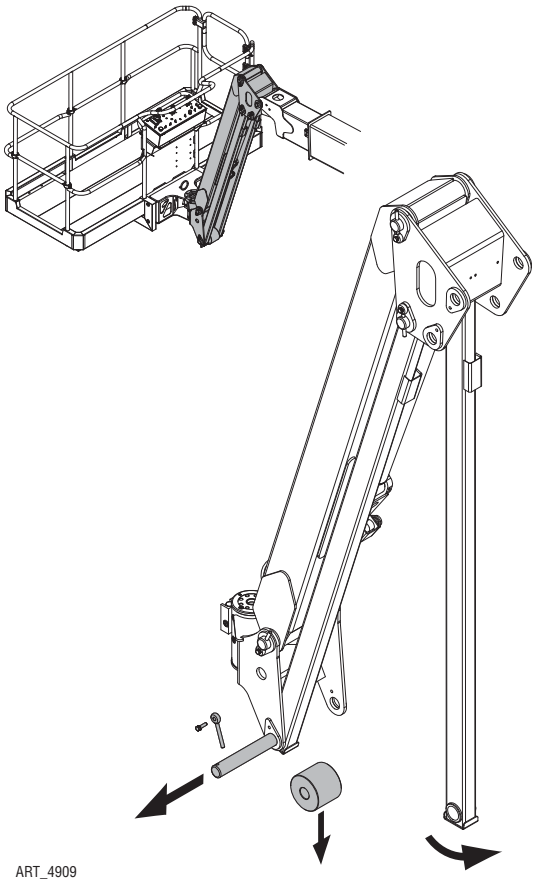
ART_4909

On the pin retainer side, pull the pin out just far enough to release the bottom of the further lower jib link and the jib roller.

Swing the lower jib link out of the way as shown.

IMPORTANT! Leave the pin holding the nearer lower jib link in place. DO NOT pull the pin all the way out.

7. Remove the bolts that secure the Jib Cylinder pin to the jib. Support the end of the Jib Cylinder, then remove the pin.

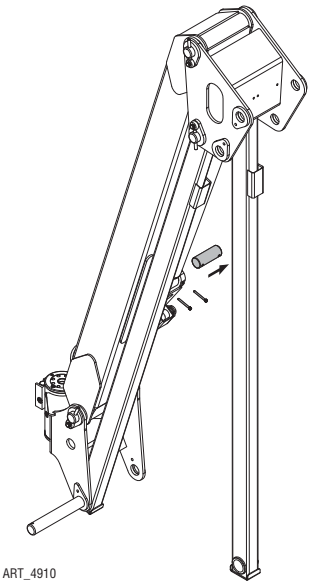

8. Swing the Jib Cylinder out as shown.

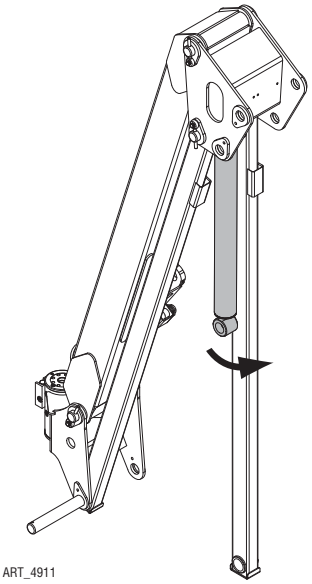

9. Remove bolt and pin retainer for the lower pin at the front lower pivot point of the bell crank weldment.

Support the Jib Cylinder and the lower jib link that are hanging straight down. On the pin retainer side, pull the pin out just far enough to release the link and the cylinder.

Remove the link and cylinder

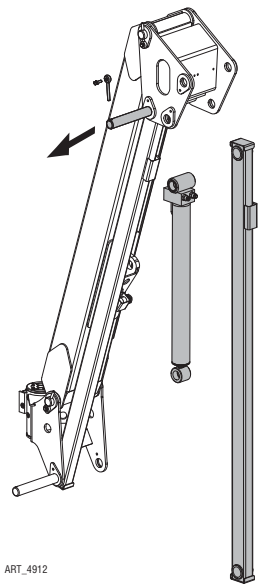

IMPORTANT! Leave the pin holding the nearer lower jib link in place. DO NOT pull the pin all the way out.

Assembly

Assembly is reverse of disassembly.

Examine all pins for signs of wear, surface imperfections, cracks or gray dust in the pivot area. Replace as necessary.

Re-connect the hydraulic lines after the barrel end of the Jib Cylinder is secured. Use the Jib Lift/ Lower function to extend or retract the cylinder to proper length for assembly. Refer to Section 4 - Torque Specifications of this manual for torque specifications of fasteners.

Platform Level Cylinder

WARNING

THIS PROCESS REQUIRES SPECIFIC REPAIR SKILLS AND EXPERIENCE, APPROPRIATE LIFTING EQUIPMENT AND A PROPER WORKPLACE. DEATH, SERIOUS INJURY OR SIGNIFICANT MACHINE DAMAGE COULD OCCUR IF YOU ATTEMPT THIS PROCESS WITHOUT THE APPROPRIATE SKILLS AND EQUIPMENT.

The Platform Level Cylinder is located at the end of the inner boom section. Its purpose is to keep the Platform level as the position of the Boom changes.

Disassembly

1. Park the machine on a firm level surface.
2. Throughout this procedure, thoroughly clean all hydraulic connections and tag all hoses for proper reassembly before disconnecting them. Immediately plug and cap all openings to prevent contamination. Tag electrical connections before disconnecting them.
3. Use the Boom Lift/Lower function to raise the boom slightly.
4. Use the Jib Lift/Lower function to lower the jib completely.
5. Use the Boom Extend/Retract function to extend the boom approximately 5 feet (1.5 m).
6. Use the Boom Lift/Lower function to lower the platform onto the pallet, then strap the platform to the pallet.
7. Place 750 lbs (340 kg) of weight on the platform floor.

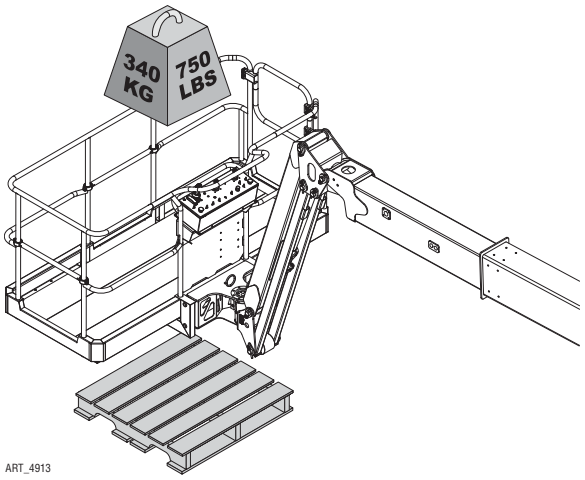

Note: This will prevent the Platform/Jib assembly from tipping when disconnected from the boom.

8. Remove the hose/cable cover from the side of the jib arm.
9. Clean all hydraulic fittings, then tag all hoses for proper reassembly.
10. Disconnect the hydraulic hoses that supply the Jib Lift/Lower Cylinder and the Platform Rotator. Immediately plug and cap all openings to prevent contamination.
11. Tag all electrical harness connections connecting the boom and the jib, then disconnect.
12. Remove the bolts securing the platform level bell crank pins that connect the bell crank to the boom. Secure the Lower Jib Links with a strap, then remove the pins.

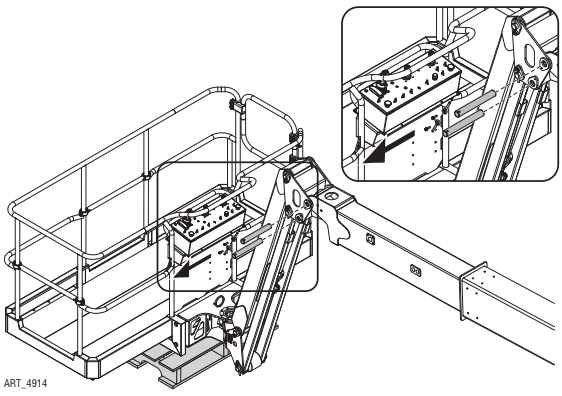

13. Use the Jib Extend/ Retract function to retract the boom away from the Platform/Jib Assembly.

IMPORTANT! Be sure the plates that secure the Platform Level Cylinder pin are exposed.

14. Disconnect the hydraulic hoses that supply the Platform Level Cylinder. Immediately plug and cap all openings to prevent contamination.

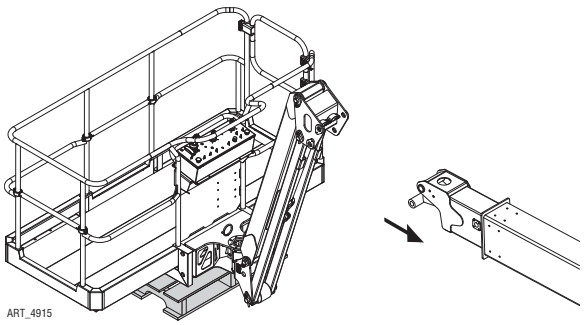

15. Support the Platform Level Cylinder, then remove bolts and pin retainer plates that secure the upper Platform Level Cylinder pin.
16. Remove the pin, then remove the Platform Level Cylinder.

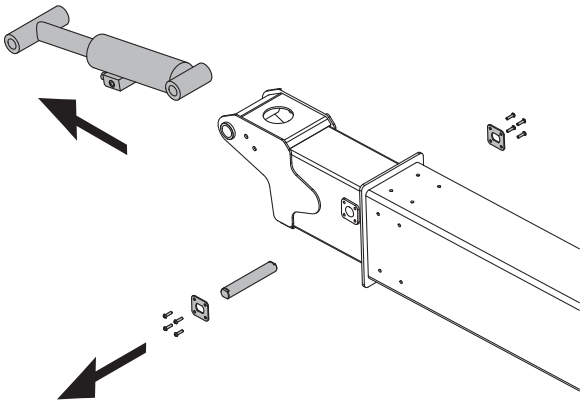

ART_4916

Assembly

Assembly is reverse of disassembly.

Examine all pins for signs of wear, surface imperfections, cracks or gray dust in the pivot area. Replace as necessary.

Re-connect the hydraulic lines to the Platform Level Cylinder after the barrel end of the cylinder is secured. Use the Platform Level function to extend or retract the cylinder to proper length for assembly.

Refer to Section 4 - Torque Specifications of this manual for torque specifications of fasteners.

Boom Extend Cylinder

WARNING

THIS PROCESS REQUIRES SPECIFIC REPAIR SKILLS AND EXPERIENCE, APPROPRIATE LIFTING EQUIPMENT AND A PROPER WORKPLACE. DEATH, SERIOUS INJURY OR SIGNIFICANT MACHINE DAMAGE COULD OCCUR IF YOU ATTEMPT THIS PROCESS WITHOUT THE APPROPRIATE SKILLS AND EQUIPMENT.

The Boom Extend Cylinder is located within the Main Boom assembly. Its purpose is to extend the inner boom section.

Disassembly

1. Park the machine on a firm level surface.
2. Throughout this procedure, thoroughly clean all hydraulic connections and tag all hoses for proper reassembly before disconnecting them. Immediately plug and cap all openings to prevent contamination. Tag electrical connections before disconnecting them.
3. Lower the boom to the stowed position, so that the boom rests on the turntable.
4. Use the Boom Extend/Retract function to extend the boom approximately 5 feet (1.5 m) to expose the rod pins.
5. Disconnect all hydraulic hoses. Immediately plug and cap all openings to prevent contamination.
6. At the base end of the main boom assembly, tag and disconnect the wiring harness from the angle transducers and the Boom Extend proximity sensor*. Remove the angle transducer and the proximity sensor and mounting plate.
   - If a Proximity sensor exists.
7. Ensure that all hydraulic hoses and electrical wiring near the access hole are out of the path of removal.

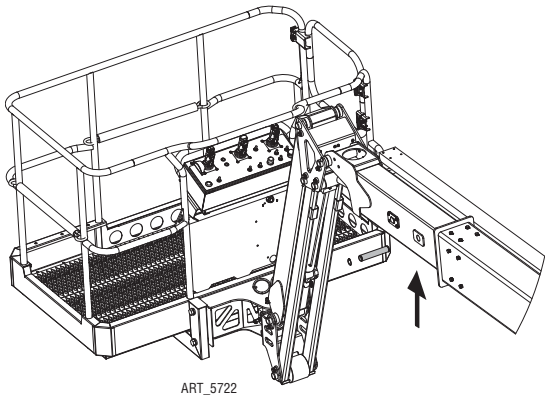
ART_5722

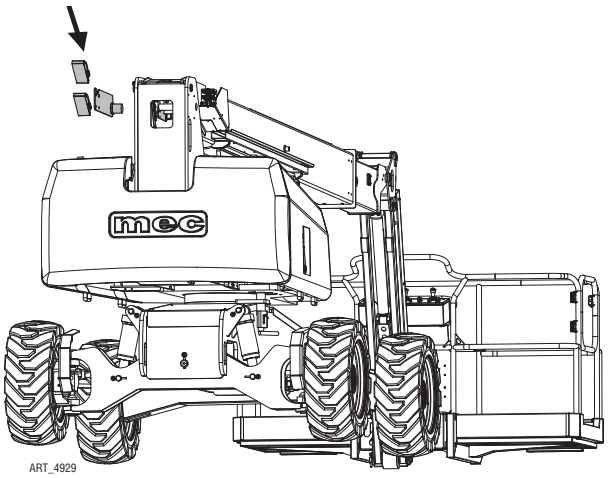
ART_4929

8. Remove the retainer ring from one side of the rod-end pins. Remove the pin using a soft metal drift. Remove bolt and pin retainer that secure the barrel-end pin at the rear end of the cylinder. Remove the pin using a soft metal drift.

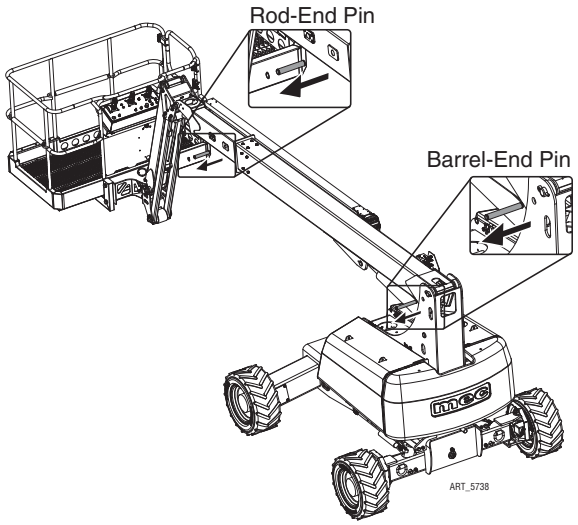

9. Wrap a sling around the cylinder base, then pull the end of the cylinder approximately 5 feet (1.5 m) out of the boom. Be careful as the end of the cylinder comes out through the access hole.

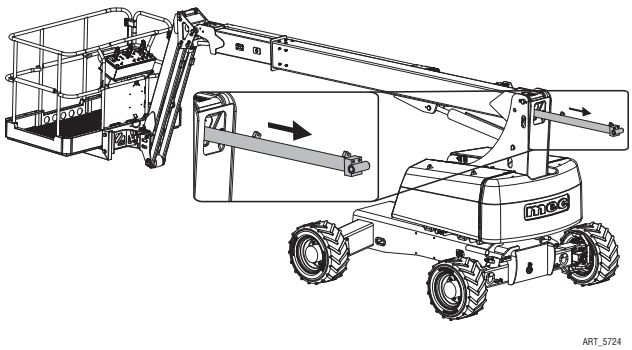

10. Attach a sling to the cylinder barrel and apply slight lifting pressure with a forklift or overhead crane. Use this sling to continue pulling the cylinder out of the boom.

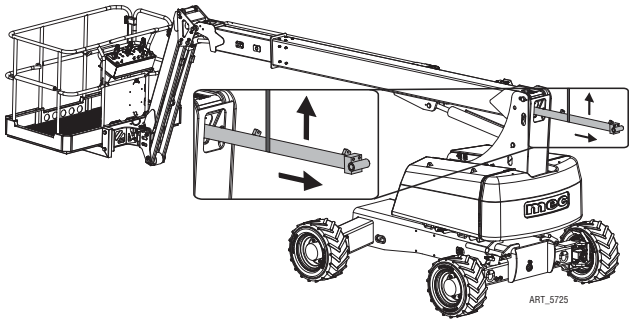

11. Pull the cylinder out approximately 10 feet (3 m). Attach a second sling close to where the cylinder exits the machine. At this point, it is necessary to lift the rod end of the cylinder so that the cylinder foot and slide pad will clear the wearpad bolts inside the boom. Prior to this point, the weight at the front of the cylinder had been supported by this foot.
12. Carefully extract the cylinder completely from the boom.

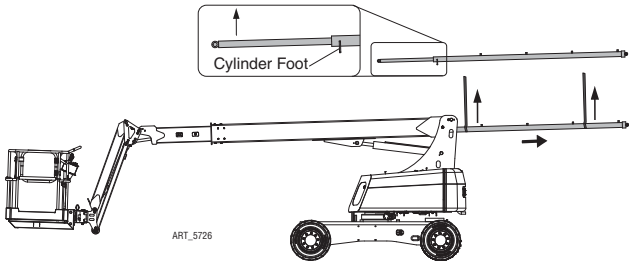

IMPORTANT! Measure and record the length of the slightly-extended cylinder for easier reassembly.

Assembly

Assembly is reverse of disassembly.

Examine all pins for signs of wear, surface imperfections, cracks or gray dust in the pivot area. Replace as necessary.

Extend the cylinder to the length recorded previously to ease reassembly. Ensure that the pin holes at the rod end are in line with the pin hole at the barrel end.

If necessary, re-connect the hydraulic lines to the Boom Extend Cylinder after the cylinder is secured at the rear of the boom. Use the Boom Extend/Retract function to extend or retract the cylinder to proper length for assembly.

Install the pin at the barrel end of the cylinder. Use a pin alignment tool to position one rod end pin hole, then install the pin in the other hole. Install the second pin at the rod end.

Refer to Section 4 - Torque Specifications of this manual for torque specifications of fasteners.

Boom Lift Cylinder/Boom Linkage

WARNING

THIS PROCESS REQUIRES SPECIFIC REPAIR SKILLS AND EXPERIENCE, APPROPRIATE LIFTING EQUIPMENT AND A PROPER WORKPLACE. DEATH, SERIOUS INJURY OR SIGNIFICANT MACHINE DAMAGE COULD OCCUR IF YOU ATTEMPT THIS PROCESS WITHOUT THE APPROPRIATE SKILLS AND EQUIPMENT.

The Boom Lift Cylinder is located within the boom linkage near the turntable. It's purpose is to raise and lower the boom assembly.

Note: The module doors and module contents are omitted from the following illustrations to better show the disassembly process. It is not necessary to remove the doors or contents to perform this procedure.

Disassembly

1. Park the machine on a firm level surface.
2. Throughout this procedure, thoroughly clean all hydraulic connections and tag all hoses for proper reassembly before disconnecting them. Immediately plug and cap all openings to prevent contamination. Tag electrical connections before disconnecting them.
3. Remove the Platform/Jib assembly as described in steps 1 through 11 of the Platform Level Cylinder removal procedure on page 72.
4. Use the Boom Lift/Lower function to position the boom as shown at right.
5. Remove the hose and cable guards and coverings. It is not necessary to remove the cable track or its contents from the Main Boom Assembly.
6. Make note of all cable and hose routing from the turntable to the main boom assembly.
7. Disconnect the hoses and control cable connected to the Platform Functions Manifold, located at the base of the Main Boom Assembly. Pull these down through the linkage back to the turntable.
8. Disconnect the power-to-platform cable and the platform control cable from their connections in the turntable and the Control Module. Pull these up through the linkage to the Main Boom Assembly.

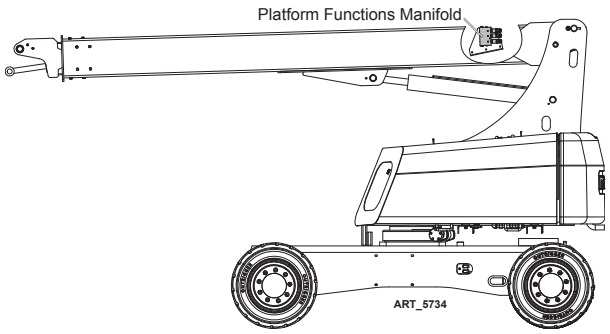

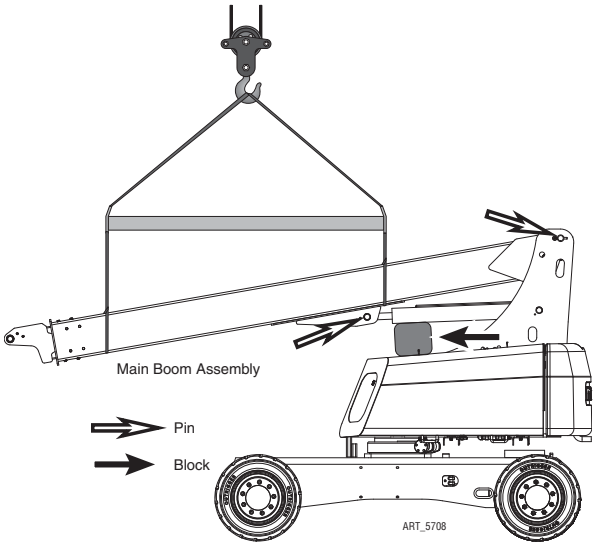

9. Rig slings and a spreader bar from the Main Boom Assembly to an overhead hoist as shown. Apply slight lifting pressure.
10. Place a 4x4 inch (10x10 cm) block between the Lift Cylinder and Lower Boom as shown. Remove the pin and the rod end of the Lift Cylinder.
11. Remove the pivot pin at the base of the Main Boom Assembly.
12. Remove the Main Boom Assembly.

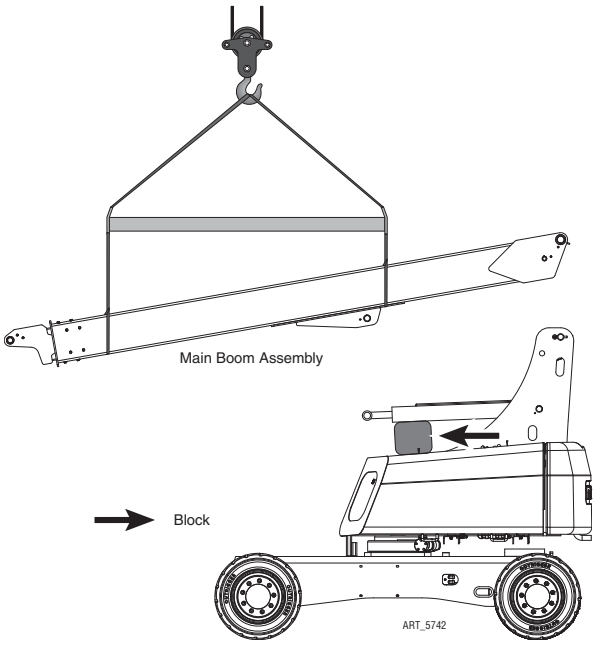

13. Rig slings from the Lift Cylinder to an overhead hoist as shown.
14. Disconnect the hydraulic hoses and control wiring connected to the Lift Cylinder.
15. Remove the pin at the barrel end of the Lift Cylinder.
16. Remove the Lift Cylinder.

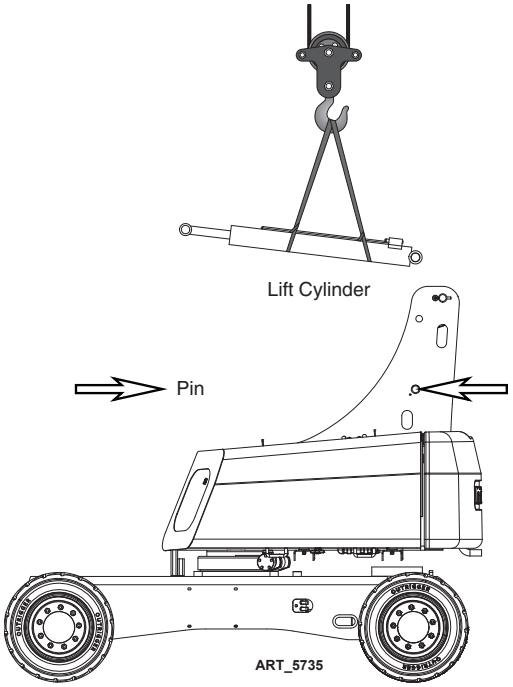

Assembly

Assembly is reverse of disassembly.

Examine all pins for signs of wear, surface imperfections, cracks or gray dust in the pivot area. Replace as necessary.

Refer to Section 4 - Torque Specifications of this manual for torque specifications of fasteners.

Main Boom Assembly

WARNING

THIS PROCESS REQUIRES SPECIFIC REPAIR SKILLS AND EXPERIENCE, APPROPRIATE LIFTING EQUIPMENT AND A PROPER WORKPLACE. DEATH, SERIOUS INJURY OR SIGNIFICANT MACHINE DAMAGE COULD OCCUR IF YOU ATTEMPT THIS PROCESS WITHOUT THE APPROPRIATE SKILLS AND EQUIPMENT.

Disassembly

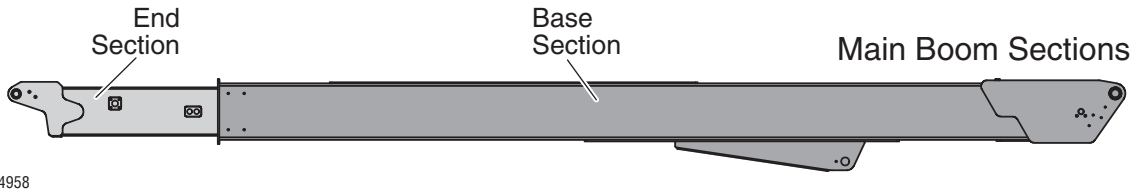

ART_4958

1. Park the machine on a firm level surface.
2. Throughout this procedure, thoroughly clean all hydraulic connections and tag all hoses for proper reassembly before disconnecting them. Immediately plug and cap all openings to prevent contamination. Tag electrical connections before disconnecting them.
3. Remove the Platform/Jib Assembly and Platform Level Cylinder on page 72.
4. Remove the Boom Extend Cylinder on page 74.
5. Remove the Main Boom Assembly as described in steps 1 through 12 of the Boom Lift Cylinder/Boom Linkage disassembly procedure on page 76. Set the Main Boom Assembly on stands for further disassembly.
6. Remove the cable track and associated machine parts from the boom. Lay all cable and hoses out of the way to avoid damage.
7. Slide the End Section of the boom out approximately 6 feet (2 m). Position an overhead hoist over the End Section and attach a sling.

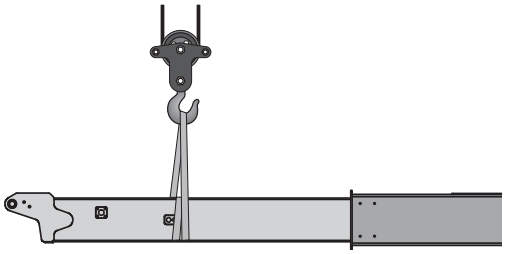
ART_4959

8. Remove the side and the top inner wear pads and shims from the front of the boom's Base Section.
9. Apply slight lifting pressure.
10. Remove the bottom inner wear pad from the front of the boom's Base Section.
11. Extract the End Section from the front of the boom by carefully pulling and lifting with the hoist or forklift. Once the End Section has been extracted approximately 90%, use a second hoist or fork lift to support the end of the End Section that remains inside the boom.
12. Carefully extract the boom End Section completely.
13. Remove the wear pads from the End Section

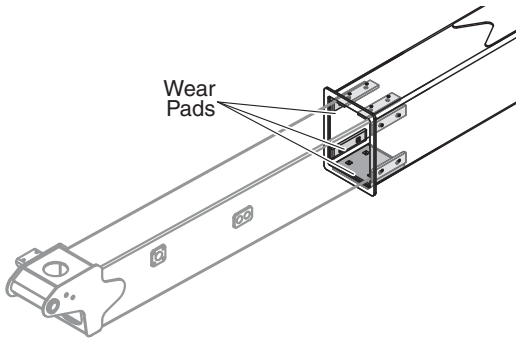

ART_4960

Assembly

The boom must be properly shimmed to function correctly. Each boom section must be shimmed to a clearance no greater than 0.030” (0.762mm) at its tightest point of travel. It may be necessary to run each boom section in and out several times to properly identify the tightest point of travel, and to adjust the number of shims.

After the proper number of shims has been determined, tighten the mounting bolts for that set of wear pads before moving on to the next step. Apply one (1) drop of Loctite® 242 or equivalent to bolts securing wear pads and shims. See the Section 4 - Torque Specifications of this manual for proper torque specifications.

Shims are not used on the larger square wearpads located on the top of the End section and bottom of the Base Section.

Standard Shims	
22224	Shim, .020” (0.5 mm)
11861977	Shim, .040” (1 mm)
11861981	Shim, .120” (3 mm)
11861982	Shim, .200” (5 mm)
11861983	Shim, .400” (10 mm)

Wear pads use M10-1.5 bolts in varying lengths, depending on shim use. Use minimum bolt length needed to fully engage threaded insert. Wear pad bolts must be installed with M10 Nordlock washers.

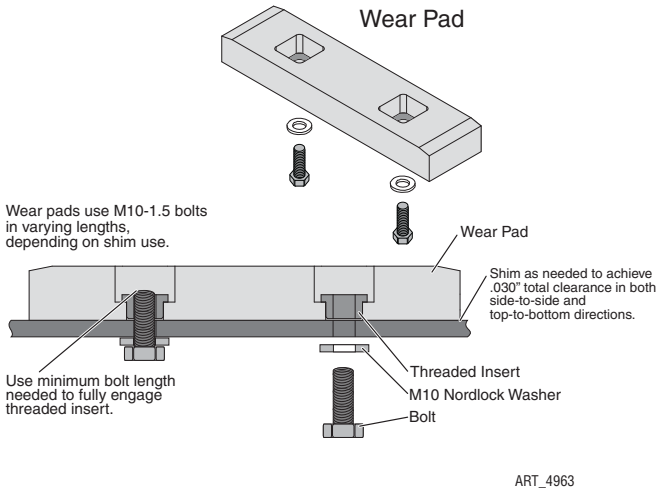

Bolts & Washers	
50033	Bolt, M10 x 25
50034	Bolt, M10 x 30
50332	Bolt, M10 x 35
50035	Bolt, M10 x 40
50036	Bolt, M10 x 50
50021	Bolt, M10 x 55
50006	Washer, M10 Nordlock

1. Use an overhead hoist of forklift to position the End Section of the boom in front of the Base Section.
2. With wearpads and shims in place, insert the End Section into the Base Section of the boom.
3. Keeping the sections as parallel as possible, slide the End Section into and out of the Base Section. Shim the End Section External Wearpads as needed to achieve proper clearance.
4. Tighten the wearpad mounting bolts. Apply one (1) drop of Loctite® 242 or equivalent per bolt. See Section 4 - Torque Specifications of this manual for proper torque specifications. Insert the End Section into the Base Section of the boom.

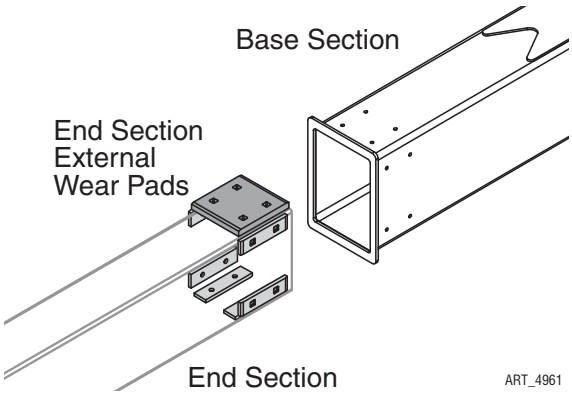

5. With the hoist still attached to the boom End Section, install the Base Section Internal Wear pads and shims. Use the hoist to position the End Section to provide clearance.

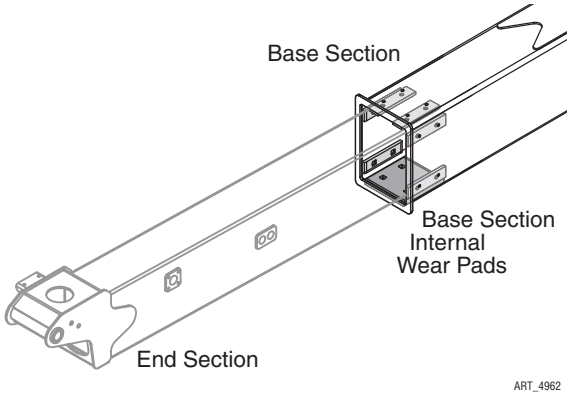

WARNING **DO NOT PLACE ANY PART OF YOUR BODY BETWEEN THE BOOM SECTIONS. USE TOOLS TO POSITION SHIMS AND WEARPADS.**

6. Keeping the sections as parallel as possible, slide the End Section into and out of the Base Section. Shim the Base Section Internal Wearpads as needed to achieve proper clearance.
7. Tighten the wearpad mounting bolts. Apply one (1) drop of Loctite® 242 or equivalent per bolt. See Section 4 - Torque Specifications of this manual for proper torque specifications. Push the End Section into the Base Section of the boom.
8. Install the Main Boom Assembly in reverse of steps 1 through 12 of the Boom Lift Cylinder/Boom Linkage disassembly procedure on page 76.
9. Install the Boom Extend Cylinder on page 74.
10. Install the Platform/Jib Assembly and Platform Level Cylinder on page 72.

Swing Bearing/Turntable Components

WARNING

THIS PROCESS REQUIRES SPECIFIC REPAIR SKILLS AND EXPERIENCE, APPROPRIATE LIFTING EQUIPMENT AND A PROPER WORKPLACE. DEATH, SERIOUS INJURY OR SIGNIFICANT MACHINE DAMAGE COULD OCCUR IF YOU ATTEMPT THIS PROCESS WITHOUT THE APPROPRIATE SKILLS AND EQUIPMENT.

The Swing Bearing is located between the turntable and the machine chassis. It's purpose is to provide 355° non-continuous turntable rotation.

Note: The module doors and module contents are omitted from some of the following illustrations to better show the disassembly process. It is not necessary to remove the doors or contents to perform this procedure unless stated.

Disassembly

1. Park the machine on a firm level surface.
2. Throughout this procedure, thoroughly clean all hydraulic connections and tag all hoses for proper reassembly before disconnecting them. Immediately plug and cap all openings to prevent contamination. Tag electrical connections before disconnecting them.
3. Remove the Platform/Jib assembly as described in steps 1 through 11 of the Platform Level Cylinder removal procedure on page 72.
4. Disassemble the boom linkage as described in the Boom Lift Cylinder/Boom Linkage procedure on page 76.
5. Removes hoses that route through the turret into the chassis.

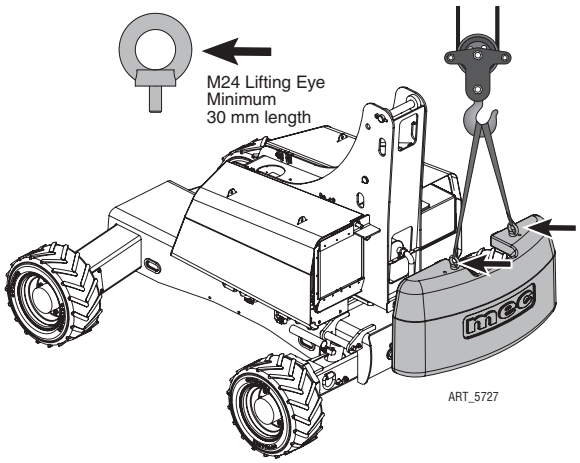

Note: Counterweight Mass:
1620 LBS
735KG

6. Rig slings and a spreader bar from the Turntable Assembly to an overhead hoist as shown. Use a separate sling for each lift point.

Apply slight lifting pressure.

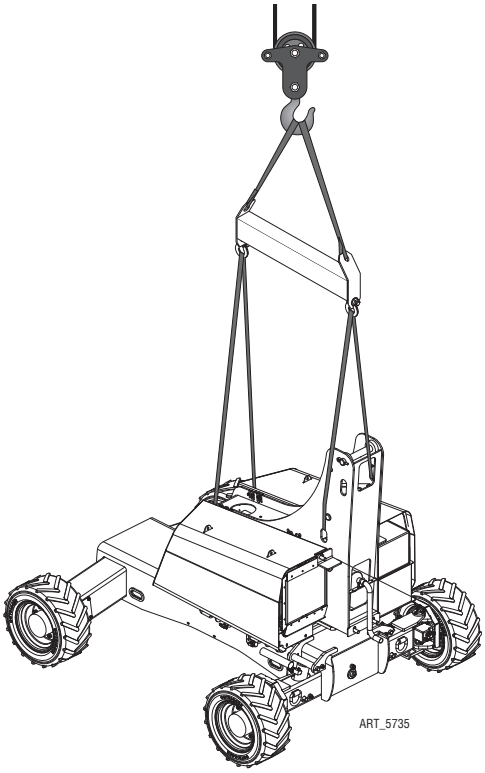

7. Remove the bolts and washers holding the Turntable Assembly to the Swing Bearing.

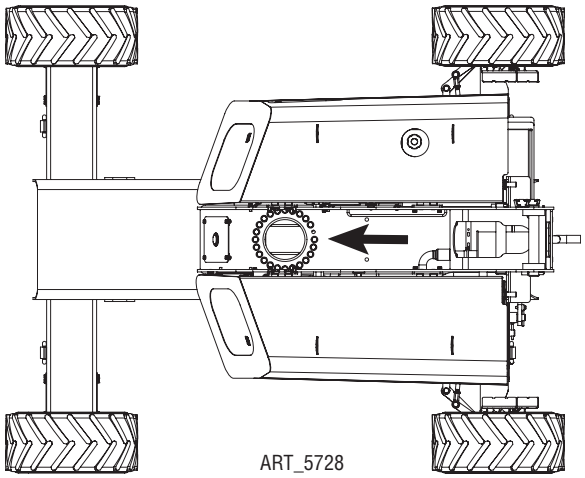

WARNING

THE WASHERS USED ON THESE BOLTS ARE HARDENED STRUCTURAL WASHERS.

REPLACE LOST OR DAMAGED WASHERS WITH MEC PART #50582 ONLY.

8. Carefully apply lifting pressure. Check the balance of the load before lifting and adjust the rigging as necessary.
9. Lift the Turntable Assembly off the Chassis.

Note: Turntable Mass with Counterweight removed:
3565 LBS
1620 KG

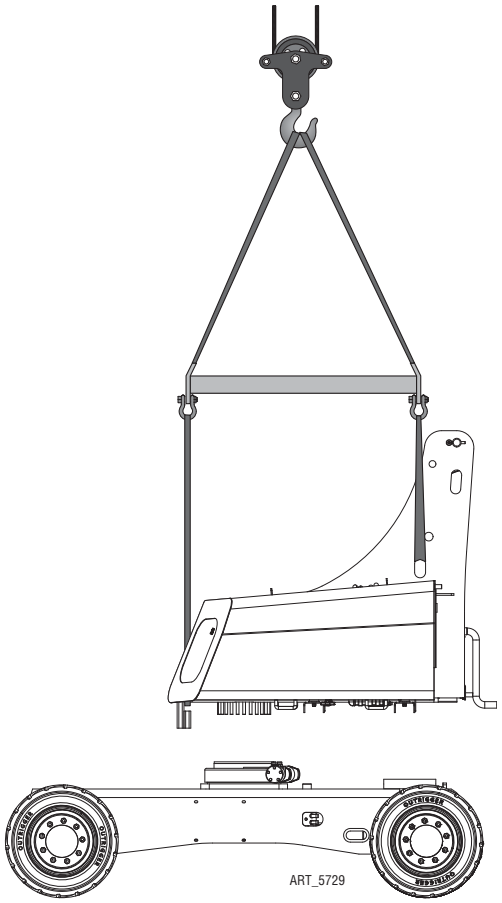

10. Disconnect the hydraulic hoses connected to the Swing Drive.

Note: Swing Drive Mass:
130 LBS
59 KG

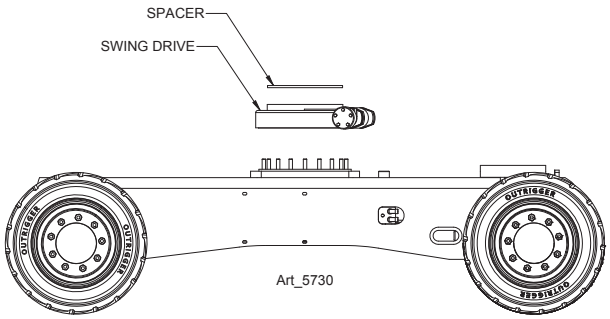

11. Remove the bolts and washers holding the Swing Bearing to the Chassis.

WARNING

THE WASHERS USED ON THESE BOLTS ARE HARDENED STRUCTURAL WASHERS. REPLACE LOST OR DAMAGED WASHERS WITH MEC PART #50582 ONLY.

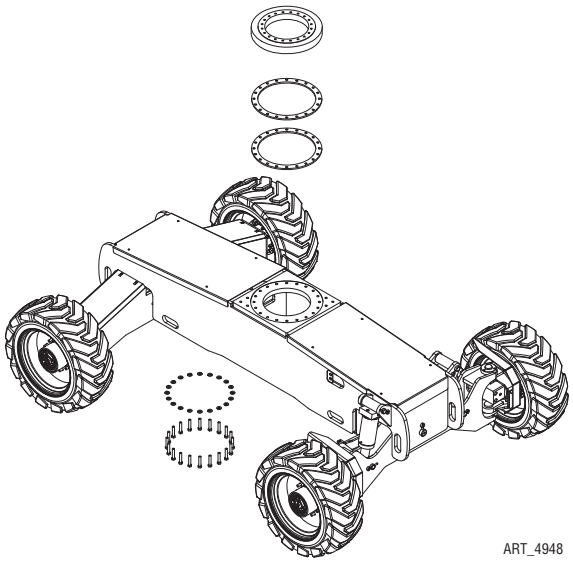

12. Remove the Swing Bearing and ring spacers from the Chassis.

Note: Ring Bearing Mass:
121 LBS
55 KG

Assembly

Assembly is reverse of disassembly, with special instructions regarding Swing Bearing installation below.

Tighten all fasteners to proper torque as shown below. Refer to Section 4 - Torque Specifications of this manual for torque specifications of fasteners not listed below.

Location	Torque	
Swing Bearing Bolts on Chassis	180 lb/ft	244 Nm
Swing Bearing Bolts on Turret	180 lb/ft	244 Nm
Swing Drive Bolts	320 lb/ft	434 Nm

Swing Bearing Installation

Before attaching the Swing Bearing to the machine, align the swing motor perpendicular to the chassis, then offset the swing drive by one bolt as shown.

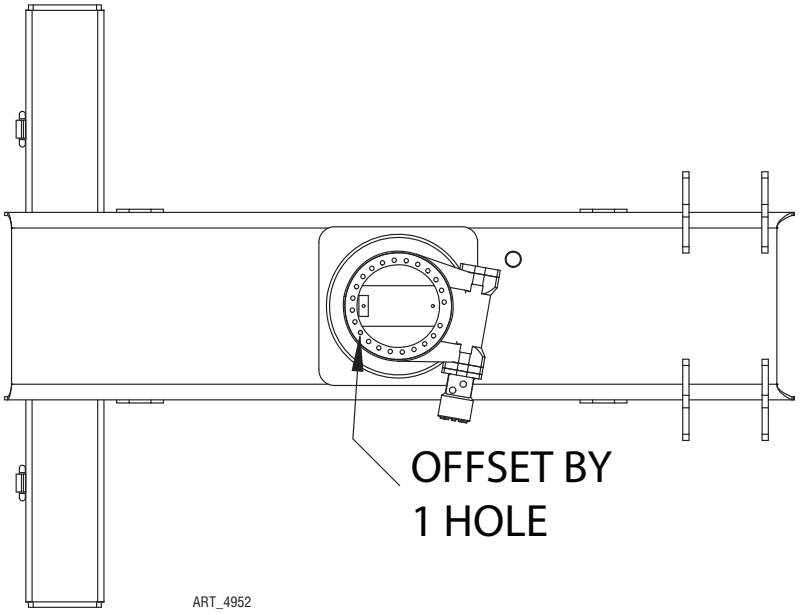

Use an alternating criss-cross pattern to tighten the bolts securing the Swing

Bearing to the chassis. Tighten the bolts in three stages.

Tighten to 50 lb/ft (68 Nm) on the first pass.

Tighten to 100 lb/ft (136 Nm) on the second pass.

Tighten to 180 lb/ft (244 Nm) on the first pass.

Use the same pattern and stages later when securing the turntable to the Swing Bearing.

Swing Bearing Attachment Bolt Torque Inspection

Inspect the Swing Bearing Attachment Bolt Torqu every 2 years. Failure to inspect bolt torque could lead to bolt breakage.

1. Address the bolts that attach the Swing Gear to the Turret first. Choose 4 bolts that are easiest to reach and are spaced apart by 3-4 bolts.
2. Set a torque wrench to 180 LB-FT (244Nm)
3. Attempt to tighten the 4 bolts previously identified:
   1) No bolt movement – skip to step 4
   2) Bolt rotates from very slight to excessive – torque all bolts in the ring to 180 LB-FT (244Nm). Use an alternating criss-cross pattern to tighten the bolts If excessive movement is found, tighten the bolts in three stages:
      - Tighten to 50 LB-FT (69Mn) on the first pass
      - Tighten to 100 LB-FT (136Nm) on the second pass.
      - Tighten to 180 LB-FT (144Nm) on the third pass.
4. Address the bolts that attach the swing gear to the Chassis next. Choose 4 bolts that are easiest to reach and are spaced apart by 3-4 bolts.
5. Set a torque wrench to 180 LB-FT (244Nm)
6. Attempt to tighten the 4 bolts previously identified:
   1) No bolt movement – skip to step 4
   2) Bolt rotates from very slight to excessive – torque all bolts in the ring to 180 LB-FT (244Nm). Use an alternating criss-cross pattern to tighten the bolts If excessive movement is found, tighten the bolts in three stages:
      - Tighten to 50 LB-FT (69Mn) on the first pass
      - Tighten to 100 LB-FT (136Nm) on the second pass.
      - Tighten to 180 LB-FT (144Nm) on the third pass.

Drive Motors & Gear Hubs

Note: See Section 24 - Axles & Section 25 - Hydraulics of the Parts portion of this manual for parts lists.

There is one hydraulic drive wheel motor and one gear hub located at each wheel.

CAUTION

Clean all fittings before disconnecting hoses.

Tag hoses for proper reassembly.

Immediately plug and cap all openings to prevent contamination.

Replace any O-rings and inspect all hoses for crack and damage before reassembly.

Refer to “Lift and Support The Machine” in Section 9 - Transporting and Lifting Instructions for instructions and safety precautions.

Removal - Steering Axle

1. Raise and support the steering end of machine.
2. Remove the wheel and tire assembly.
3. Remove the retaining pins that secure the steer cylinder and the tie rod to the motor/hub housing. Rotate the housing to access the drive motor.
4. Clean all hydraulic fittings, then tag all hoses for proper reassembly.
5. Disconnect all hydraulic hoses. Immediately plug and cap all openings to prevent contamination.
6. Support the drive motor, then remove the two bolts connecting the drive motor to the gear hub. Remove the motor.
7. Support the gear hub, then remove the six bolts holding the gear hub to the motor/hub housing. Carefully remove the gear hub.
8. Installation is reverse of removal. Apply one (1) drop of Loctite® 242 or equivalent to mounting bolts. Replace the O-ring on the brake release port of the gear hub. Take great care that this O-ring is installed correctly. Use grease to hold the O-ring in place during installation.

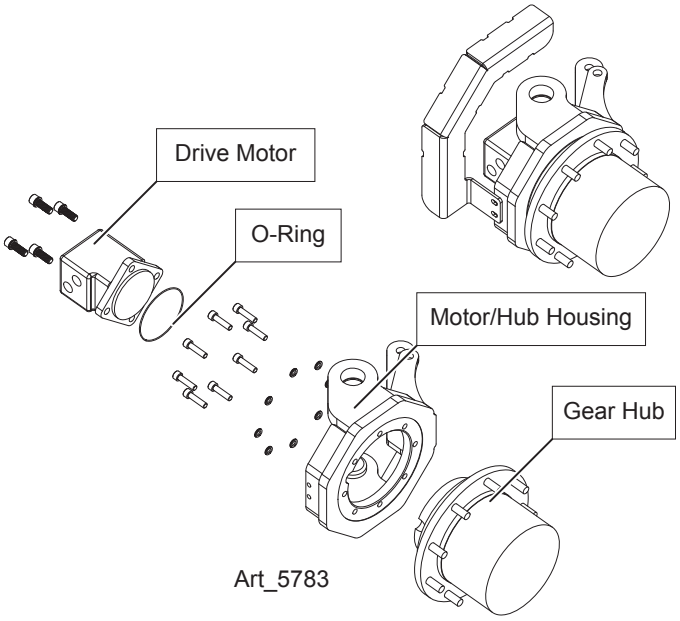

Removal - Non-steering Axle

1. Raise and support the non-steering end of machine.
2. Remove the wheel and tire assembly.
3. Remove the axle weldment cover.
4. Clean all hydraulic fittings, then tag all hoses for proper reassembly.
5. Disconnect all hydraulic hoses. Immediately plug and cap all openings to prevent contamination.
6. Support the drive motor, then remove the two bolts connecting the drive motor to the gear hub. Remove the motor.
7. Support the gear hub, then remove the six bolts holding the gear hub to the motor/hub housing. Carefully remove the gear hub.
8. Installation is reverse of removal. Apply one (1) drop of Loctite® 242 or equivalent to mounting bolts. Replace the O-ring on the brake release port of the gear hub. Take great care that this O-ring is installed correctly. Use grease to hold the O-ring in place during installation.

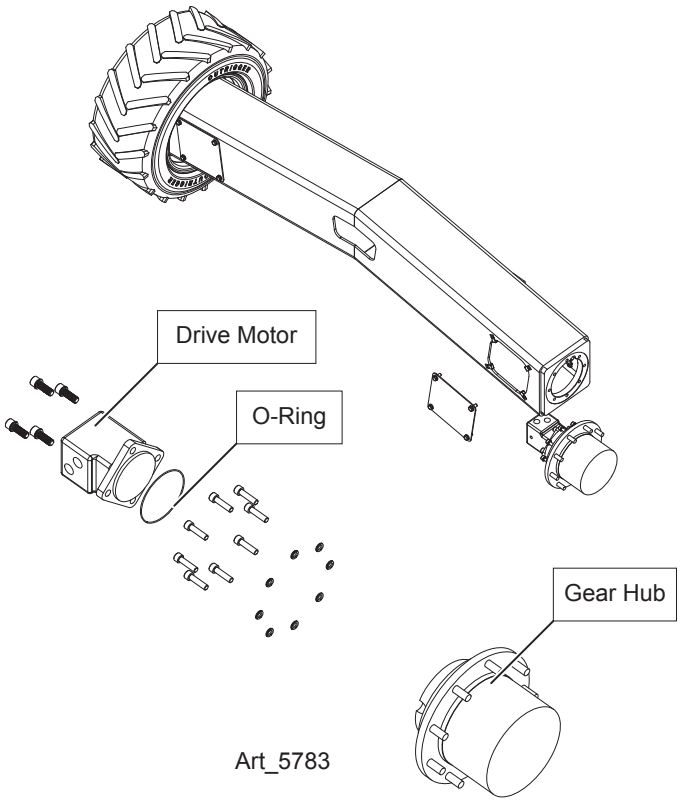

Drive Motors

MEC does not recommend end-user maintenance or repair of the drive motors. Contact MEC or for the nearest service provider.

Gear Hubs

Lubrication

- Change the oil after the first 100 hours of operation
- Change the oil every 2500 hours or every 12 months thereafter.
- Use SAE 90 Multipurpose Hypoid Gear Oil, API Service Classification GL5

To change the oil in the gear hub:

1. Position the gear hub as shown at left.
2. Loosen and remove the both plugs and allow oil to drain.
3. Position the gear hub as shown at right.
4. Fill with oil until the level reaches the lower drain hole.
5. Replace the plugs, using new seals.



Engine Maintenance

For complete service information consult the engine manual that came with the machine.

Always wear protective eye-wear when working with fuel and oil.

CAUTION

Engine should be OFF when replacing filter elements.

Do not run the engine with the air filter element removed.

Oil And Oil Filter

Dispose of used oil and filters properly.

Engine oil should be checked daily prior to machine use. Oil should be changed after the first 50 hours of service, and every 500 hours or once per year thereafter.

Engine oil should be MIL-L-2104C or have properties of API classification CF or higher.

Oil used with this engine must have proper API and SAE Engine Oil classification according to ambient temperatures as shown below:

Above 77° F (25° C)	SAE30, SAE10W-30 or SAE10W-40
32° ~ 77° F (0 ~ 25° C)	SAE20, SAE10W-30 or SAE10W-40
Below 32° F (0° C)	SAE10W, SAE10W-30 or SAE10W-40

1. Use a suitable container to catch drained oil. Remove the drain plug. After oil has drained, replace the drain plug.
2. Remove the old filter and wipe the filter seal contact surface with a clean towel.
3. Coat the seal on the new filter with clean oil, then install and tighten by hand.
4. Fill engine with appropriate motor oil until the dipstick indicates FULL. Capacity is 1.3 US gallons (5.1 L).
5. Recheck dipstick after running engine. Fill as necessary.

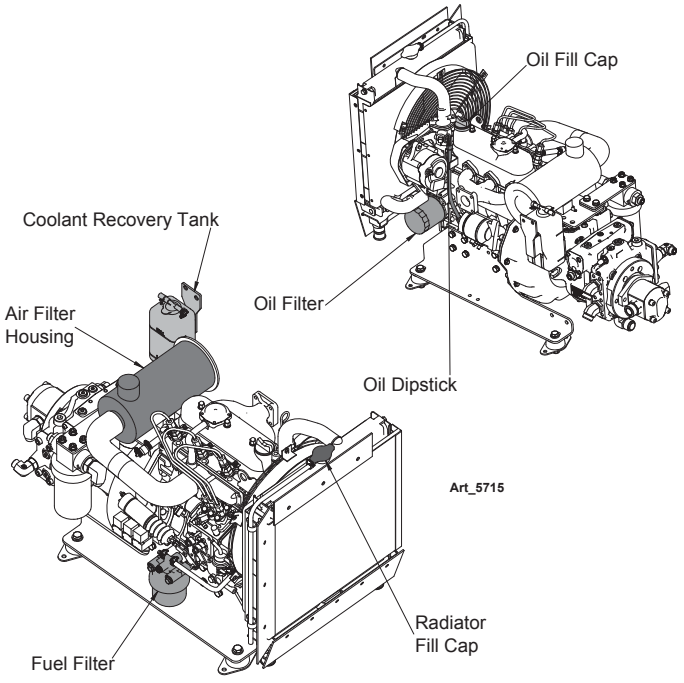

Air Filter Element

1. Clean the air filter housing before opening.
2. Remove the cap to the air filter canister.
3. Remove old filter and replace with a new filter.
4. Replace the cap to the air filter canister.

Fuel Filter

1. Turn OFF valve on bottom of fuel tank and clean the filter area before removing the filter.
2. Place a suitable container beneath the fuel filter assembly to catch spilled fuel.
3. Turn filter cartridge counterclockwise to remove. Wipe the filter seal contact surface with a clean towel
4. Coat the seal on the new filter with clean oil, then install and tighten by hand.
5. Open valve at fuel tank and check for leaks.
6. Purge the air from the fuel system as follows;
   - Fill fuel tank to the fullest extent. Open valve on bottom of fuel tank.
   - Loosen Fuel Filter Bleed Screw on top of fuel filter housing a few turns. Close the bleed screw when fuel flows steadily and there are no more bubbles.
   - Open the Fuel Injector Bleed Petcock on the fuel injector pump.
   - Operate the fuel feed pump lever by hand repeatedly until a steady stream of fuel runs from petcock with no sign of air.
   - Close the Fuel Injector Bleed Petcock and start the engine.

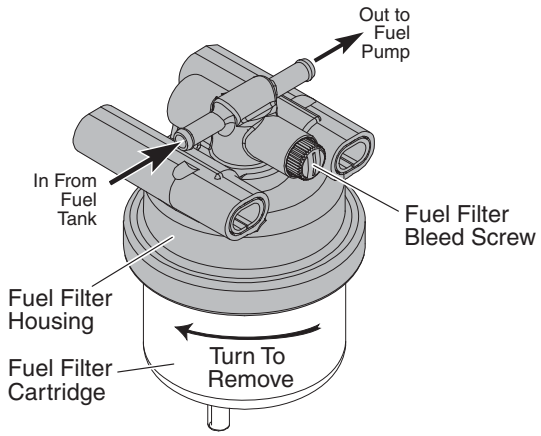

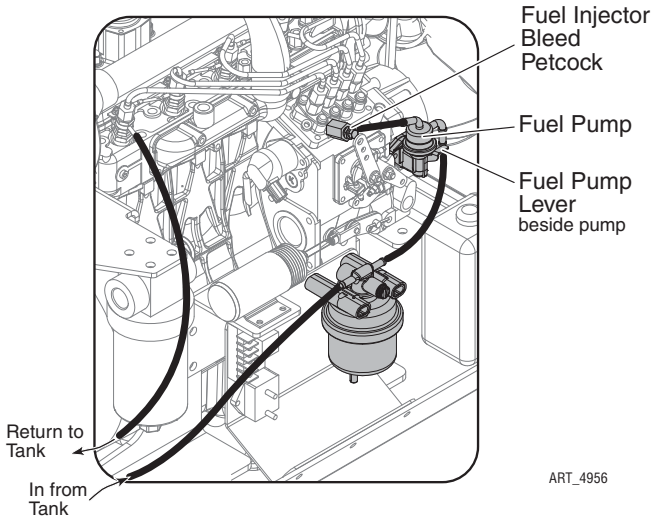

Note: The engine will crank for up to 10 seconds before the starter is cut out for a mandatory 30-second starter cooldown cycle. A red light will illuminate on the Base Control Station during the cool-down cycle.

Throttle Adjustment

Idle Speed Adjustment

1. Bring engine to operating temperature.
2. Slow engine to complete idle.
3. Adjust the Idle Speed Screw until the RPM is 1500. Adjust slightly up or down to avoid vibrations.
4. Hold the Idle Speed Screw while tightening the jam nut to prevent change in adjustment.

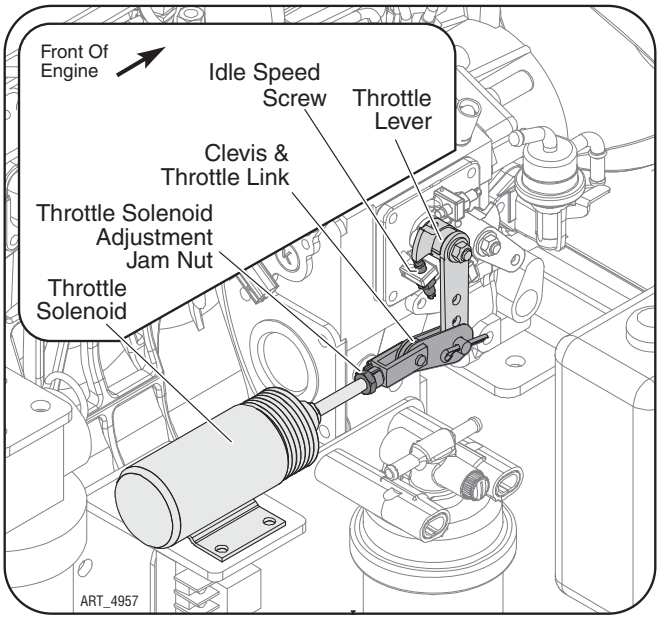

Throttle Solenoid Adjustment

IMPORTANT! This final adjustment must be made after all other throttle speed adjustments. The solenoid must be free to retract fully in order to turn OFF the High Amperage Pull Circuit. Improper adjustment will result in solenoid failure and may damage the electrical system.

1. With the engine OFF, disconnect the Clevis from the Throttle Lever.
2. Manually retract the Throttle Solenoid by grasping the piston, just ahead of the boot, and pull to the fully retracted position.

Note: The solenoid must retract and extend smoothly.

3. Have a second person rotate the Throttle Lever as far as it will go.
4. With the Throttle Solenoid piston fully retracted, adjust the Clevis until its hole lines up with the Throttle Link that is attached to the fully-rotated Throttle Lever. Reconnect the Clevis to the Throttle Link.
5. Tighten the Throttle Solenoid Jam Nut.

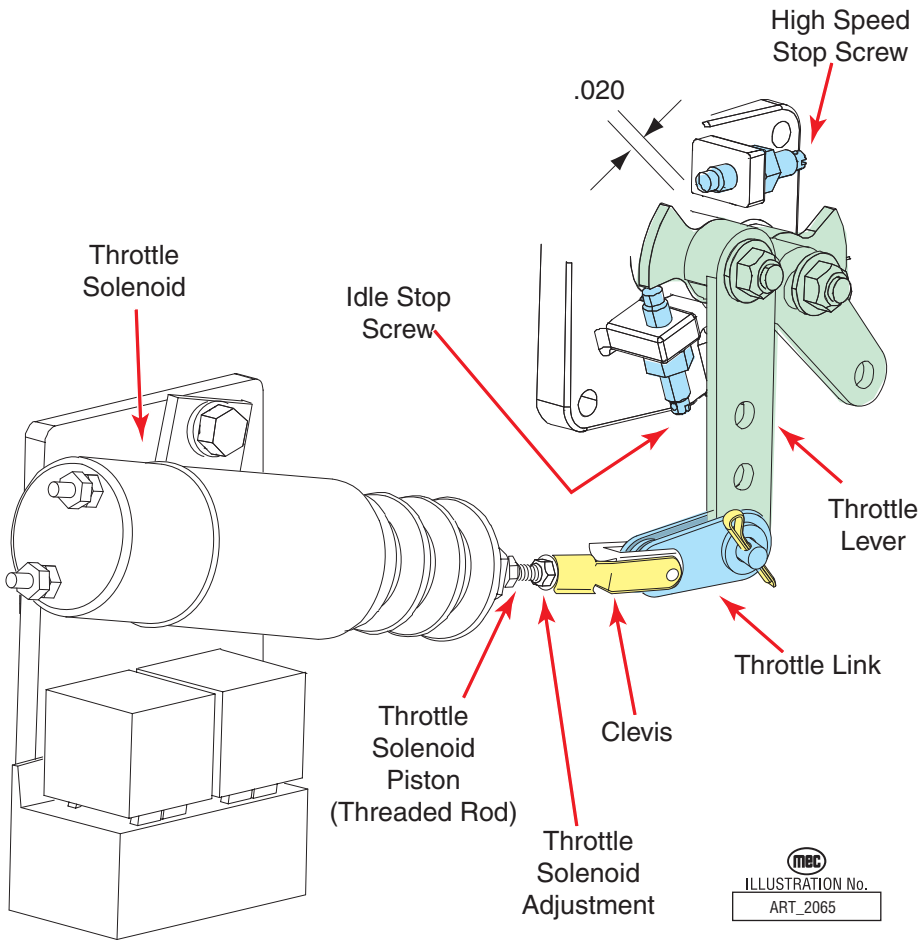

Lubrication Points

Boom Wear Pads

With the boom in the stowed position, raise the jib and extend the boom completely. Spread a thin, even coat of lithium-based grease on the areas where the wear pads rub -- top, bottom and sides of the internal sections of the boom.

Swing Bearing & Gear

1. Swing Bearing Gear: Apply small amounts of lithium-based grease to approximately every 3rd tooth of the ring gear.
2. Swing Bearing: Open the Controls Module. Locate the grease fitting at the front surface of the Auxiliary Power Unit mounting bracket.

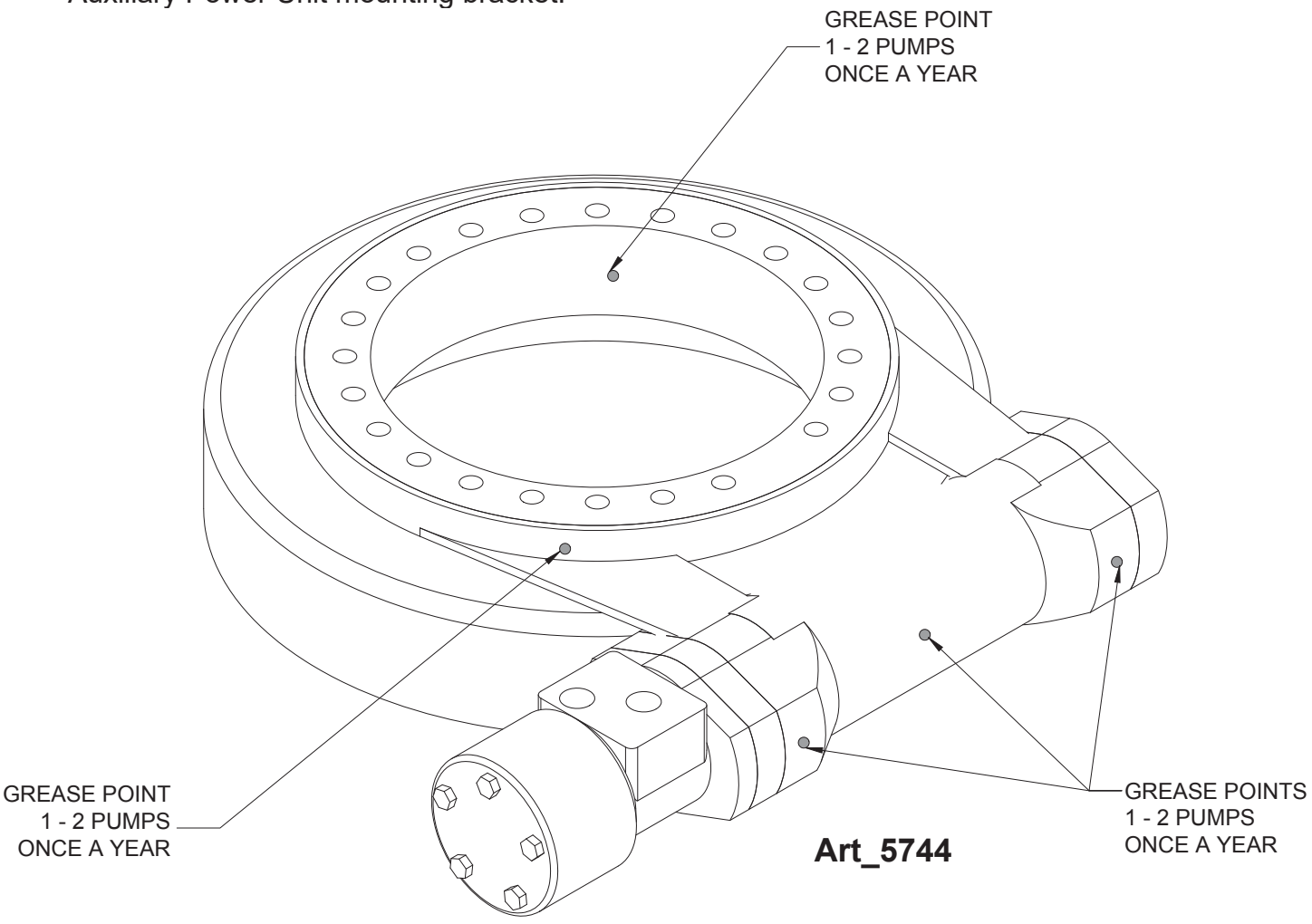

Cabinet Latches And Hinges

Apply spray lubricant to latches and hinges. Wipe off excess lubricant.

Engine

Apply spray lubricant to throttle solenoid linkage pivot points. See page 90.

General Troubleshooting Tips

Hydraulic Fluid Pump

The hydraulic Drive Pump and Primary Functions Pump used in this model are variable displacement, axial piston type pumps. Proper adjustment is critical for normal operation of the machine. Refer to Section 10 - Hydraulic System of this manual.

The Secondary Functions pump is a fixed-displacement gear-type pump attached to the rear of the Primary Functions Pump.

Common Causes of Electrical System Malfunctions:

- Battery connections are loose or corroded
- Battery is not fully charged.
- Emergency Stop buttons are pushed (OFF position).
- Circuit breaker is tripped (OFF position).

Common Causes of Hydraulic System Malfunctions:

- Hydraulic fluid level is too low.
- Incompatible hydraulic fluids mixed, destroying the additives and causing varnish build up, resulting in the valves sticking.
- Water in the hydraulic fluid due to a damp climate.
- Improper hydraulic fluid used. Viscosity too high in cold climates. Viscosity too low in warm climates.
- Hydraulic fluid contaminated with debris - filter change interval neglected.

Note: MEC uses a multiple viscosity fluid that is light enough for cold climates and resists thinning in warm climates. Use only the recommended hydraulic fluid. Substituting a lower grade fluid will cause the machine to operate incorrectly and may lead to pump and drive motor failure. Refer to “Lubrication” in Section 10 - Hydraulic System of this manual.

Note: Contamination always causes failure in any hydraulic system. It is very important to be careful not to introduce any contamination into hydraulic system during the assembly procedures. Make sure all ports and cavities of the manifold and cylinders are properly covered/plugged during maintenance activities.

Electrical System Troubleshooting

The electronic control system used on this machine was designed for low maintenance and long, trouble-free operation. The system consists of two microprocessor based modules: the GP440 Module in the upper controls box and the GP500 Processor, located in the lower controls box. They communicate through a low voltage digital signal called CAN-Bus communication.

To protect against part failure or incorrect plug connections, the modules are fully short circuit and reverse polarity protected. All electrical plug connections are waterproof to promote longer trouble free operation and to increase terminal life.

NEVER ATTEMPT TO SUPPLY BATTERY POWER, OR VOLTAGE HIGHER THAN 12 VOLTS TO ANY PART OR MODULE IN THIS SYSTEM, AS CATASTROPHIC FAILURE OF THE MODULES MAY RESULT.

WARNING

USE OF HIGH PRESSURE WASHING EQUIPMENT DIRECTLY ON THE MODULES CAN FORCE WATER INTO SEALED CONNECTION AND CAN CAUSE A TEMPORARY SYSTEM SHUT-DOWN. HIGH PRESSURE WASHING WITHIN THE VICINITY OF THE MODULES IS HIGHLY DISCOURAGED.

GP500 Module

The GP500 module is “the brains” of the system. It receives and processes a variety of inputs both from the machine and the operator, then controls all the operative functions of the machine. It also has a feature that allows the technician to access and monitor all functionality of the system, along with a technician-friendly series of fault messages that can be accessed through the use of the onboard EZ-Cal scan tool. Flash codes are also provided in case an EZ-Cal scan tool is not available.

Such information can be used for preventative maintenance and troubleshooting should a problem arise. A comprehensive list of EZ-Cal accessible information can be found later in this section.

The GP500 operates on 12 volts DC and should never be probed or operated with voltage higher than 14 volts DC.

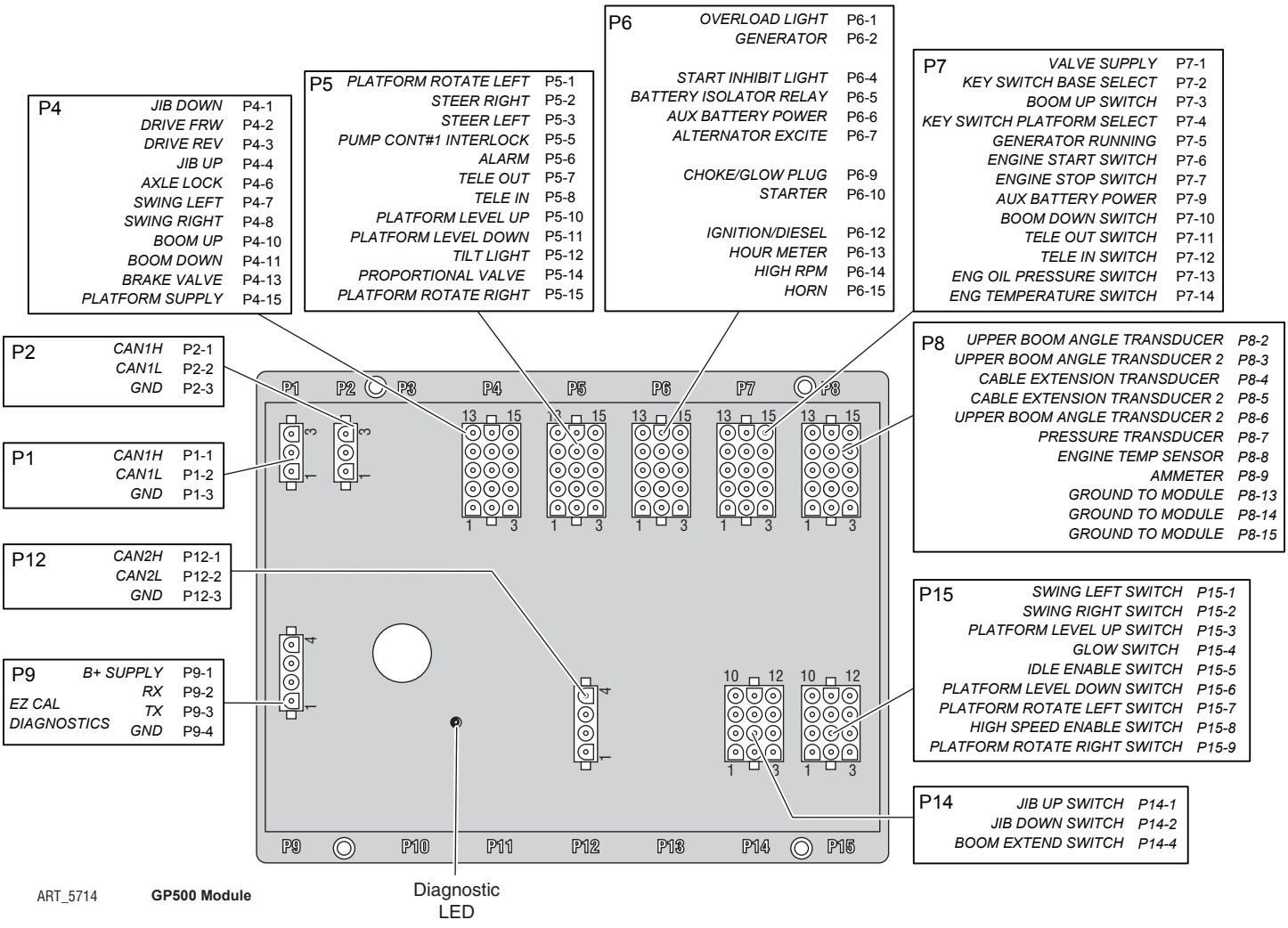

ART_5714 **GP500 Module**

Terminal Block Module

Terminal Block Module (TBM)

The Terminal Block Module (TBM) is a module inside the lower control box that provides terminal point connections for both positive and ground circuits. A signal from the Emergency Stop circuit activates a load-reduction relay within the TBM that provides ample power to the B+ (positive) terminal strip. This arrangement protects the system against voltage drop conditions that can be detrimental to the electrical system.

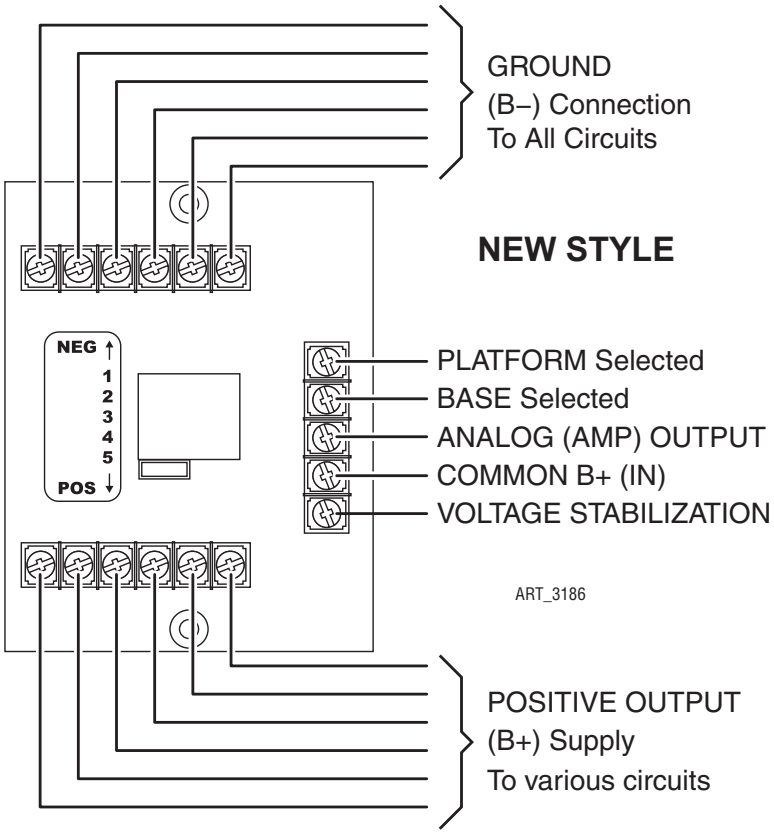

GP440 Module

The GP440 Module is the remote module located inside the upper control box. It receives inputs from the operator and relays them to the GP500.

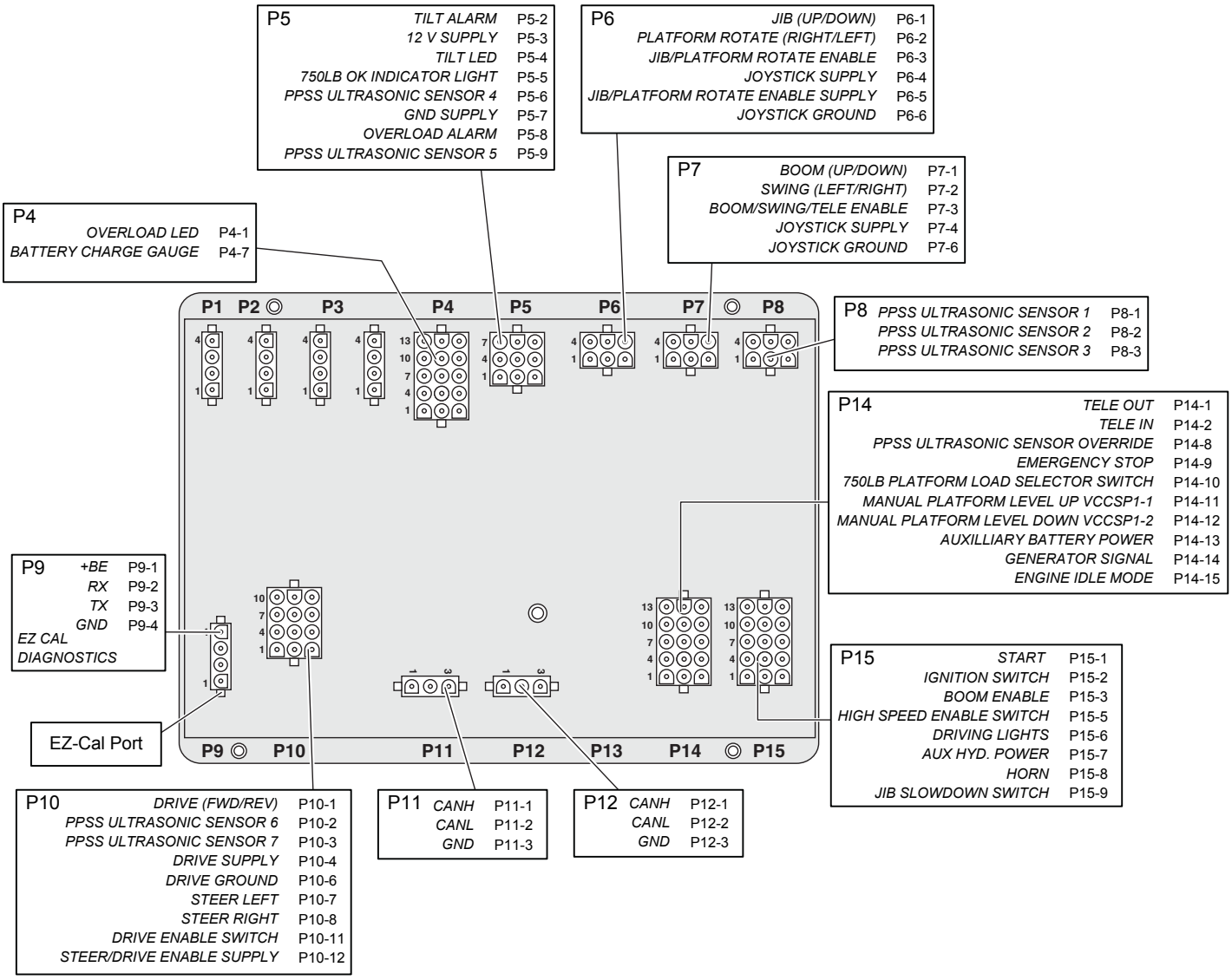

GP440 Module (inside Upper Control Box) ART_4970

EZ-Cal Scan Tools

The EZ-Cal Scan Tools interface with the machine's control system to provide system information and to allow adjustment. The EZ-Cal receives its power from the GP500 or GP440. The system must be powered up by pulling out both Emergency Stop Switches. You must also select Base or Platform depending on the station from which you will operate.

Onboard EZ-Cal Option -- Lower Controls Box

To use and operate the onboard EZ-Cal, set the Base/Platform Key switch to Base, then open the door to the Lower Controls Box. The onboard EZ-Cal scan tool provides the same functionality as the hand-held unit.

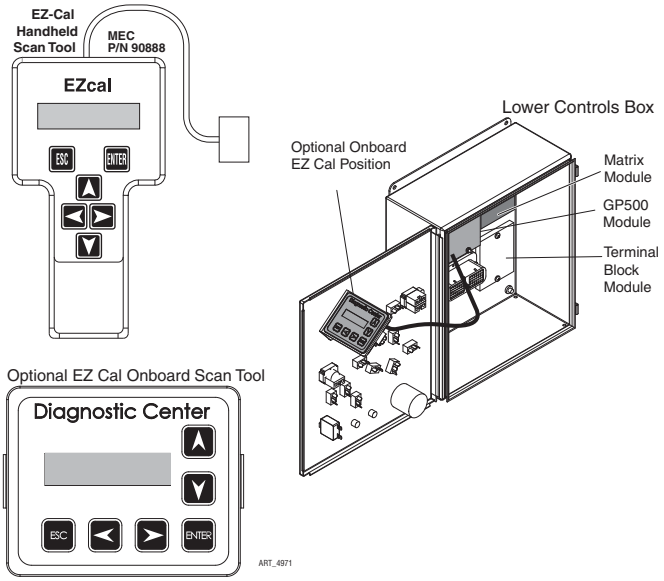

Handheld EZ-Cal -- Lower/Upper Controls Box

The handheld EZ-Cal is not provided with the machine and is available from the MEC parts department (part #90888).

To use and operate the handheld EZ-Cal at the upper controls station:

- Set the Base/Platform Key Switch to Platform
- Open the lid to the Upper Controls Box
- Plug the EZ-Cal into port P9 of the GP440 module. This plug is on the right side of the module, facing down.

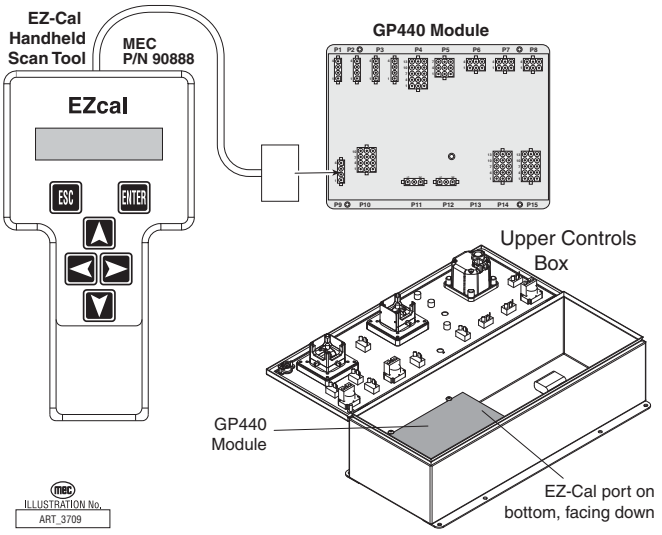

Using The EZ-Cal Scan Tool

- Once, powered up, the EZ-Cal display will illuminate and read "HELP: PRESS ENTER". From this point, use the right and left arrows to scroll through the base menus.
- Once the desired base menu is obtained (i.e. ADJUSTMENTS) press Enter to access sub menus.
- Use the right and left arrows to scroll through sub menus, then press Enter again to choose a sub menu.
- The up/down arrows are used to change settings only.
- Press ESC to back up one level.

SYMBOL	KEY FUNCTIONS
ESC ENTER	**ESC/ENTER BUTTONS** To move back and forth between menu and sub-menu
◀ ▶	**LEFT/RIGHT BUTTONS** Select menus and setting to be adjusted
▲ ▼	**UP/DOWN BUTTONS** Adjust setting values

Using The EZ-Cal With The Flow Charts

Use the EZ-Cal Flow Charts as a guide to locate diagnostic information and make adjustments. Each box in the flow chart will have 3 bits of information.

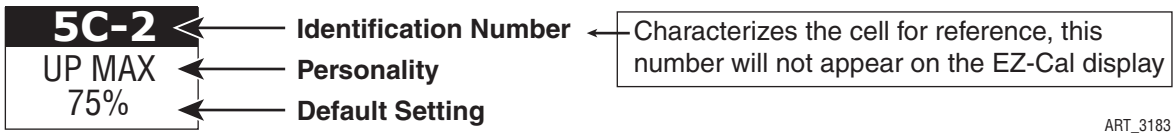

The IDENTIFIER (5c2): Used to characterize the cell for reference.

The PERSONALITY (Up Max): Identifies the individual personalities.

The DEFAULT SETTING: The factory setting. If adjustments are made, they must be returned to default setting.

WARNING

ACCESS LEVEL 1 PROVIDES ACCESS TO CHANGE PERSONALITIES NORMALLY PRESET AT THE FACTORY TO PROVIDE PROPER MACHINE MOVEMENT AT SAFE SPEEDS. PERSONALITIES MUST NOT BE CHANGED WITHOUT PRIOR AUTHORIZATION FROM MEC AND MAY ONLY BE RETURNED TO FACTORY SPECIFICATION AS LISTED IN THE FOLLOWING TABLES.

Error Messages

To obtain error messages from the EZ-Cal, access the EZ-Cal as mentioned above. The display will read, “HELP:PRESS ENTER”. Press Enter to display the current error message. If an error message is present, use the following list of error messages to better understand the fault. If an error message is not present, the display will show the last operation performed.

Pressing Enter twice will provide a log of previous errors and operations that may have occurred within recent operation. The first message will be the most recent.

Flash Codes

Flash Codes, provided from the GP500 LED, will also assist in the event an EZ-Cal is not available. However, the EZ-Cal yields considerably more relevant information. Refer to “EZ-Cal Messages” on page 102 for flash coded error messages.

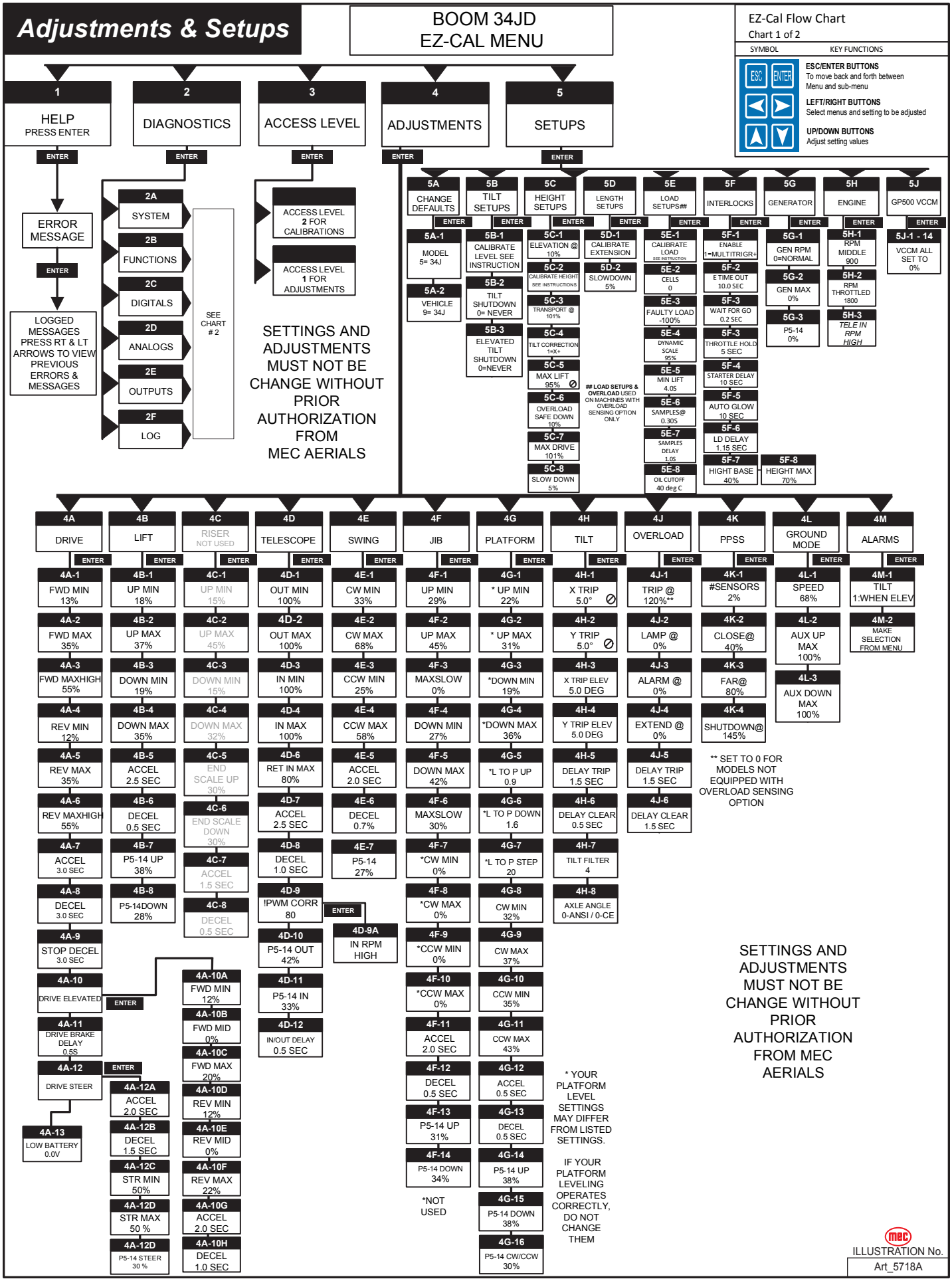
Adjustments & Setups
BOOM 34JD
EZ-CAL MENU
EZ-Cal Flow Chart
Chart 1 of 2
SYMBOL
KEY FUNCTIONS
ESC
ENTER
ESC/ENTER BUTTONS
To move back and forth between Menu and sub-menu
LEFT/RIGHT BUTTONS
Select menus and setting to be adjusted
UP/DOWN BUTTONS
Adjust setting values
1 HELP PRESS ENTER
2 DIAGNOSTICS
3 ACCESS LEVEL
4 ADJUSTMENTS
5 SETUPS
ERROR MESSAGE
LOGGED MESSAGES PRESS RT & LT ARROWS TO VIEW PREVIOUS ERRORS & MESSAGES
2A SYSTEM
2B FUNCTIONS
2C DIGITALS
2D ANALOGS
2E OUTPUTS
2F LOG
SEE CHART # 2
ACCESS LEVEL 2 FOR CALIBRATIONS
ACCESS LEVEL 1 FOR ADJUSTMENTS
SETTINGS AND ADJUSTMENTS MUST NOT BE CHANGE WITHOUT PRIOR AUTHORIZATION FROM MEC AERIALS
5A CHANGE DEFAULTS
5A-1 MODEL 5= 34J
5A-2 VEHICLE 9= 34J
5B TILT SETUPS
5B-1 CALIBRATE LEVEL SEE INSTRUCTION
5B-2 TILT SHUTDOWN 0= NEVER
5B-3 ELEVATED TILT SHUTDOWN 0=NEVER
5C HEIGHT SETUPS
5C-1 ELEVATION @ 10%
5C-2 CALIBRATE HEIGHT SEE INSTRUCTIONS
5C-3 TRANSPORT @ 101%
5C-4 TILT CORRECTION 1=X+
5C-5 MAX LIFT 95%
5C-6 OVERLOAD SAFE DOWN 10%
5C-7 MAX DRIVE 101%
5C-8 SLOW DOWN 5%
5D LENGTH SETUPS
5D-1 CALIBRATE EXTENSION
5D-2 SLOWDOWN 5%
LOAD SETUPS & OVERLOAD USED ON MACHINES WITH OVERLOAD SENSING OPTION ONLY
5E LOAD SETUPS##
5E-1 CALIBRATE LOAD SEE INSTRUCTION
5E-2 CELLS 0
5E-3 FAULTY LOAD -100%
5E-4 DYNAMIC SCALE 95%
5E-5 MIN LIFT 4.0S
5E-6 SAMPLES@ 0.30S
5E-7 SAMPLES DELAY 1.0S
5E-8 OIL CUTOFF 40 deg C
5F INTERLOCKS
5F-1 ENABLE 1=MULTITRIGR+
5F-2 E TIME OUT 10.0 SEC
5F-3 WAIT FOR GO 0.2 SEC
5F-3 THROTTLE HOLD 5 SEC
5F-4 STARTER DELAY 10 SEC
5F-5 AUTO GLOW 10 SEC
5F-6 LD DELAY 1.15 SEC
5F-7 HIGHT BASE 40%
5F-8 HEIGHT MAX 70%
5G GENERATOR
5G-1 GEN RPM 0=NORMAL
5G-2 GEN MAX 0%
5G-3 P5-14 0%
5H ENGINE
5H-1 RPM MIDDLE 900
5H-2 RPM THROTTLED 1800
5H-3 TELE IN RPM HIGH
5J GP500 VCCM
5J-1 - 14 VCCM ALL SET TO 0%
4A DRIVE
4A-1 FWD MIN 13%
4A-2 FWD MAX 35%
4A-3 FWD MAXHIGH 55%
4A-4 REV MIN 12%
4A-5 REV MAX 35%
4A-6 REV MAXHIGH 55%
4A-7 ACCEL 3.0 SEC
4A-8 DECEL 3.0 SEC
4A-9 STOP DECEL 3.0 SEC
4A-10 DRIVE ELEVATED
4A-10A FWD MIN 12%
4A-10B FWD MID 0%
4A-10C FWD MAX 20%
4A-10D REV MIN 12%
4A-10E REV MID 0%
4A-10F REV MAX 22%
4A-10G ACCEL 2.0 SEC
4A-10H DECEL 1.0 SEC
4A-11 DRIVE BRAKE DELAY 0.5S
4A-12 DRIVE STEER
4A-12A ACCEL 2.0 SEC
4A-12B DECEL 1.5 SEC
4A-12C STR MIN 50%
4A-12D STR MAX 50 %
4A-12D P5-14 STEER 30 %
4A-13 LOW BATTERY 0.0V
4B LIFT
4B-1 UP MIN 18%
4B-2 UP MAX 37%
4B-3 DOWN MIN 19%
4B-4 DOWN MAX 35%
4B-5 ACCEL 2.5 SEC
4B-6 DECEL 0.5 SEC
4B-7 P5-14 UP 38%
4B-8 P5-14DOWN 28%
4C RISER NOT USED
4C-1 UP MIN 15%
4C-2 UP MAX 45%
4C-3 DOWN MIN 15%
4C-4 DOWN MAX 32%
4C-5 END SCALE UP 30%
4C-6 END SCALE DOWN 30%
4C-7 ACCEL 1.5 SEC
4C-8 DECEL 0.5 SEC
4D TELESCOPE
4D-1 OUT MIN 100%
4D-2 OUT MAX 100%
4D-3 IN MIN 100%
4D-4 IN MAX 100%
4D-6 RET IN MAX 80%
4D-7 ACCEL 2.5 SEC
4D-8 DECEL 1.0 SEC
4D-9 !PWM CORR 80
4D-9A IN RPM HIGH
4D-10 P5-14 OUT 42%
4D-11 P5-14 IN 33%
4D-12 IN/OUT DELAY 0.5 SEC
4E SWING
4E-1 CW MIN 33%
4E-2 CW MAX 68%
4E-3 CCW MIN 25%
4E-4 CCW MAX 58%
4E-5 ACCEL 2.0 SEC
4E-6 DECEL 0.7%
4E-7 P5-14 27%
4F JIB
4F-1 UP MIN 29%
4F-2 UP MAX 45%
4F-3 MAXSLOW 0%
4F-4 DOWN MIN 27%
4F-5 DOWN MAX 42%
4F-6 MAXSLOW 30%
4F-7 *CW MIN 0%
4F-8 *CW MAX 0%
4F-9 *CCW MIN 0%
4F-10 *CCW MAX 0%
4F-11 ACCEL 2.0 SEC
4F-12 DECEL 0.5 SEC
4F-13 P5-14 UP 31%
4F-14 P5-14 DOWN 34%
*NOT USED
4G PLATFORM
4G-1 * UP MIN 22%
4G-2 * UP MAX 31%
4G-3 *DOWN MIN 19%
4G-4 *DOWN MAX 36%
4G-5 *L TO P UP 0.9
4G-6 *L TO P DOWN 1.6
4G-7 *L TO P STEP 20
4G-8 CW MIN 32%
4G-9 CW MAX 37%
4G-10 CCW MIN 35%
4G-11 CCW MAX 43%
4G-12 ACCEL 0.5 SEC
4G-13 DECEL 0.5 SEC
4G-14 P5-14 UP 38%
4G-15 P5-14 DOWN 38%
4G-16 P5-14 CW/CCW 30%
* YOUR PLATFORM LEVEL SETTINGS MAY DIFFER FROM LISTED SETTINGS.
IF YOUR PLATFORM LEVELING OPERATES CORRECTLY, DO NOT CHANGE THEM
4H TILT
4H-1 X TRIP 5.0°
4H-2 Y TRIP 5.0°
4H-3 X TRIP ELEV 5.0 DEG
4H-4 Y TRIP ELEV 5.0 DEG
4H-5 DELAY TRIP 1.5 SEC
4H-6 DELAY CLEAR 0.5 SEC
4H-7 TILT FILTER 4
4H-8 AXLE ANGLE 0-ANSI / 0-CE
4J OVERLOAD
4J-1 TRIP @ 120%**
4J-2 LAMP @ 0%
4J-3 ALARM @ 0%
4J-4 EXTEND @ 0%
4J-5 DELAY TRIP 1.5 SEC
4J-6 DELAY CLEAR 1.5 SEC
4K PPSS
4K-1 #SENSORS 2%
4K-2 CLOSE@ 40%
4K-3 FAR@ 80%
4K-4 SHUTDOWN@ 145%
** SET TO 0 FOR MODELS NOT EQUIPPED WITH OVERLOAD SENSING OPTION
4L GROUND MODE
4L-1 SPEED 68%
4L-2 AUX UP MAX 100%
4L-3 AUX DOWN MAX 100%
4M ALARMS
4M-1 TILT 1:WHEN ELEV
4M-2 MAKE SELECTION FROM MENU
SETTINGS AND ADJUSTMENTS MUST NOT BE CHANGE WITHOUT PRIOR AUTHORIZATION FROM MEC AERIALS
ILLUSTRATION No.
Art_5718A

DIAGNOSTIC

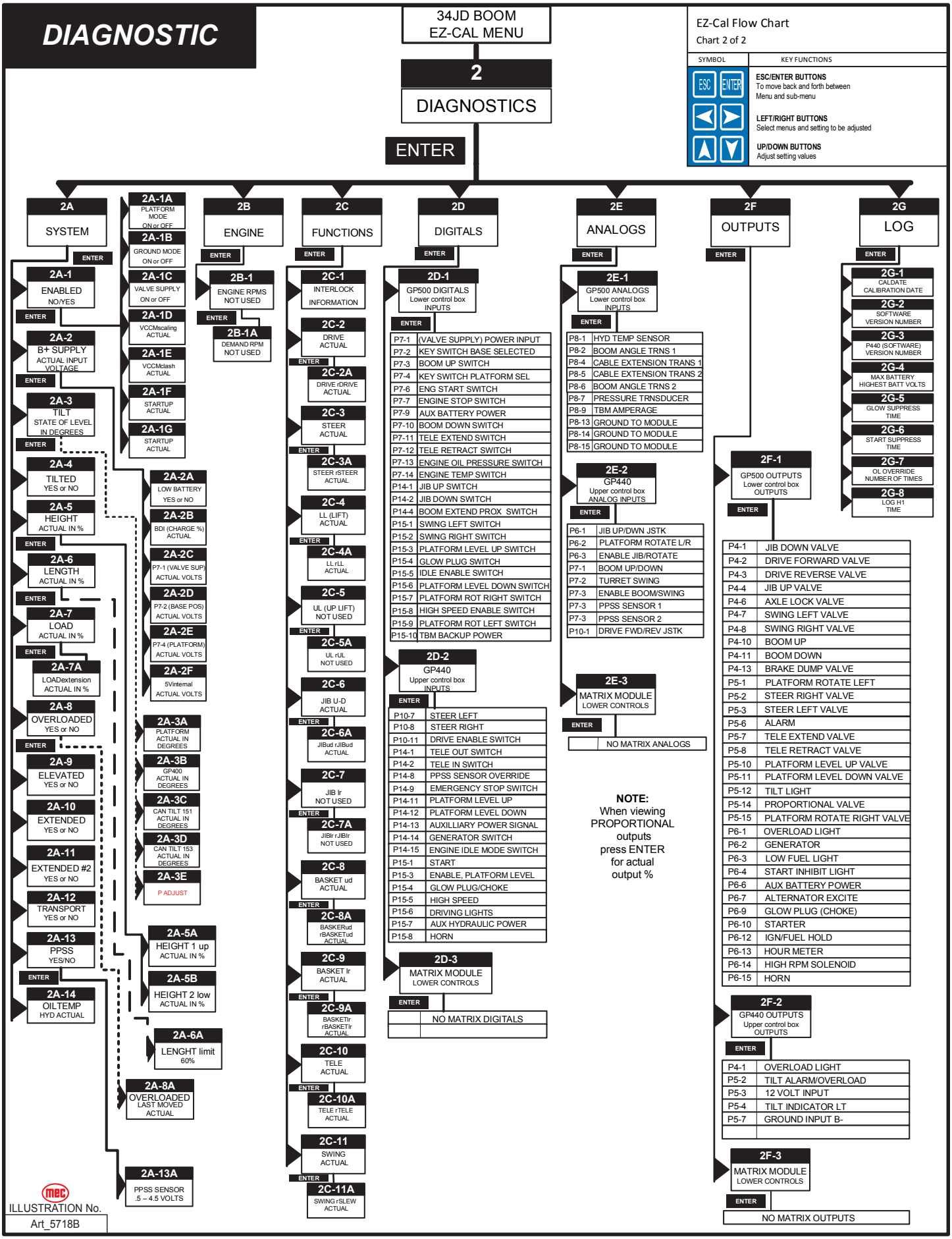

ILLUSTRATION No.
Art_5718B

EZ-Cal Messages

“Help Messages” will appear on the EZ-Cal scan tool as a means of explaining operating and non-operating function(s) and system errors or interruptions that are accompanied by flash codes. It can also be used for verifying system operation. Refer to the EZ-Cal Instruction page for additional help with EZ-Cal operation.

To access messages, power the system up, (it is not necessary to have the engine running) the EZ-Cal display will illuminate and read “HELP - PRESS ENTER”. Press ENTER to view current message. Press ENTER a second time then use right and left arrow buttons to access up 30 logged messages from the memory. Many messages simply detail operations being performed by the GP500; other messages detail occurrences that also take place during operation either normal or may be symptomatic of a malfunction.

Operational Messages

The following messages appear as result of normal operation and usually do not represent a problem.

EVERYTHING OK_____ Flash Code: None
- All circuits performing properly, no current operation performed.

GROUND MODE ACTIVE_____ Flash Code: None
- Base/Platform selector switch set to base control station.

STARTUP_____ Flash Code: None
- GP500 performing start up procedure, normally a short sequence.

MOVING FRAME_____ Flash Code: None
- Chassis level in progress.

MOVING PLATFORM_____ Flash Code: None
- Platform level in progress.

TELESCOPING_____ Flash Code: None
- Boom extend/retract (telescope) in progress.

LIFTING_____ Flash Code: None
- Boom lift up in progress.

LOWERING_____ Flash Code: None
- Boom Lower down in progress.

DRIVING_____ Flash Code: None
- Drive forward or reverse in progress.

VEHICLE TILTED_____ Flash Code: None
- Chassis is tilted beyond pre-set maximum. Use auto-level feature to level chassis or re-position the machine.

Can Bus Related Messages

CAN bus communication system is the network by which the control modules and CAN Tilt modules communicate with the GP500.

NO DATA FROM CAN TILT #1_____ Flash Code: None

- CAN Tilt module mounted to front of main boom (located behind panel, Left Module) has malfunctioned or wiring is damaged.

NO DATA FROM CAN TILT #2_____ Flash Code: None

- CAN Tilt module mounted to Front axle has malfunctioned or wiring is damaged.

NO DATA FROM CAN TILT #3_____ Flash Code: None

- CAN Tilt module mounted to front of main boom (located behind panel, Right Module) has malfunctioned or wiring is damaged.

NO DATA FROM CAN TILT #4_____ Flash Code: None

- CAN Tilt module mounted to Rear axle has malfunctioned or wiring is damaged.

FAULT: CAN BUS!_____ Flash Code: 6/6

- The CAN bus cable may be damaged or disconnected from one or more of the modules. All modules must be connected to the CAN bus for machine operation.

Calibration Related Messages

The following messages appear when the GP500 microprocessor has not been calibrated or was improperly calibrated.

FACTORY OVERRIDE_____ FAST FLASH

- GP500 is shipped in this condition to allow temporary operation of the machine without interruption from the safety system so that calibration procedures can be performed. The GP500 must be prepared for the machine to which it will be installed, including calibration and Customer/ model selection. See “GP500 Setup” for instructions. Once Calibrated, Factory Override is gone forever.

WARNING

ALL SAFETY SETTINGS ARE INACTIVE WHEN THE GP500 IS IN FACTORY OVERRIDE, NEVER OPERATE MACHINE IN FACTORY OVERRIDE EXCEPT TO CALIBRATE THE GP500.

NOT CALIBRATED_____ Flash Code: 1/1

- The GP 500 microprocessor has not been calibrated. Operation will be restricted until calibration is completed. Refer to “Set up procedures” in this section for calibration information and instructions.

HEIGHT NOT CALIBRATED_____ Flash Code: 1/1

- The Height portion of the calibration has not been completed. Operation will be restricted until calibration is completed. Refer to “Set up procedures” in this section for calibration information and instructions.

FUNCTIONS LOCKED - NOT CALIBRATED_____ Flash Code: 1/1

- The GP 500 microprocessor has not been calibrated. Operation will be restricted until calibration is completed. Refer to “Set up procedures” in this section for calibration instructions.

FAULT: CUSTOMER_____ Flash Code: 1/1

- Customer vs. Model settings not correct. Using the EZ-Cal, go to SETUPS/CHANGE DEFAULTS/CUSTOMER to correct. Changing customer or model will require access level 1 code. NOTE: all adjustments and settings return to default value when Customer or Model is changed, ensure proper settings and adjustments after changing Customer or Model.

Interlock Messages

The following messages appear as result of perceived improper operation, machine positioning, or other incorrect operation. Interlock messages may be the result of a part failure if the part in question provides incorrect information to the GP500.

FUNCTIONS LOCKED - LIMIT REACHED_____ Flash Code: 2/2

- Rotating platform not centered; Certain operations require centered platform Rotating platform at extreme CW or CCW; no further rotation possible in that direction

FUNCTIONS LOCKED - TEST MODE SELECTED_____ Flash Code: 2/2

- Calibration in progress or internal test mode active. Cycle EMS to clear.

FUNCTIONS LOCKED - OUTRIGGERS_____ Flash Code: 2/2

- Stabilizers must be set before operation is allowed.

FUNCTIONS LOCKED - OVERLOADED_____ Flash Code: 2/2

- Platform overloaded - reduce weight in platform until alarms stop (Overload option only)

FUNCTIONS LOCKED - UNDERLOADED_____ Flash Code: 2/2

- Overload system detects less then normal lift cylinder pressure. Platform resting atop a fixed object, possible pressure switch failure or not calibrated correctly.

FUNCTIONS LOCKED - TILTED_____ Flash Code: 2/2

- Platform sensors indicate platform out of level; level platform or chassis until alarm stops or re-position machine

FUNCTIONS LOCKED - AUTO PLATFORM LEVEL_____ Flash Code: 2/2

- Auto Platform Level operation running, wait until completed to operate other functions.

FUNCTIONS LOCKED - TOO HIGH_____ Flash Code: 2/2

- Elevation sensor indicating elevation beyond 98%. Height Calibration performed incorrectly; Angle Transducer loose or remounted incorrectly or extend proximity switch/s failure. Use EZ-Cal in conjunction with EZ-Cal Flow Charts to identify GP500 or GP440 for sensor's inputs to check sensor readings.

FUNCTIONS LOCKED - EXTERNAL SHUTDOWN_____ Flash Code: 2/2

- Boom not retracted or axle/s off level. Boom must be retracted to allow frame level, drive or outrigger operation. Axles must be centered before drive is allowed when the platform is elevated. Also, drive will be interrupted if Stabilizer pressure sensor output is below 0.2 volts (possible sensor failure or sensor wiring issue).

CHECK DRIVE/STEER SWITCHES_____ Flash Code: 2/2

- Drive joystick output without enable or during power up. Check drive joystick analog output and steer switch digital output using the EZ-Cal.

CHECK LIFT SWITCHES_____ Flash Code: 2/2

- Lift joystick or toggle switch movement without enable or during power up. Check joystick analog output using the EZ-Cal.

CHECK PLATFORM SWITCHES_____ Flash Code 2/2

- Platform Rotate/slide joystick or toggle switch movement without enable or during power up. Check joystick analog output and switch digital outputs using the EZ-Cal.

CHECK TELE SWITCHES_____ Flash Code 2/2

- Telescope joystick or toggle switch movement without enable or during power up. Check joystick analog output and switch digital output using the EZ-Cal.

RELEASE ENABLE SWITCH_____ Flash Code 2/2

- One or more enable switches activated for extended period of time without corresponding function or during start up. Check enable switches digital outputs using the EZ-Cal.

Other Messages

The following messages are the result of various possible failures or occurrences which may result in machine interruption.

FUNCTIONS LOCKED - NO VALVE SUPPLY!_____ Flash Code 2/3

- GP500 detects no power on P7-1 of the GP500. Check wiring to plug connection; possible GP500 internal failure.

FAULT: ENERGIZED VALVE_____ Flash Code: 3/2

- Power on valve output wire at GP500 plugs P4, P5 or P6. Unplug these connectors and cycle E-stop switch to clear code. Plug in one-at-a-time until code reappears then isolate the circuit (with voltage) within that plug. If code does not clear, possible GP500 failure. EZ-Cal not useful for this procedure.

FAULT: VALVE FEEDBACK HIGH!_____ Flash Code: 3/2

- On start-up GP500 p-5 pin voltage incorrect, check P5-X wiring for voltage feed back. Possible GP500 internal fault

FAULT: BAD INTERNAL SAFETY SWITCH!_____ Flash Code: 3/4

- At startup, internal feedback of output incorrect, possibly failed output driver; check wiring to P6-12/13/14/15; possible GP500 internal failure

FAULT: LOW OIL PRESSURE!_____ Flash Code: 4/1

- Oil pressure switch opened during operation or time out. Check oil pressure, pressure switch, wiring. Message will appear if engine stops running for reasons other then normal shut down.

FAULT: BAD INTERNAL SLAVE!_____ Flash Code: 4/2

- Malfunction within the GP500 possibly caused by a short circuit in the wiring or high voltage surge. Replace GP500

FAULT: BAD INTERNAL 5 VOLTS!_____ Flash Code: 4/2

- 5 volt circuit that provides voltage to sensors had failed. Possible short in the wiring or high voltage surge on supply.

FAULT: BATTERY VOLTAGE TOO LOW!_____ Flash Code: 4/4

- Charge battery and battery connections, check charging system and voltage source connections.

FAULT: BATTERY VOLTAGE TOO HIGH!_____ Flash Code: 4/4

- GP500 input voltage should be 12 volts. Check battery and battery connections, alternator output.

FAULT: CHECK HEIGHT 2 SENSOR!_____ Flash Code 6/1

- Height 2 sensor output over 4.5 volts or under .5 volts. Check height 2 sensor output using the EZ-Cal (height 2 sensor on CE option only). Possible sensor failure or wire connection failure.

FAULT: CHECK HEIGHT 1 SENSOR!_____ Flash Code 6/1

- Height 1 sensor output over 4.5 volts or under .5 volts. Check height 1 sensor output using the EZ-Cal. Possible sensor failure or wire connection failure.

FAULT: CHECK HEIGHT SENSORS!_____ Flash Code 6/1
- Voltage from Height sensors out of range, should be .5 volts to 4.5 volts

FAULT: CHECK PRESSURE SENSOR!_____ Flash Code 6/2
- Voltage from Pressure sensor out of range, should be .5 to 4.5 volts (Overload option only).

FAULT: CHECK ELEVATION SWITCH!_____ Flash Code 6/3
- Check for incorrect GP 500 part.

FAULT: LOW OIL PRESSURE!_____ _ Flash Code 7/7
- Engine Start was pushed but engine did not start or oil pressure switch did not close.
- Engine Oil Pressure is low. Check oil level.

FAULT: SOME BIG BAD PROBLEM!_____ Flash Code 9/9
- A failure happened that has no message associated with it. This should never occur.

Troubleshooting Chart

The following chart describes the possible causes for inoperation of the different functions of this machine. The Causes and Solutions columns list various points of references that can be found in the Hydraulic, Electrical, Schematics and Troubleshooting sections of this manual.

The majority of electrical troubleshooting on this model will require the use of the onboard EZ-Cal scan tool, located inside the lower control box door. Please refer to “EZ-Cal Scan Tools” on page 98 for further instructions on the use of the EZ-Cal scan tool.

Perform a full assessment of machine operations prior to troubleshooting this model and using this chart. This model is operated by a Microprocessor Control System equipped with a variety of built-in safety interlocks to prevent continued operation in the event of a failure or misoperation. Some interlocks may only be detected through the use of the EZ-Cal.

Problem	Possible Cause	Remedy/Solution
General Power Issue		
No operation from upper or lower control station. No LEDs on modules.	Emergency stop switch pushed in or ignition switch turned off or faulty switches	Lower E-stop switch and ignition switch will cut all power. Upper E-stop will cut only upper power as will the ignition switch in platform control box.
	Battery discharged or faulty cables	Will receive 4-4 or 7-7 flash on GP500. Clean, service and charge battery. Repair cables.
	Circuit breaker tripped	Located in lower control box. Look for short circuit and/or damage in wiring or high amperage draw at valve coils or engine actuators.
	Faulty Terminal Block Module (TBM)	Located inside the lower control box. Initiates all power when signaled by the key switch. Check for loose terminals. Terminal 4 is Common power from Circuit breaker. Terminals 1 and 2 are signals to close the relay.
No operation from upper or lower control station Module LEDs on or flashing	Flash codes are the GP500’s indication of a fault in the system.	Refer to flash code designation in this section of the manual or plug in an EZ-Cal scan for more relevant information relating to the failure. See EZ-Cal Instructions for more information.
	Starter Relay or Starter failure	Test for signal and Common power to Starter Relay. Check fuse for Common power to relay. Test Starter.
Operates from lower controls but not from upper controls. No LEDs when in Upper control position.	Base/Platform select switch not in Platform position or switch malfunction	Ensure that the switch is in the Platform position. Check switch function.
	Damaged or loose harness connections to upper control box	Check for power inside the upper control box on E-stop switch and at Buss Module. Check for presence of ground on the Ground Buss Module. Repair connections.
	Malfunctioning GP440 Module (Module inside the upper control box)	Check help messages using the EZ-Cal tool. Also check for joystick inputs (see 2C2 and 2D2 Diagnostic Chart for inputs from GP440).
	System interlock	Check EZ-Cal HELP messages for interlock

Problem	Possible Cause	Remedy/Solution
Engine Related Issues		
Starter will not crank from upper or lower stations	Battery discharged or faulty cables	Will receive 4-4 flash on GP500. Clean, service and charge battery. Repair cables.
	Malfunctioning start relay or fuse	Test/replace relay located on left hand side of engine and fuse located near starter
	Malfunctioning starter	Test/replace starter
	Faulty start switch either location	Test/replace as necessary
	Starter interrupt system initiated	Check for red “Start Disable” light on lower panel. Starter may be operated for 10 seconds before a 30 second “cool down” is initiated.

Problem	Possible Cause	Remedy/Solution
Engine Related Issues		
7-7 Flash code on GP500	Indicates an attempt to start was sent by the GP500 but the oil pressure switch did not close.	Check all the above
Starter cranks but engine will not start	Low fuel reservoir	Check/fill fuel reservoir. Fuel system requires air purge after loss of fuel.
	Air trapped in the fuel system	Purge air from the fuel system (see Section 18 - Mechanical Components for instructions). Check fuel reservoir level or for leaks in the fuel hoses.
	Restriction in the fuel system	Replace Fuel Filter. Check fuel supply hoses
	Malfunctioning fuel solenoid	Check/replace fuel solenoid located on the top of the injection pump.
	Malfunctioning glow plugs (cold climates)	Test/ replace grid heater relay, fuse and grid heater
	Obstructed air filter	Clean/replace air filter.
	Contaminated fuel	Test/replace fuel
	Other engine issues	See engine manufacturers troubleshooting guide
No high throttle	Malfunctioning throttle controller, solenoid or blown fuse	Test/replace throttle controller and/or throttle solenoid and fuse
	Restriction in the fuel system	Replace Fuel Filter. Check fuel supply hoses
	Obstructed air filter	Clean/replace air filter.
	Other engine issues	See engine manufacturers troubleshooting guide

Problem	Possible Cause	Remedy/Solution
Boom Lift/Lower		
Platform will not raise	Excessive weight on platform	Reduce weight to within platform capacity
	Machine out of level (platform elevated above 10')	Indicator light will be illuminated and alarm will sound off. Reposition machine to level ground.
	Main relief valve (25) out of adjustment	Adjust Main relief valve (25) to rated platform capacity located on function manifold - see Hydraulic Section.
	Lift valve (5) not energized	Check wiring to lift valve. Check for EZ-Cal message or flash code
	Lift valve (5) not shifting	Clean debris. Check for damage/replace.
	Relief Valve (14) dump valve not energized	Check wiring to valve. Check EZ-Cal ref. P5-14 for output.
	Relief Valve (14) load sense dump not shifting	Clean debris. Check for damage/replace.
	Main system pressure inadequate	Check pump output flow and pressure
	Lift/Lower joystick inoperative	Check Joystick output using EZ-Cal ref. 2E2-2 & P7-1
		P7-1 for analog joystick output signal
	Battery discharged - no charge output	Check battery voltage, alternator output (14.5 volts) Check GP500 for 4-4 flash code.
	System interlock	Check EZ-Cal HELP messages for interlock
Platform will not lower or lowers slowly	Lowering valve (5) not energized	Check wiring to lowering valve located inside control module - see Hydraulic section for location.
	Lowering valve (5) not shifting	Clean debris. Check for damage/replace.
	System interlock	Check EZ-Cal HELP messages for interlock
	Main system pressure inadequate	Check pump output flow and pressure
Emergency lowering not working	Battery discharged, not charging	Check/charge battery. Check charge Isolator relay and fuse. Check alternator output (14.5 volts)
	Auxiliary power unit malfunction	Check APU located beside lower control box
	Emergency Down switch failure	Check/replace switch.
	Lowering valve (5) not shifting	See "Platform will not lower or lowers slowly"
	Counterbalance Valve (on lift cylinder) not adjusted correctly	Contact Factory Technical Support for instructions for counterbalance valve adjustment
	System interlock	Check EZ-Cal HELP messages for interlock

Problem	Possible Cause	Remedy/Solution
Boom Extend/Retract		
No boom extension	Excessive weight on platform	Reduce weight to within platform capacity
	Level sensor out of level (platform elevated above 10')	Indicator light will be illuminated and alarm will sound off. Reposition machine to level ground
	Main relief valve (25) out of adjustment	Adjust Main relief valve (25) to rated platform capacity located on function manifold - see Hydraulic Section.
	Solenoid Valve (8) (dump valve) not energized	Check wiring to valve. Check EZ-Cal ref. P5-7 for output
	Ext/Retract valve (10) not energized	Check wiring to valve. Check for EZ-Cal message or flash code.
	Extend/Retract valve (10) not shifting	Clean debris. Check for damage/replace.
	Ext/Retract switch inoperative	Check switch output using EZ-Cal ref. 2D-2, P14-1 & P14-2 for upper control digital output signal
	Battery discharged - no charge output	Check battery voltage, alternator output (14.5 volts). Check GP500 for 4-4 flash code.
	System interlock	Check EZ-Cal HELP messages for interlock
Boom extends/retracts slow	Excessive weight on Platform	Reduce weight to within platform capacity
	Main relief valve (25) out of adjustment	Adjust Extend relief valve (see Hydraulics Section) located on function manifold.
	Extend/Retract valve (10) not shifting completely	Clean debris. Check for damage/replace.
	Extend Speed adjustment reduced in GP500 Processor	Use the EZ-Cal and check/adjust setting. See ADJUSTMENTS/TELESCOPE OUT MAX
No boom retract	Main relief valve (25) out of adjustment	Adjust Main relief valve (25) to rated platform capacity located on function manifold - see Hydraulic Section.
	Foreign debris stuck in boom slide pads	Inspect/clean slide pads.
	Solenoid Valve (8) (dump valve) not energized	Check wiring to valve. Check EZ-Cal ref. P5-7 for output.
	Ext/Retract valve (10) not energized	Check wiring to lift valve. Check for EZ-Cal message or flash code.
	Extend/Retract valve (10) not shifting	Clean debris. Check for damage/replace.
	Ext/Retract joystick inoperative	Check joystick output using EZ-Cal ref. 2D-2, P14-1 & P14-2 for upper control analog output signal.
	Battery discharged - no charge output	Check battery voltage, alternator output (14.5 volts). Check GP500 for 4-4 flash code.
	System interlock	Check EZ-Cal HELP messages for interlock

Problem	Possible Cause	Remedy/Solution
Platform Auto-Level		
Platform will not remain level while elevating or lowering platform (level cylinder not moving at all)	Platform Level solenoid (4.1) valve not energized	Check wiring to valve. Check output from GP500 P5-10 (UP) and P5-11 (DOWN).
	Platform Level solenoid valve (4.1) sticking	Remove valve and inspect for debris or damage. Replace valve located up on the side of the boom.
	Counterbalance valve faulty	Valve must not be tampered with. Replace valve.
	Flow Compensator valve (2) not shifting	Clean debris. Check for damage/replace.
Platform will not remain level while elevating or lowering platform (level cylinder moving too slow or fast)	Excessive weight on Platform	Reduce weight to within platform capacity
	Main relief valve (25) out of adjustment	Adjust main relief valve (see Hydraulics Section) located on function manifold.
	Platform Level solenoid valve (4.1) not shifting completely	Clean debris. Check for damage/replace.

Problem	Possible Cause	Remedy/Solution
Platform Auto-Level		
Platform will not remain level while elevating or lowering platform (level cylinder moving too slow or fast)	Flow Compensator valve (2) not shifting completely	Clean debris. Check for damage/replace.
	Adjustments in GP500 incorrect	Refer to Adjustments Flow Chart column 4G for settings that will allow leveling to be close then make slight changes until operating correctly. Contact MEC Technical Support for assistance if needed.
	Pump faulty	Test/replace pump

Problem	Possible Cause	Remedy/Solution
Platform Manual Level		
Platform level operates automatically but not manually	Platform Level toggle switch inoperative	Check output from toggle using EZ-Cal. See I.D.# 2D-1, P15-3 (up) P15-6 (down) for lower control operation or 2D-2, P14-11 (up) or P14-12 (down) from upper controls.
	System Interlock	Check EZ-Cal HELP message for interlock

Problem	Possible Cause	Remedy/Solution
Turntable Rotate		
Turntable will not rotate either direction	Turntable Rotate joystick inoperative	Check joystick output using EZ-Cal. See 2E2 P7-2 for signal.
	Rotate Valve (12) not energizing.	Check wiring to valve Check GP500 output using EZ-Cal. See 2F1 P4-7 (left) and P4-8 (right).
	Rotate valve (12) not shifting.	Clean debris. Check for damage/replace.
	Internal damage or failure of rotator	Inspect/clean/repair
	System interlock	Check EZ-Cal HELP messages for interlock
Turntable will rotate in one direction only	Rotate Valve (12) not energizing	Check wiring to valve
	Rotate valve (12) not shifting	Clean debris. Check for damage/replace.
	Mechanical interference in rotator	Inspect, clean or repair
	System interlock	Check EZ-Cal HELP messages for interlock
	Output Settings Too Low	Increase swing CW Max and CCW Max to improve Rotate Speeds.

Problem	Possible Cause	Remedy/Solution
Platform Rotate		
Platform will not rotate either direction	Platform Rotate joystick inoperative	Check joystick output using EZ-Cal. See 2D2 P6-2 for signal.
	Rotate Valve (4-3) not energizing	Check wiring to valve Check GP500 output using EZ-Cal. See 2F1 P5-1 (left) and P5-15 (right)
	Rotate valve (4-3) not shifting	Clean debris. Check for damage/replace.
	Internal damage or failure of rotator	Inspect, clean or repair
	Flow Compensator valve (2) not shifting	Clean debris. Check for damage/replace.
	System interlock	Check EZ-Cal HELP messages for interlock
Platform will rotate in one direction only	Rotate Valve (4-3) not energizing	Check wiring to valve
	Rotate valve (4-3) not shifting	Clean debris. Check for damage/replace.
	Mechanical interference in rotator	Inspect, clean or repair
	System interlock	Check EZ-Cal HELP messages for interlock

Problem	Possible Cause	Remedy/Solution
Drive		
No drive operation	Planetary hub bypass engaged	Check bypass plates located in the center of each planetary hub. Should be convex. Turn over if not.
	System interlock	Check EZ-Cal HELP messages for interlock
	Hydraulic oil incorrect for severe low temperatures	Use hydraulic tank warmer if equipped. Operate drive continuously until drive begins to operate.

Problem	Possible Cause	Remedy/Solution
Drive		
No drive operation	Drive Valve (on drive pump) not energized	Check Drive output from GP500 2FI, P4-2 (FWD) and P4-3 (REV). Check for power at valve coils located on top of the drive pump.
	Drive Valve (on drive pump) not shifting	Check drive valve for contamination
	Brakes not releasing (system under pressure when drive attempted)	Check brake valve and brake pressure. See hydraulic diagram for location.
	Drive joystick output failure	Check drive joystick output from GP500 (see 2E2, P10-1) check joystick enable trigger operation, Check wire connections.
	Low pump charge pressure	Check at brake manifold port GCP (see hydraulic Diagram). Adjust stand-by pressure to 300 PSI (21 bar).
	Incorrectly adjusted or worn hydraulic drive pump	See Hydraulics Section for pump adjustment. Inspect or replace pump.
No drive with platform elevated **CE rated models	Unit out of level	Lower boom and operate on more level surfaces.
	FWD MIN, REV MIN setting incorrect	Reset drive speeds using EZ-Cal
	Hydraulic oil incorrect for severe low temperatures	Use hydraulic tank warmer if equipped. Operate drive continuously until drive begins to operate.
	Low pump charge pressure	Check at brake manifold port GCP (see hydraulic Diagram). Adjust stand-by pressure to 300 PSI (21 bar).
	System interlock	Check EZ-Cal HELP messages for interlock
	Axles not parallel	Reposition machine on flat ground
Slow drive with platform in stowed position and boom retracted	Slow engine RPM.	Check throttle solenoid.
	Hydraulic oil incorrect for severe low temperatures	Use hydraulic tank warmer if equipped. Operate drive continuously until drive begins to operate.
	Low pump charge pressure	Check at brake manifold port GCP (see hydraulic Diagram). Adjust stand-by pressure to 300 PSI (21 bar).
	FWD MAX, REV MAX setting incorrect	Reset drive speeds using EZ-Cal
	Wheel motor not functioning correctly	Inspect wheel motors for damage or wear.
Poor grade-ability or drive performance	Wheel motor not functioning correctly	Inspect wheel motors for excessive bypass or shift not working properly
	Hydraulic oil incorrect for severe low temperatures	Use hydraulic tank warmer if equipped. Operate drive continuously until drive begins to operate.
	Planetary hub bypass engaged	Check bypass plates located in the center of each planetary hub. Should be convex. Turn over if not.
	Low pump charge pressure	Check at Brake/Axle manifold, should be 300 PSI (21 bar). Adjust charge pressure to 300 PSI (21 bar).
	Incorrectly adjusted or worn hydraulic drive pump	See Hydraulics Section for pump adjustment. Inspect or replace pump.
Drive in one direction only	Drive valve not energizing in one direction	Check 12 volts to coil. Check coil. Check valve function (located on top of drive pump).
	No output from GP500 Module	Check output from GP500 2FI, P4-2 (FWD) and P4-3 (REV)
	Drive joystick output failure	Check drive joystick output from GP500 (see 2E2, P10-1)

Problem	Possible Cause	Remedy/Solution
Steer		
No steer in either direction	Joystick rocker switch inoperative	Check continuity through micro-switch inside joystick handle using wires outside the handle. Check output (see EZ-Cal 2D2, P10-7 and P7-8).
	Steering valve 11 inoperative	Check steering valve for power. Check for damage and contamination. Check output from GP500 (see EZ-Cal ID # 2F1 P5-2 and P5-3). Inspect/ replace steering valve.
	Hoses connected incorrectly	See Hydraulic Section for correct connection.
	System interlock	Check EZ-Cal HELP messages for interlock
Steer in one direction only	Joystick rocker switch inoperative	Check continuity through micro-switch inside joystick handle using wires outside the handle. Check output (see EZ-Cal 2D2, P10-7 and P7-8).
	Steering valve 11 inoperative	Check steering valve for power. Check for damage and contamination. Check output from GP500 (see EZ-Cal ID # 2F1 P5-2 and P5-3). Inspect/ replace steering valve.
	System interlock	Check EZ-Cal HELP messages for interlock
Will steer but not fully or slow steering	One or both steering cylinder internal seal failure	Check/replace steering cylinder seals.
	King pin/s seizing in the bore	Disassemble and inspect. Replace bushings.

Electrical Schematic - Lower Schematic

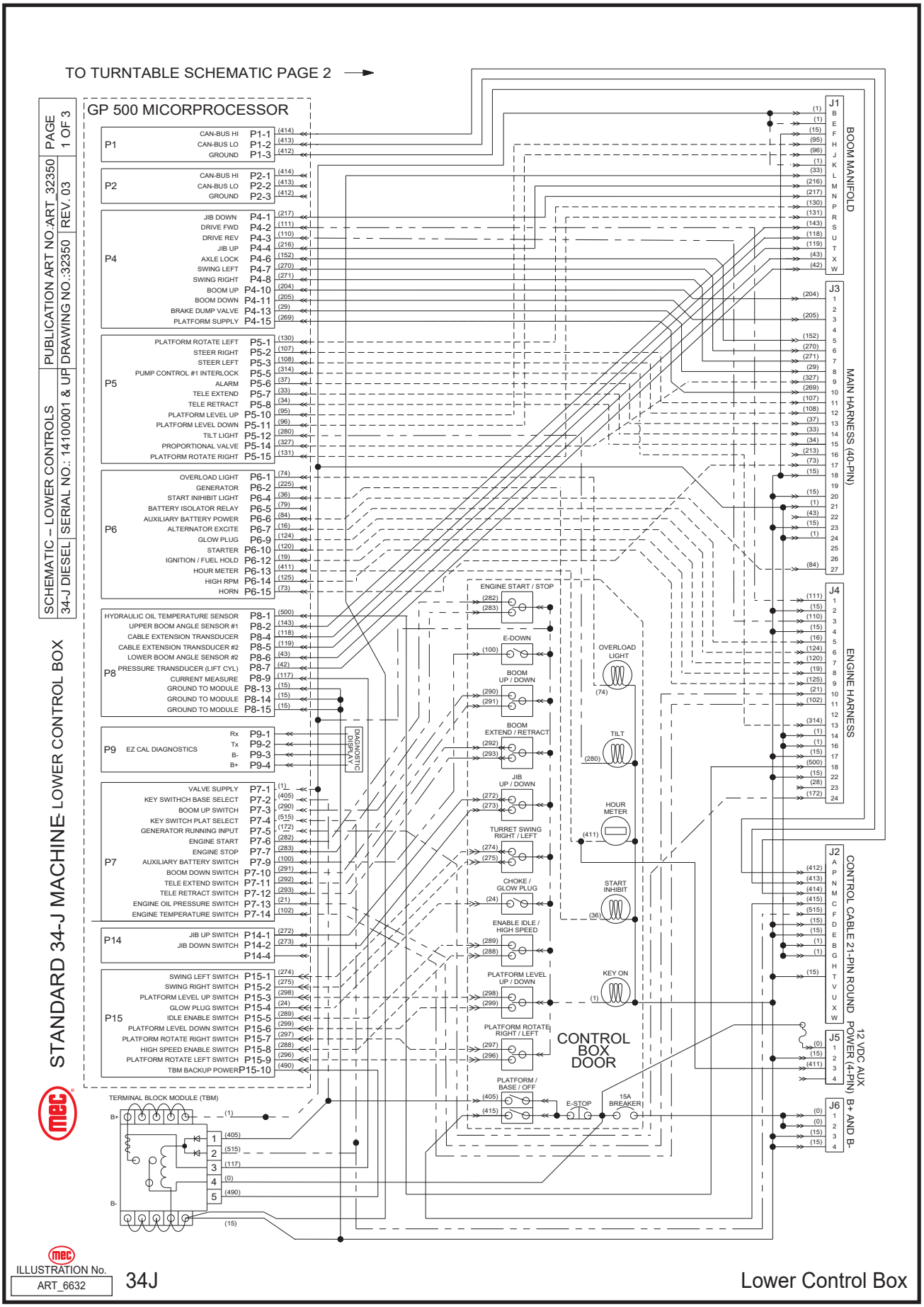

ILLUSTRATION No. ART_6632

34J

Lower Control Box

Electrical Schematic - Turntable

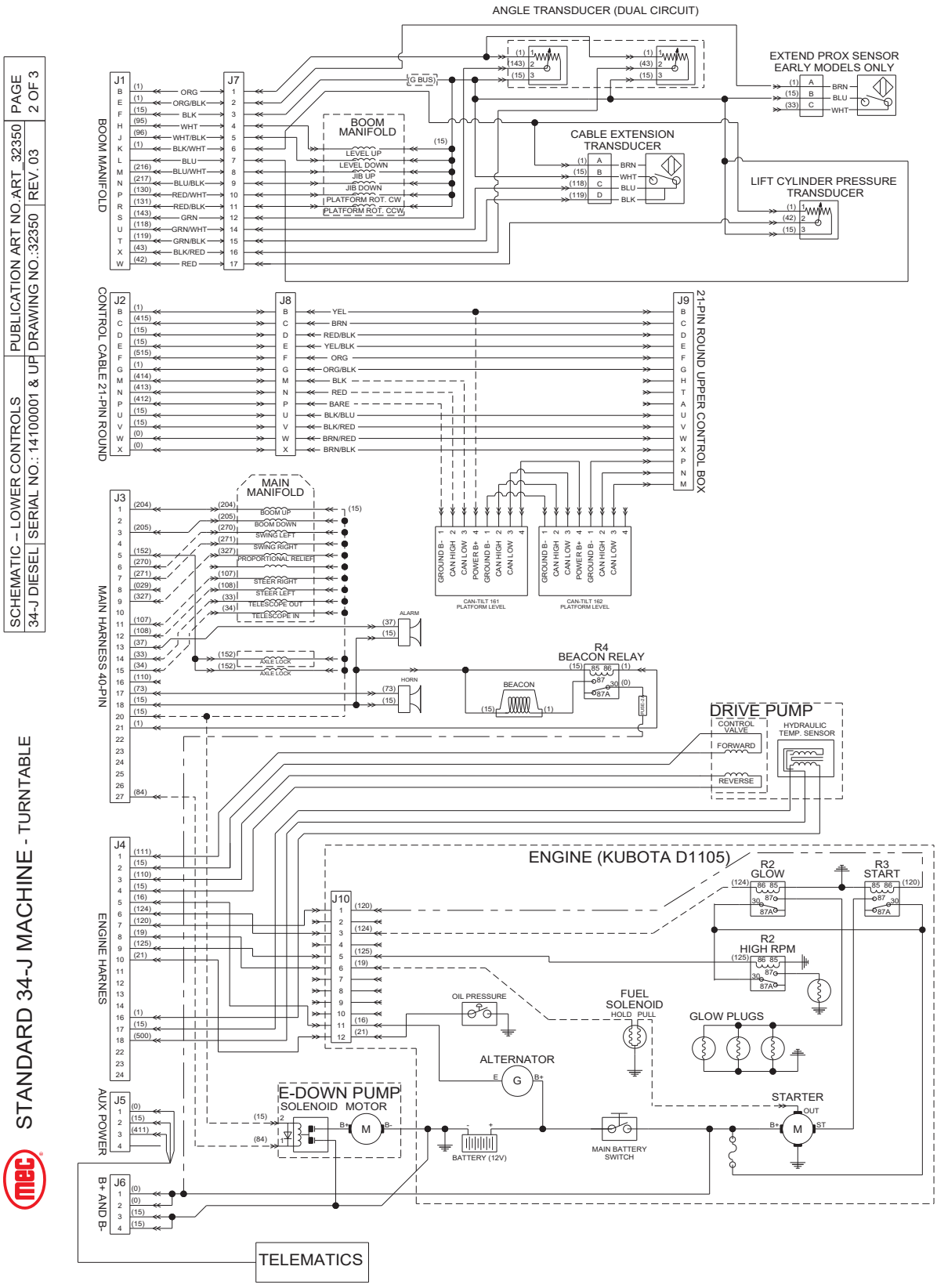

ILLUSTRATION No. ART_6632

34J

Turntable

Electrical Schematic - Upper Controls

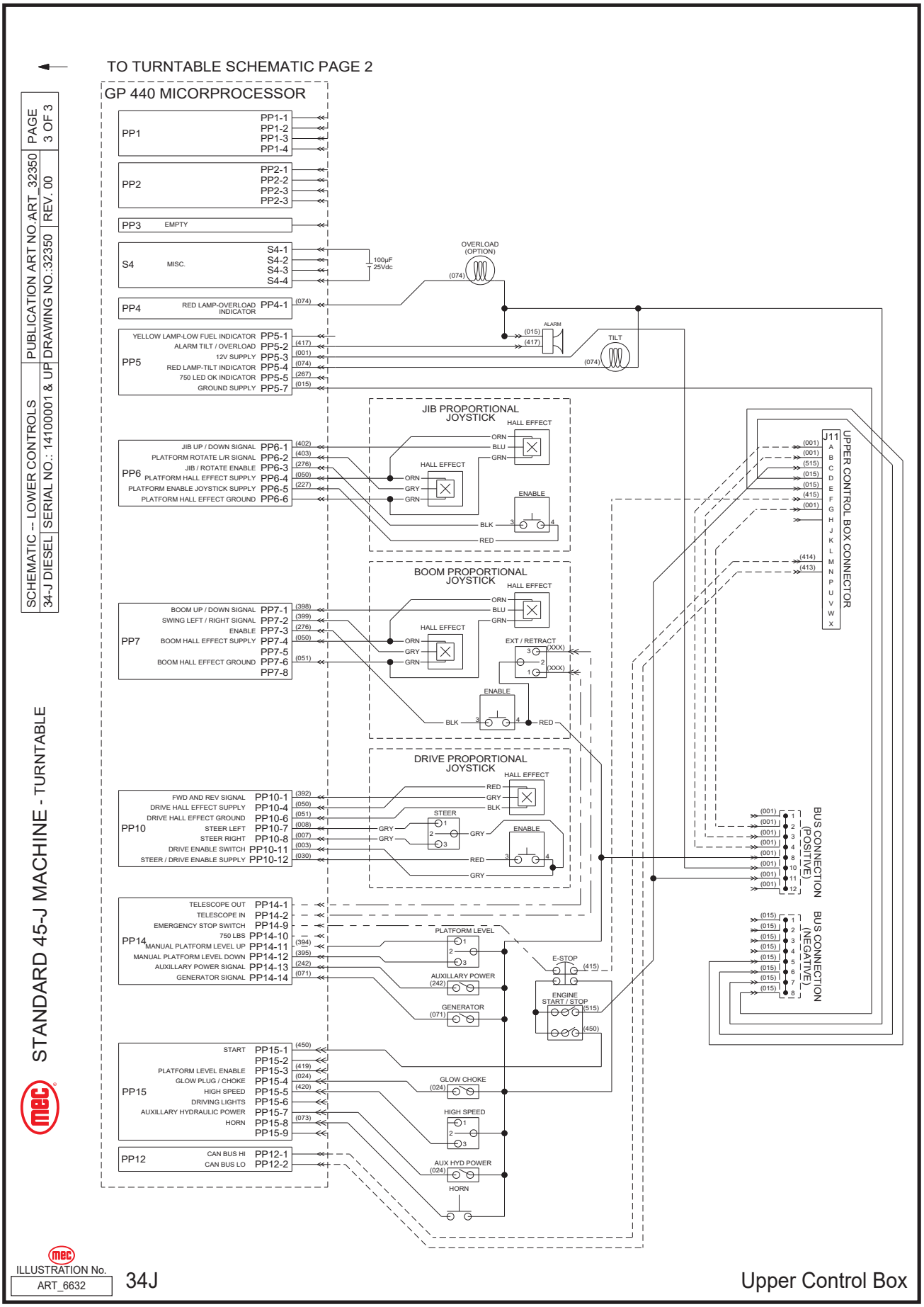

ILLUSTRATION No. ART_6632

34J

Upper Control Box

Hydraulic Schematic

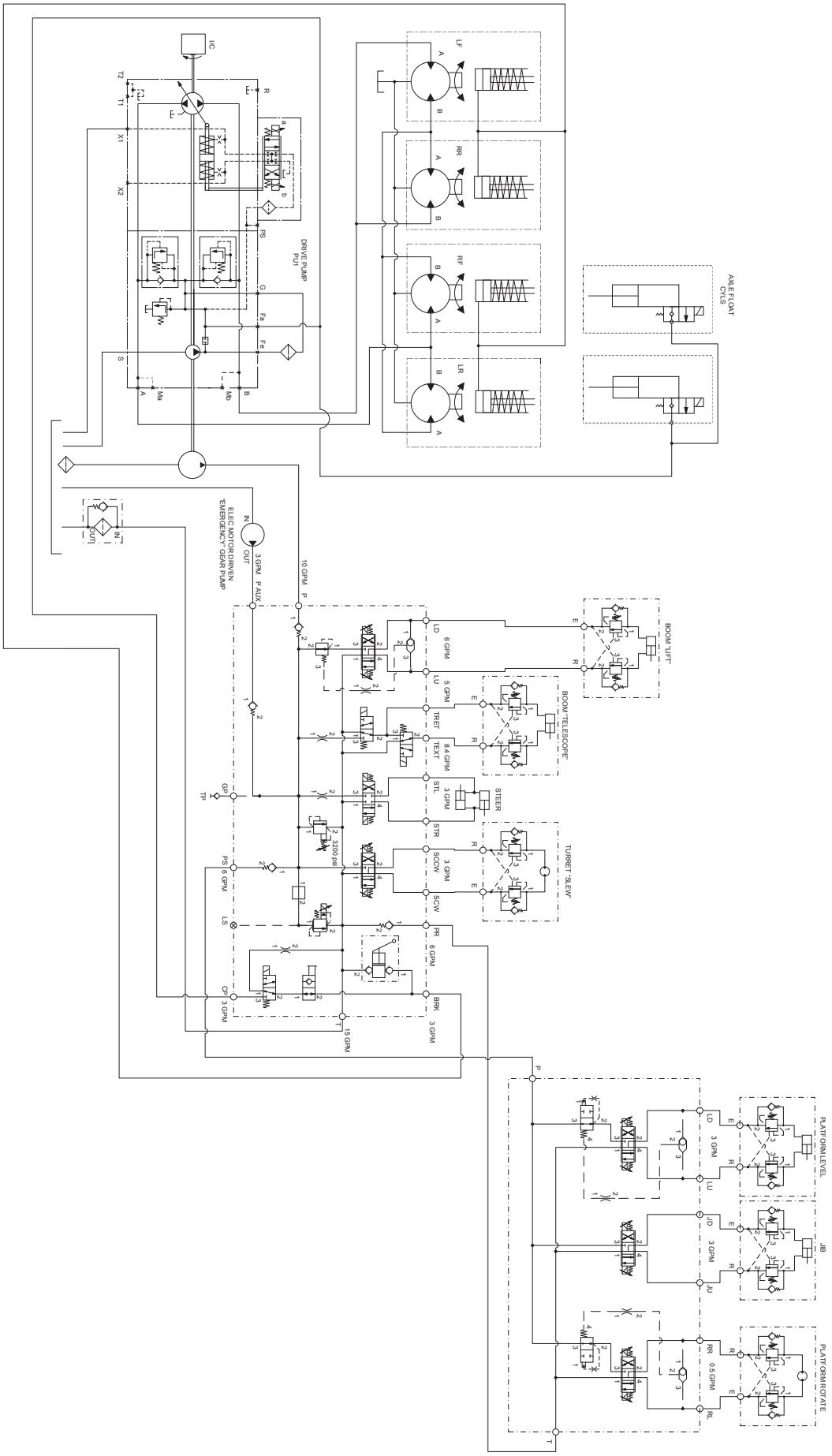

Main Manifold Valves

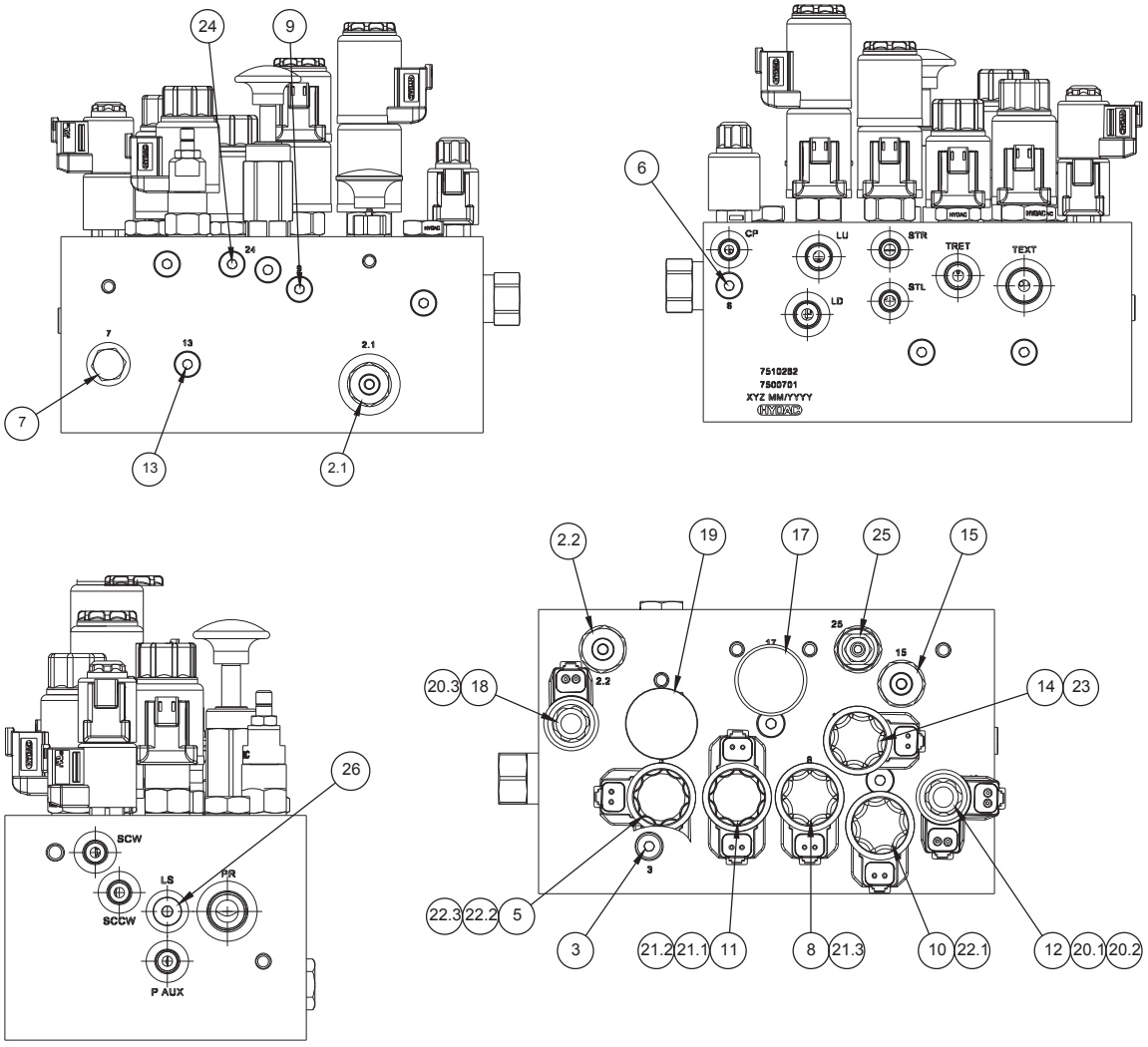

34JD MAIN MANIFOLD

ITEM NO.	DESCRIPTION	FUNCTION	QTY.
2.1, 2.2	CHECK VALVE	Prevents back flow: 2.1 for Emergency Pump efeciency. 2.2 for platform manifold.	2
3	SHUTTLE VALVE	Pilot control shuttle to route pilot hyd to Flow Regulator valve 4	1
4	FLOW REGULATOR VALVE	Regulates flow to Lift circuit for better lift speed control	1
5	PROPORTIONAL DIRECTIONAL VALVE	Directs pump flow to Boom Lift/lower in conjunction with operator input	1
6	ORIFICE 0.60MM	Limits flow to Flow Regulator Valve (4) for smoother operation	1
7	CHECK VALVE	Prevents back flow to emergency pump in normal operation	1
8	2 POSITION, 3-WAY VALVE	Telescope extend/retract function. Directional is dependent on valve 10 position.	1
9	ORIFICE 1.30MM	Reduces flow to steering for proper steering speed.	1
10	2 POSITION, 3-WAY VALVE	Directs oil to retract boom when shifted. Routs return flow from extend when idle	1
11	DIRECTIONAL VALVE	Directs oil to steer cylinders, direction depending on operator input	1
12	PROPORTIONAL DIRECTIONAL VALVE	Directs oil to Turret Rotate actuator, direction depending on operator input.	1
13	ORIFICE 1.0MM or PORT PLUG	Orifice reduces flow to pump Load Sense pilot circuit for smoother operation	1
14	PROPORTIONAL RELIEF VALVE	Limits system pressure proportionally depending on specific operation/s	1
15	CHECK VALVE	Increased return flow pressure from platform manifold to prevent drain off when idle	1
16	ORIFICE 0.75MM	Controls flow from brake circuit to allow slower brake application during deceleration	1
17	HAND PUMP, BRAKE RELEASE	Converts human energy to hydraulic flow for emergency brake release	1
18	2 POSITION, 3-WAY VALVE	Directs flow to release brakes when drive is operated	1
19	2 POSITION MANUAL VALVE	Prevents brakes from releasing when brakes are released with hand pump	1
20.1, 2, 3	COIL 12 VOLT 30 WATT	Converts 12 volts to electro-magnetism to shift Rotate and Brake valves	3
21.1, 2, 3	COIL 12 VOLT 40 WATT	Converts 12 volts to electro-magnetism to shift Steer and Boom Ext/Ret valves	3
22.1, 2, 3	COIL 12 VOLT 50 WATT	Converts 12 volts to electro-magnetism to shift Boom Up/Down and Boom Ret valves	3
23	COIL 12 VOLT 40 WATT	Converts 12 volts to electro-magnetism to control system Relief pressure	1
24	ORIFICE 1.60MM	Controls flow to limit Boom Extend/Retract speed	1
25	RELIEF VALVE 3200PSI	Limits system maximum pressure to 3200PSI	1
26	PLUG SAE 04 Hol. Hex NBR	Seals open ports with removable cap, sometimes concealing other components	1

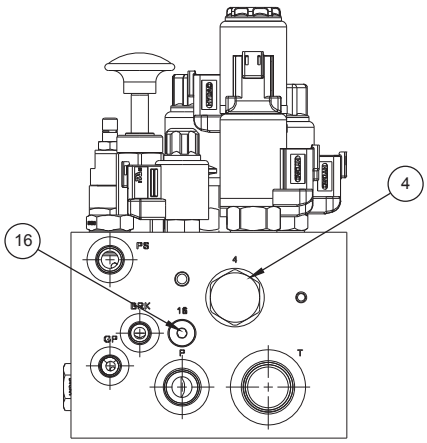

ILLUSTRATION No.
Art_5781

34-J

Main Manifold Valves

THIS PAGE HAS BEEN INTENTIONALLY LEFT BLANK

Parts Introduction

This Parts sections consists of illustrated parts sections and is designed to provide you, the customer, with illustrations and the list of associated parts needed to properly maintain the MEC self-propelled aerial work platform. When used in conjunction with the Service section in this manual and the Operator's Manual (provided separately), this manual will assist you in making necessary adjustments and repairs, and identifying and ordering the correct replacement parts.

All parts represented here are manufactured and supplied in accordance with MEC quality standards.

We recommend that you use genuine MEC parts to ensure proper operation and reliable performance.

To obtain maximum benefits from your MEC Aerial Work Platforms, always follow the proper operating and maintenance procedures. Only trained authorized personnel should be allowed to operate or service this machine. Service personnel should read and study the Operator's, and the Service and Parts Manuals in order to gain a thorough understanding of the unit prior to making any repairs.

Upper Controls Box Without PPSS, Part 1

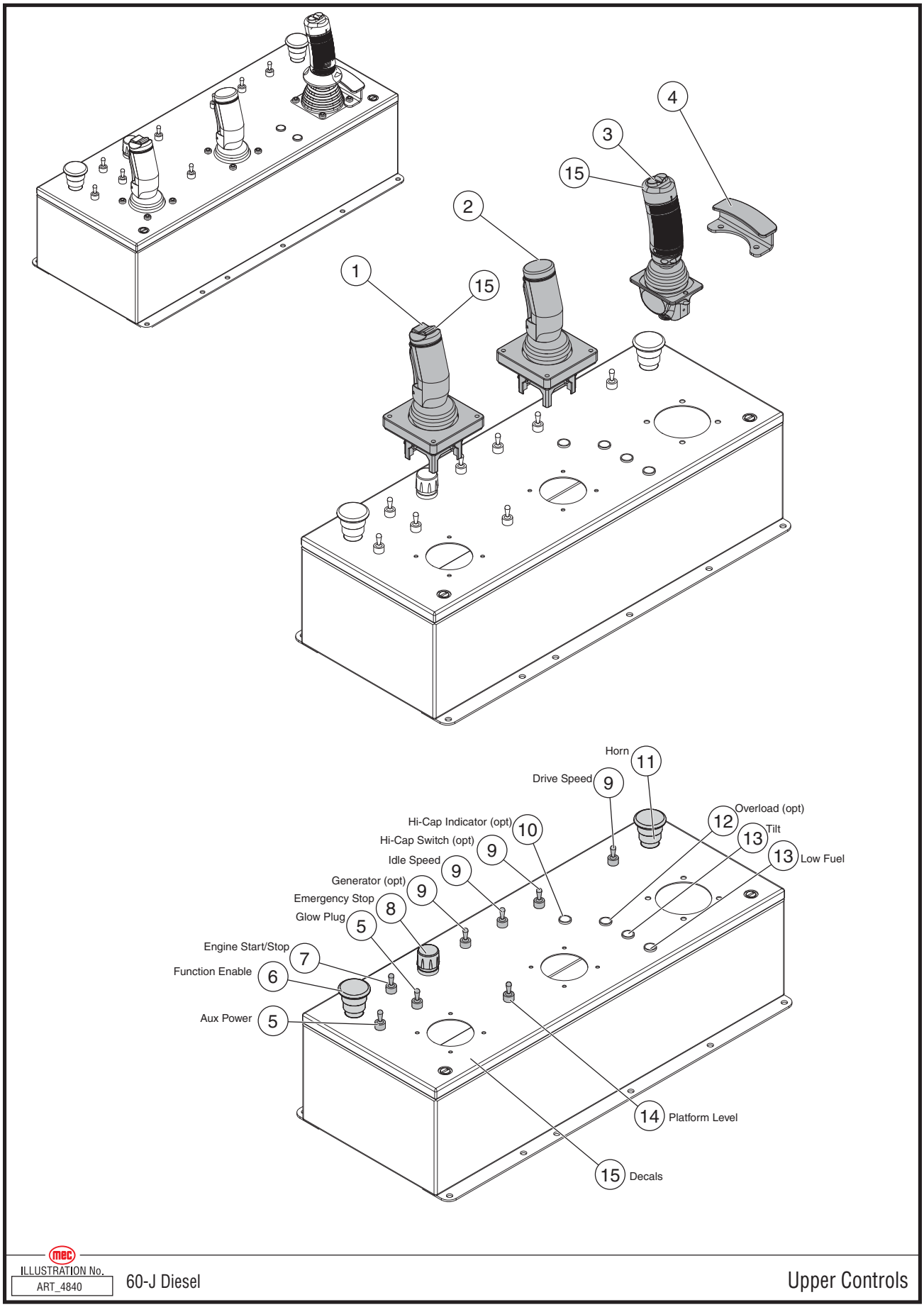

ILLUSTRATION No. ART_4840

60-J Diesel

Upper Controls

Item	Part Number	Description	Qty.
1	94685	Boom Control Handle	1
2	94686	Platform Control Handle	1
3	94687	Drive Control Handle	1
4	28581	Palm Rest	1
5	7423	Switch, 2 Position Momentary	2
6	92422	Enable Button	1
7	92427	Switch, 3 Position, Single Momentary	1
8	92408	Emergency Stop Button	1
9	6234	Switch, 2 Position	2
10	93926	Decal, Upper Controls	1
11	92421	Horn Button	1
12	--	--	--
13	92253	Light, Amber	2
14	91954	Switch, 3 Position Momentary	1
15	93926	Decal, Upper Controls, 60-J Diesel	1

Upper Controls Box Without PPSS, Part 2

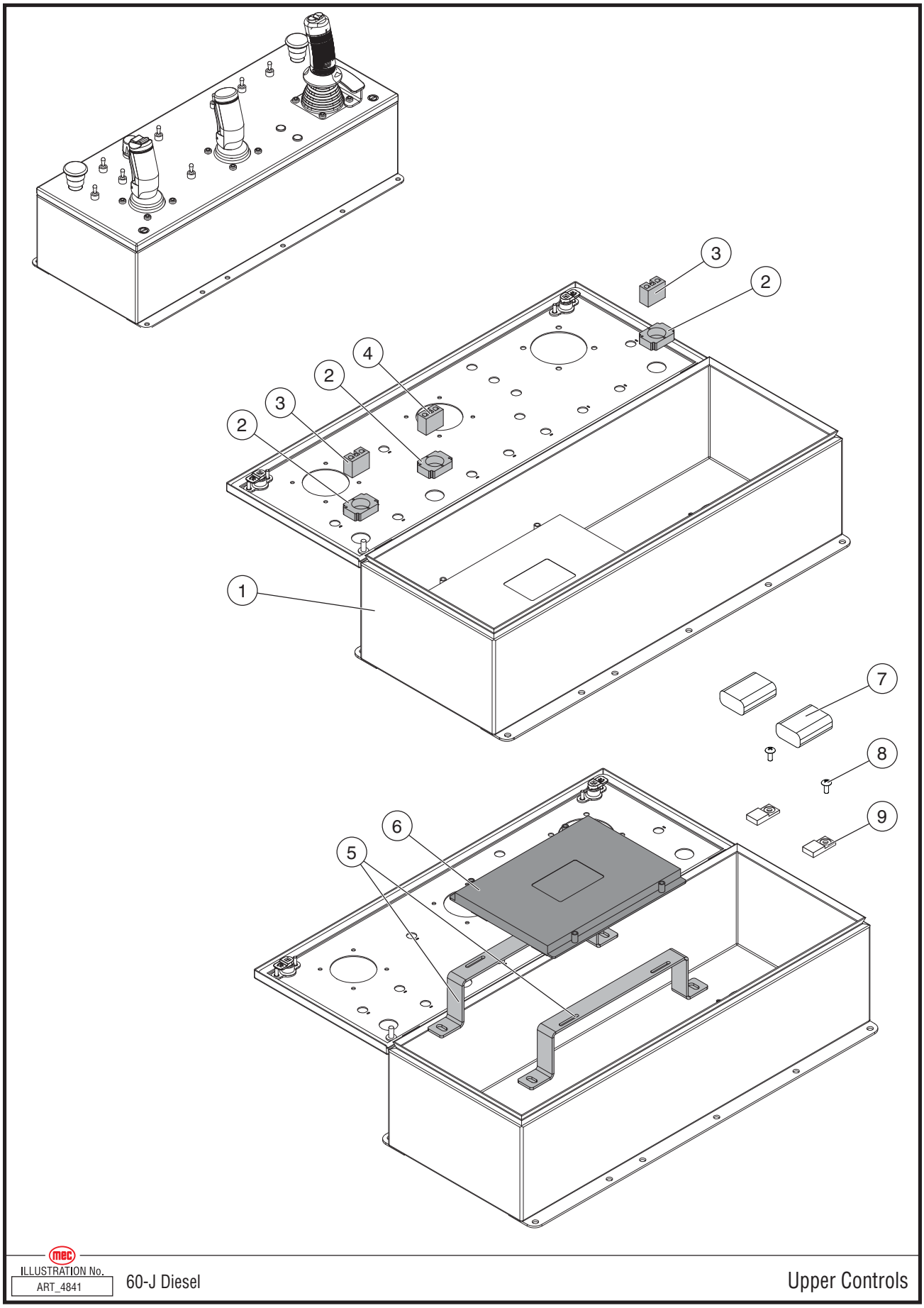

ILLUSTRATION No. ART_4841

60-J Diesel

Upper Controls

Item	Part Number	Description	Qty.
1	28781	Upper Controls Enclosure	1
2	90714	Switch Base	3
3	8082	Contact Block, Normally Open	2
4	8083	Contact Block, Normally Closed	1
5	28779	Bracket	1
--	50191	THMS #10-32X00.50 ZP	4
6	92027	GP440 Module	1
--	50330	THMS #10-32X01.00 ZN Phillips (Not Shown)	4
--	50238	NNYL #10-32 05 Z (Not Shown)	4
7	92033	Buss Module	2
8	50191	Screw, THMS #10-32 × 0.5	2
--	50238	NNYL #10-32 05 Z (Not Shown)	2
9	91881	Bus Mount	2
10	28785	Cable Assembly, Upper Control Box Lid Leash	1
11	92236	Decal, EZ-CAL Port	1

Upper Controls Box With PPSS, Part 1

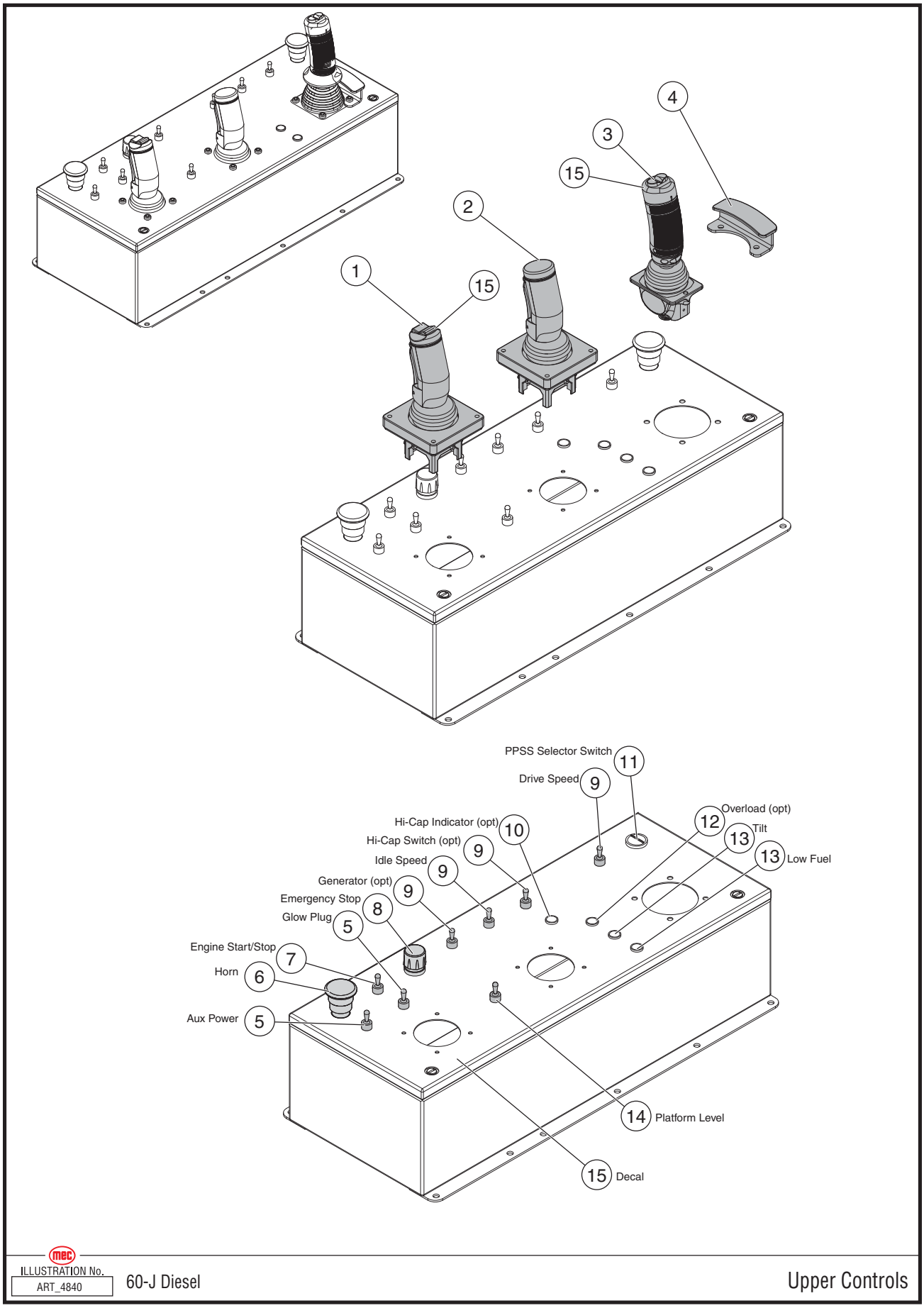

ILLUSTRATION No. ART_4840

60-J Diesel

Upper Controls

Item	Part Number	Description	Qty.
1	94685	Boom Control Handle	1
2	94686	Platform Control Handle	1
3	94687	Drive Control Handle	1
4	28581	Palm Rest	1
5	7423	Switch, 2 Position Momentary	2
6	92421	Black, Mushroom Push Button Switch	1
	8082	Contact Block N/O	1
	90714	Base, Switch	1
7	92427	Switch, 3 Position, Single Momentary	1
8	92408	Emergency Stop Button	1
9	6234	Switch, 2 Position	2
10	93926	Decal, Upper Controls	1
11	95279	Switch 2-POS Selector	1
--	94339	Liquid Tight Plug	1
12	--	--	--
13	92253	Light, Amber	2
14	91954	Switch, 3 Position Momentary	1
15	95283	Decal, 2020 ANSI 34-J/45-J Upper Controls	1

Upper Controls Box With PPSS, Part 2

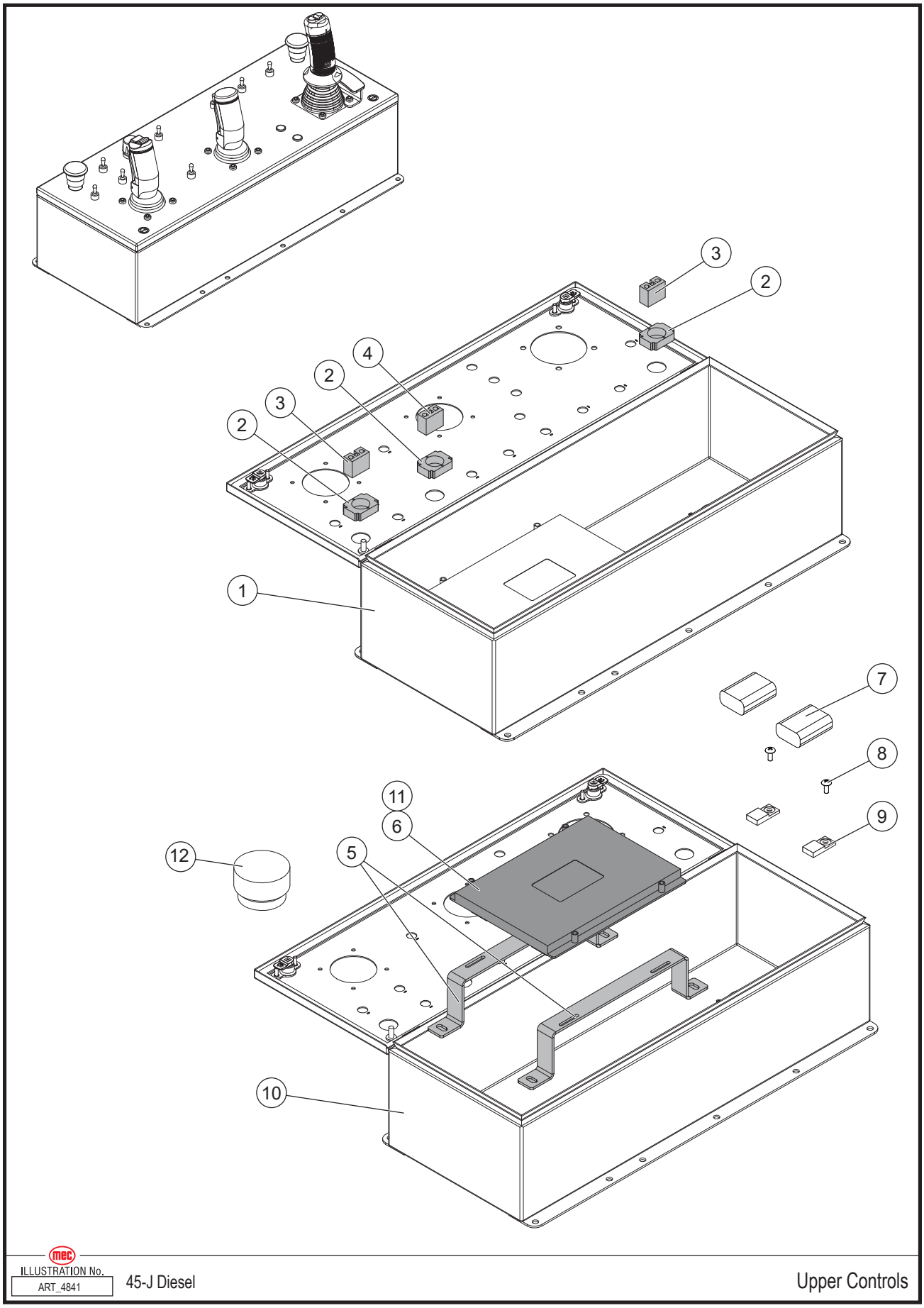

ILLUSTRATION No. ART_4841 45-J Diesel Upper Controls

Item	Part Number	Description	Qty.
1	28781	Upper Controls Enclosure	1
2	90714	Switch Base	3
3	8082	Contact Block, Normally Open	2
4	8083	Contact Block, Normally Closed	1
5	28779	Bracket	1
--	50191	THMS #10-32X00.50 ZP	4
6	92027	GP440 Module	1
--	50330	THMS #10-32X01.00 ZN Phillips (Not Shown)	4
--	50238	NNYL #10-32 05 Z (Not Shown)	4
7	92033	Buss Module	2
8	50191	Screw, THMS #10-32 × 0.5	2
--	50238	NNYL #10-32 05 Z (Not Shown)	2
9	91881	Bus Mount	2
10	28785	Cable Assembly, Upper Control Box Lid Leash	1
11	92236	Decal, EZ-CAL Port	1
12	7553	Alarm, Tip Over	1

Lower Controls

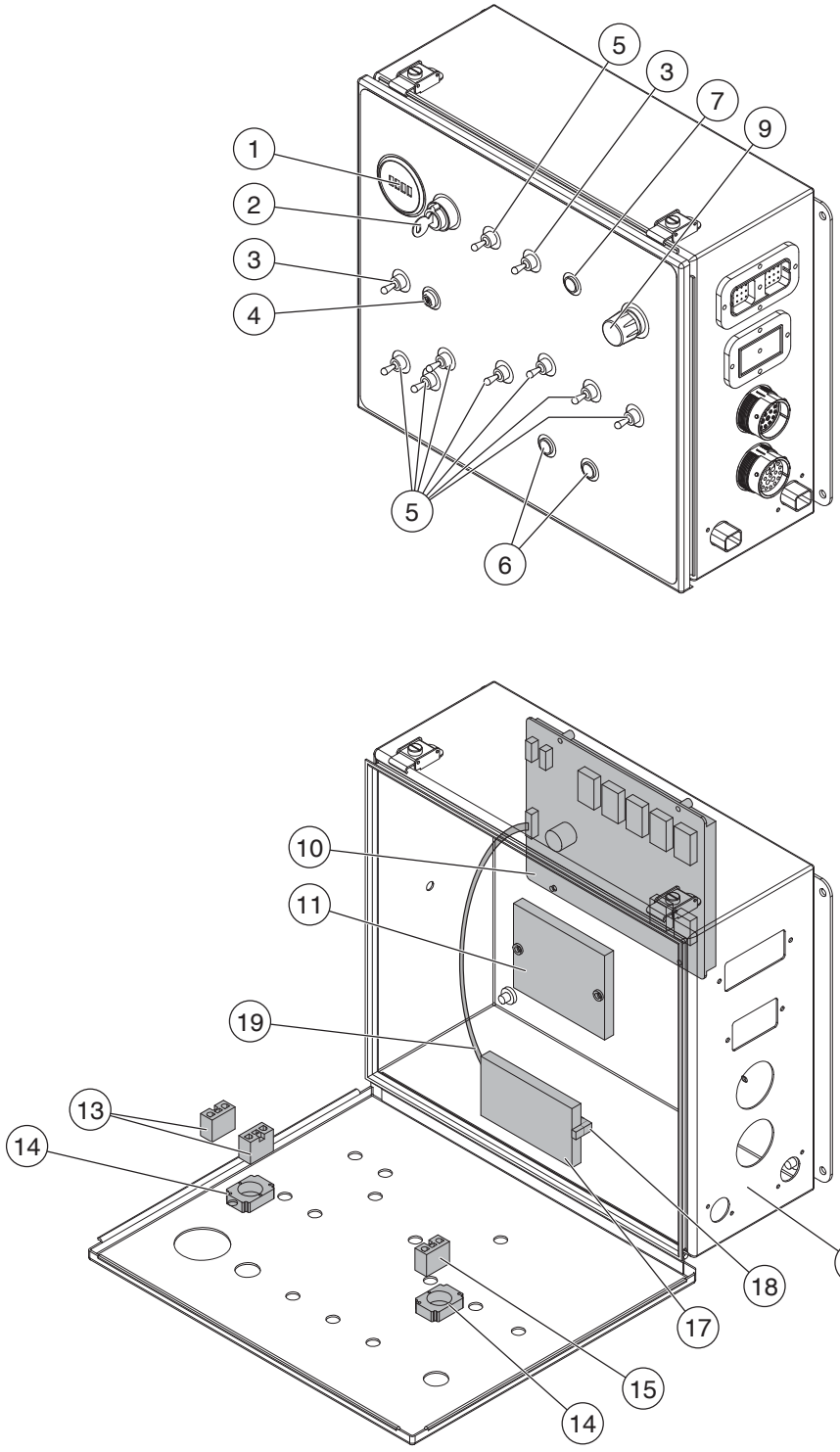

ILLUSTRATION No. ART_4842 34-J Diesel Lower Controls

Item	Part Number	Description	Qty.
1	91704	Hour Meter	1
2	9549	Key Switch	1
3	7423	Switch, 2 Position Momentary	2
4	7235	Circuit Breaker	1
5	91954	Switch, 3 Position Momentary	8
6	92253	Light, Amber	1
7	92254	Light, Red	2
8	--	--	--
9	7800	Emergency Stop Button	1
10	95222	GP500 Module	1
11	91838	Terminal Block Module	1
12	--	--	--
13	8082	Contact Block, Normally Open	2
14	90714	Switch Base	2
15	8083	Contact Block, Normally Closed	1
16	32306	Lower Controls Enclosure	1
17	92003	Diagnostic Display	1
18	26571	Bracket	1
19	22626	Cable	1

Platform Assembly, 6 Foot

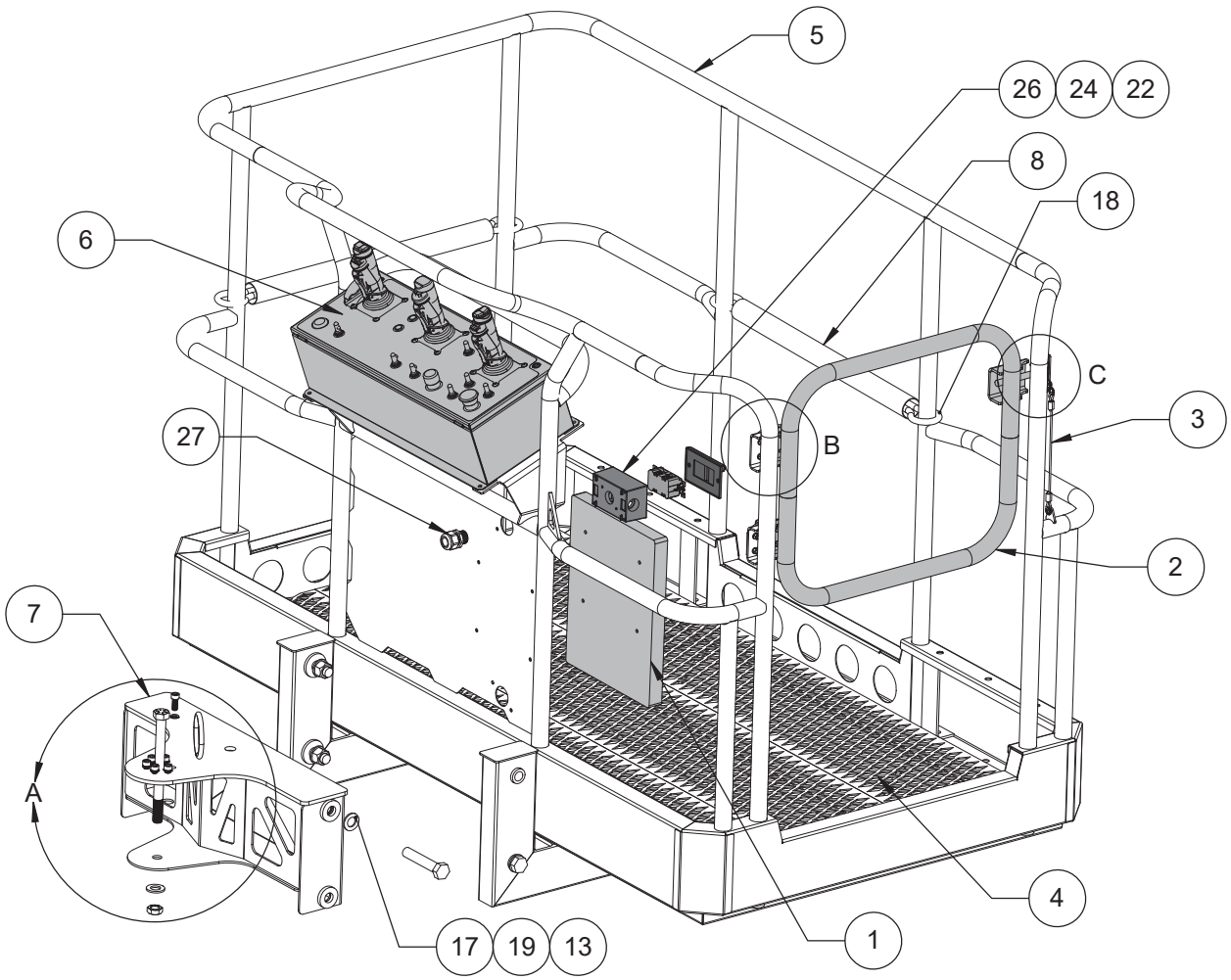

SEE NEXT PAGE FOR DETAILED VIEWS OF A, B & C

ILLUSTRATION No. Art_5704 34-J Platform Assembly

Item	Part Number	Description	Qty.
--	32890	Platform Assembly (Serial 141XXXXX)	--
	32891	Platform Assembly (Serial 154XXXXX)	--
1	8909	Enclosure Service Manual	1
2	28520	Platform, Swing Gate Weldment	1
3	28528	Platform, Swing Gate Latch Cable Assembly	1
4	28548	Decking Material, RY-Diamond, Aluminum, 6 Foot	3
5	28550	Platform, Weldment, 6 Foot	1
6	28916	Subassembly, Upper Control Box, Diesel (For Control Box Without PPSS - Refer to page 122 and page 124) (For Control Box With PPSS - Refer to page 126 and page 128)	1
7	32227	Platform-To-Jib Mount (To Serial #14100292)	1
	32404	Platform-To-Jib Mount (From Serial #14100293) (From Serial #15400025)	1
8	32317	Platform, Entry Slide Tube	2
13	50052	NNYL M20X2.50 10 ZP Nylon Inse	4
17	50489	WSHR M20 ZP Thru-Hardened DIN 125A	8
18	52674	Slide Tube Hose	2
19	53002	HHCS M20-2.50 X 110, 10.9, ZP	4
22	91598	Cover, (Outlet Box) Weatherproof	1
24	92271	Outlet, 120V 20A GFCI	1
26	93871	Electrical Box, 1-GANG, Weatherproof, Alum.	1
27	93872	Strain Relief, Cord Grip, 3/4 NPT, Straight, Black, Water Tight	1

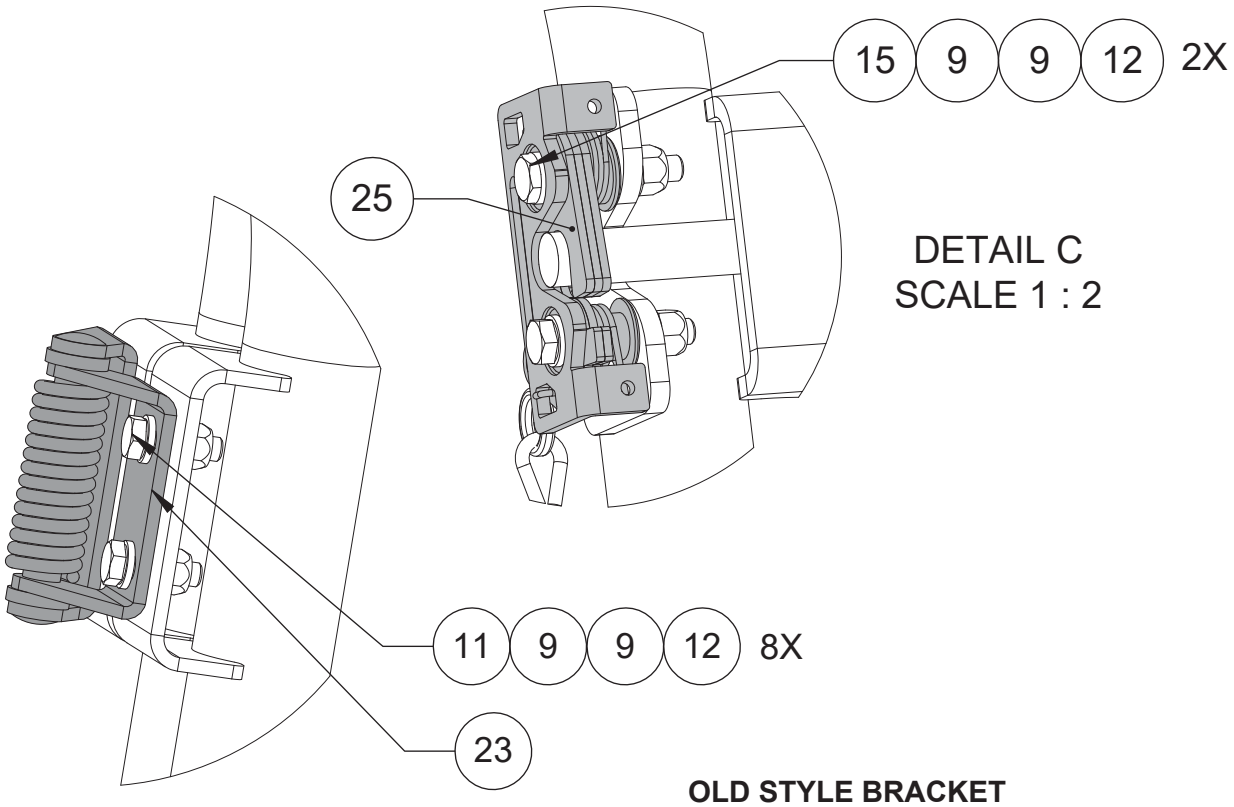

DETAIL C
SCALE 1 : 2

DETAIL B
SCALE 1 : 2

OLD STYLE BRACKET
Serial #14100025 - 14100292

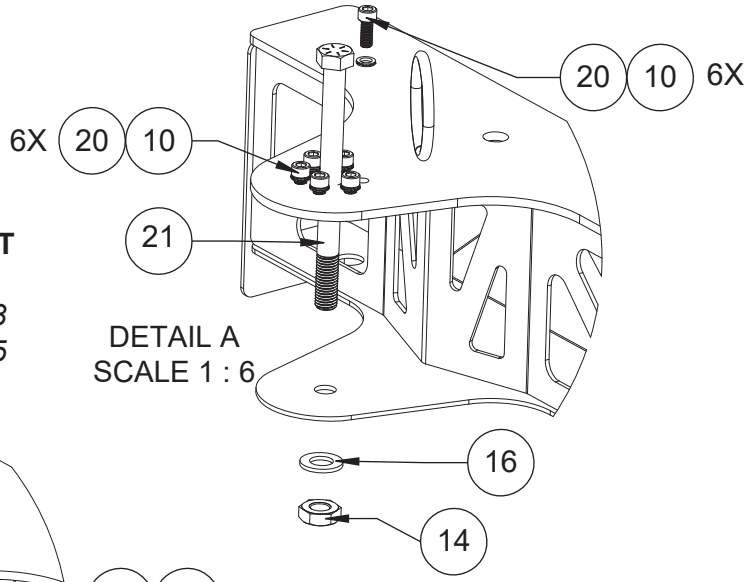

DETAIL A
SCALE 1 : 6

NEW STYLE BRACKET
(WITH LOAD CELL)
From Serial #14100293
From Serial #15400025

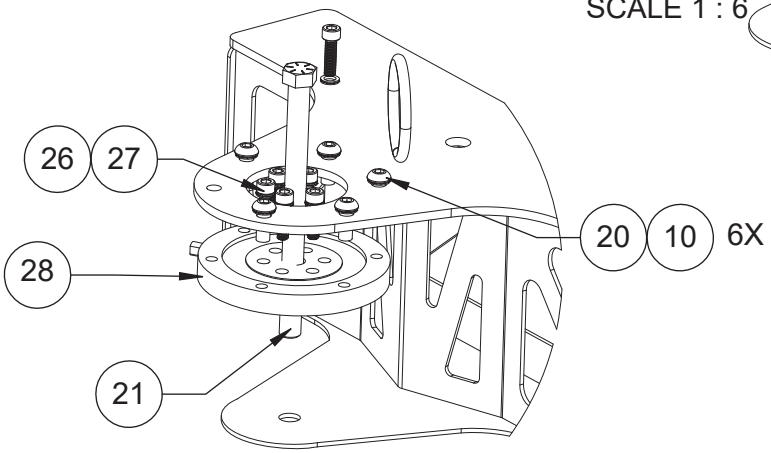

DETAIL A
SCALE 1 : 6

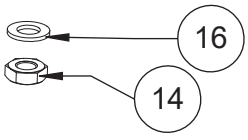

ILLUSTRATION No.
Art_5704

34-J

Platform Assembly

Item	Part Number	Description	Qty.
--	32890	Platform Assembly	--
9	50000	WSHR M06 ZP Standard Flat	23
10	50006	WSHR M10 ZP Nordlock	6
11	50028	HHCS M06-1.00X020 08 ZP F	8
12	50047	NNYL M06X1.00 08 ZP Nylock	10
14	50118	NNYL 03/04-10 08 ZP Short	1
15	50327	HHCS M06-1.00X035 08 ZP P	2
16	50384	WSHR 3/4 ZP SAE Flat	1
20	53323	SJCS M10 - 1.5 x 25mm Long	6
21	53324	HHCS 3/4"-10 Thread 9" LG	1
23	91888	Gate Hinge	2
25	92302	Sliding Gate Latch	1
26	53013	SHCS M12-1.75 X 35, 12.9, ZP, P	6
27	50007	WSHR M12 ZP NORDLOCK	6
28	95797	Sensor, Platform Overload, Load Cell (After serial #14100293 and from serial #15400000)	1

Optional Secondary Guarding

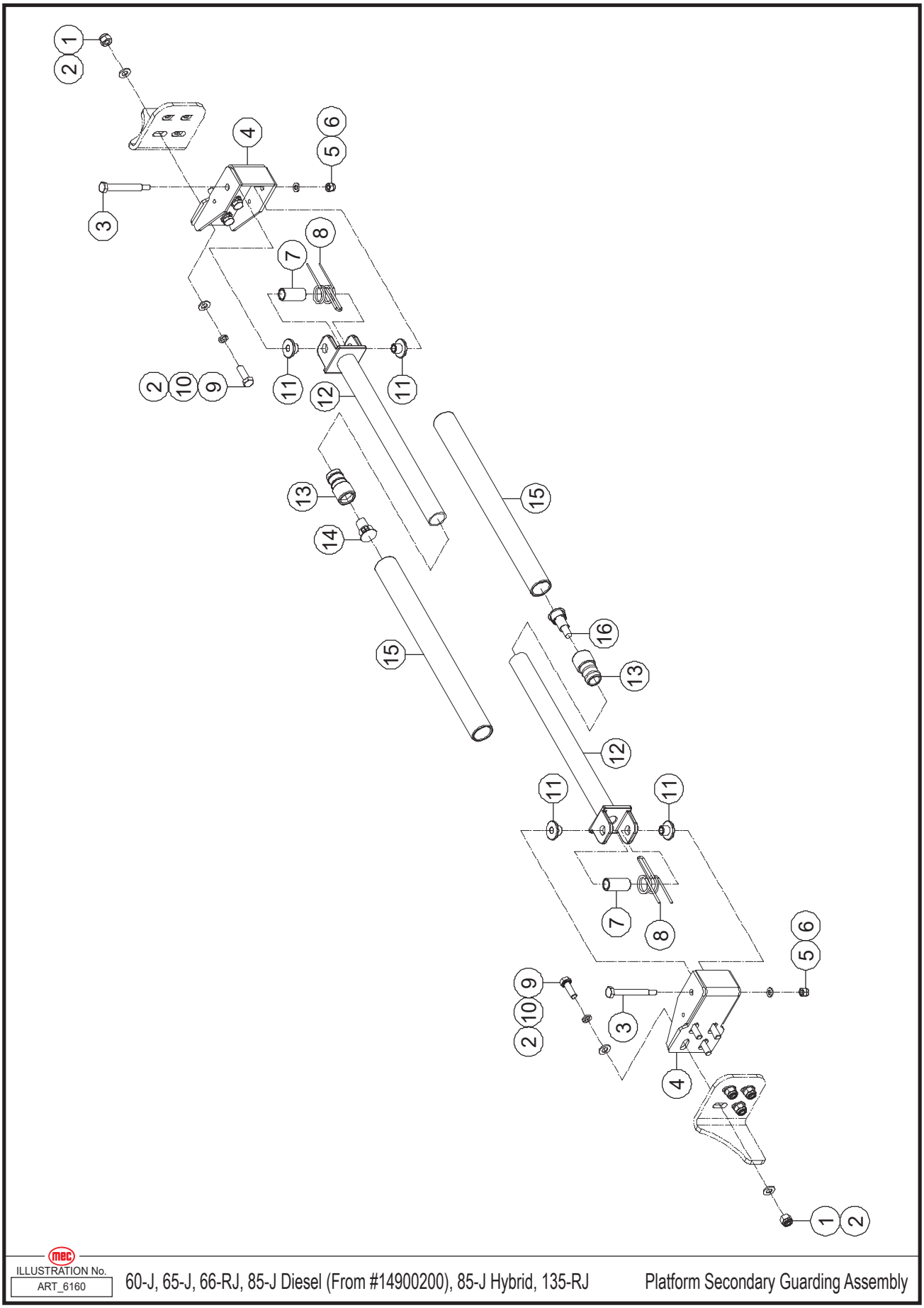

Item	Part Number	Description	Qty.
--	47552	Secondary Guarding Bars Assembly	1
1	50048	Nut NNYL M08-1.25 ZP	8
2	50001	WSHR M08 Standard Flat Washer ZP	16
3	45480	Pin	2
4	45490	Bracket, Contact Alarm	2
5	50047	Nut NNYL M06-1.00 ZP	2
6	50000	WSHR M06 Standard Flat Washer ZP	2
7	45482	Tube	2
8	45483	Spring	2
9	50031	Screw HHCS M08-1.25 × 25 ZP	8
10	53055	WSHR M08 Spring Washer ZP	8
11	45484	Bearing	4
12	45485	Tube, Contact Alarm	2
13	45486	Plug, Nylon	2
14	45487	Magnet	1
15	45488	Jacket, Foam	2
16	45489	Door Magnetic Switch	1

Jib Assembly, Part 1

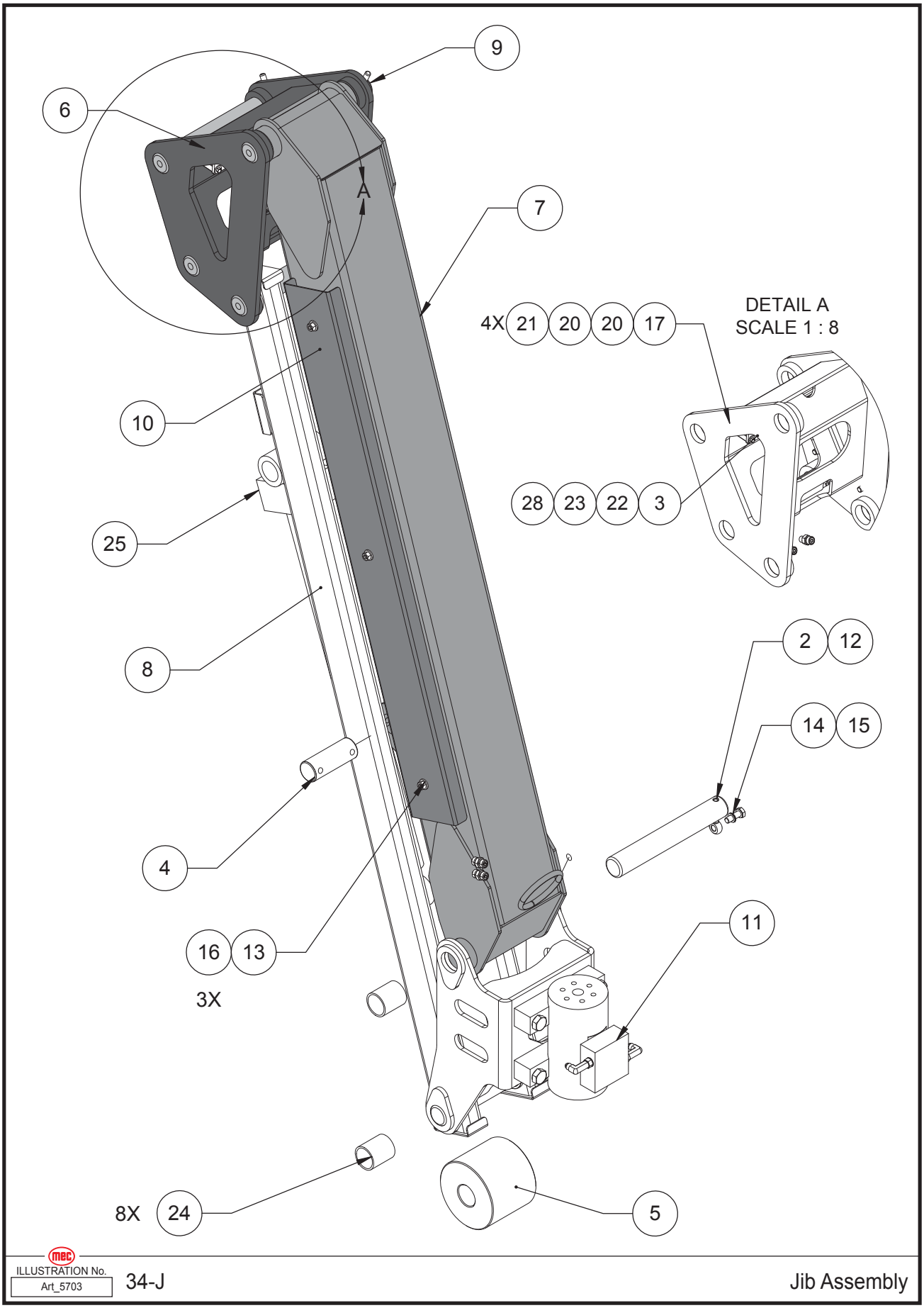

Item	Part Number	Description	Qty.
--	32880	Jib Assembly, 5ft	--
2	18165	Keeper Pin .375 x 2.20	2
3	28575	CAN Tilt Spreader Plate	2
4	28608	Pin - Jib Cyl., Jib Boom	1
5	28716	Jib, C-Link Roller Spacer	1
6	32190	Weldment, Bellcrank	1
7	32201	Upper Jib Tube Weldment	1
8	32209	Lower Jib Tube Weldment	2
9	32216	Pin - Jib Bell Crank & Platform Rotator	4
10	32217	Cover, Jib Boom	1
11	32218	Assembly, Platform Rotator (Refer to page 142)	1
12	32244	Pin - Platform Rotator	2
13	50001	WSHR M08 ZP Standard Flat	3
14	50006	WSHR M10 ZP Nordlock	6
15	50034	HHCS M10-1.50X030 08 ZP F	6
16	50048	NNYL M08X1.25 08 ZP Nylon	3
17	50524	NNYL M05-0.80 Nylon Lock Nut	4
20	53038	WSHR M05 Standard Flat ZP	8
21	53189	M5 x 0.8 X 60mm Thread	4
22	92201	CAN Tilt 161	1
23	92203	CAN Tilt 163	1
24	92214	1.50 X 1.75 X 2.00 Polygon Bearing	8
25	95095	Jib Cylinder	1
28	28869	Harness, CAN-Tilt Jumper	1

Jib Assembly, Part 2

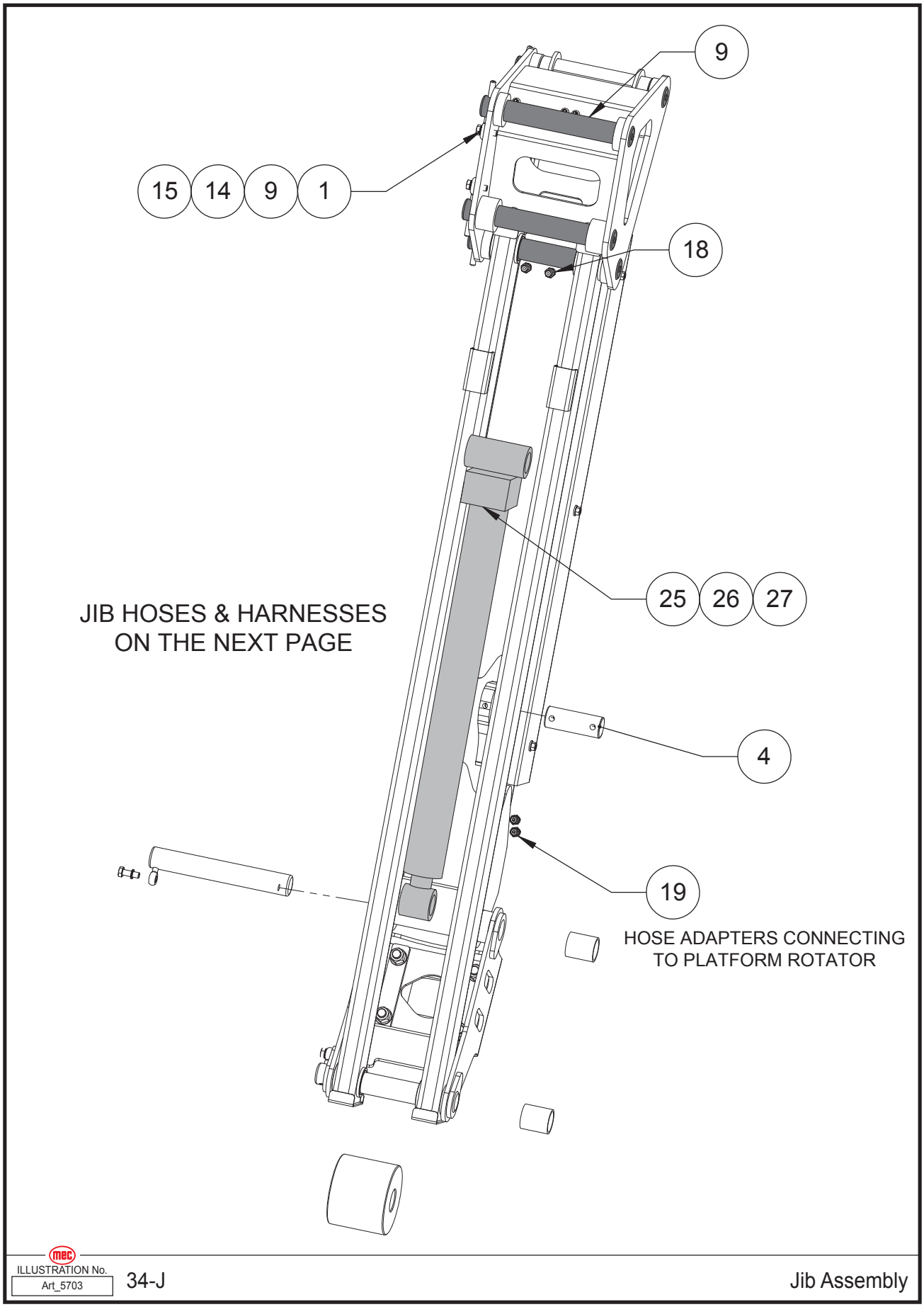

ILLUSTRATION No. Art_5703 34-J Jib Assembly

Item	Part Number	Description	Qty.
--	32880	Jib Assembly, 5ft	--
1	18151	Keeper Pin	4
4	28608	Pin - Jib Cyl., Jib Boom	1
9	32216	Pin - Jib Bell Crank & Platform Rotator	4
14	50006	WSHR M10 ZP Nordlock	6
15	50034	HHCS M10-1.50X030 08 ZP F	6
18	50831	HYFT MFFOR-MB-4-4	2
19	50862	HYFT MFFOR-MFFOR-4-4; FS2403-04-04	2
25	95095	Jib Cylinder	1
26	95228	3000PSI, CB Valve	1
27	95229	1000PSI, CB Valve	1

Jib Hoses

Part #	Description	Hose Name	Qty.
56158	RLBH-HP1	Rotate Left Bulk Head To Helac Port 1	1
56158	RRBH-HP2	Rotate Right Bulk Head Helac Port 2	1

Jib Electrical Harness

Qty	Part #	Description
1	28869	Harness, CAN-Tilt Jumper
1	32264	Harness, 24 Pin To Upper Control Box
1	32272	Harness, CAN Tilt To Platform
1	32274	Harness, CAN Tilt Extension

Platform Rotator Assembly

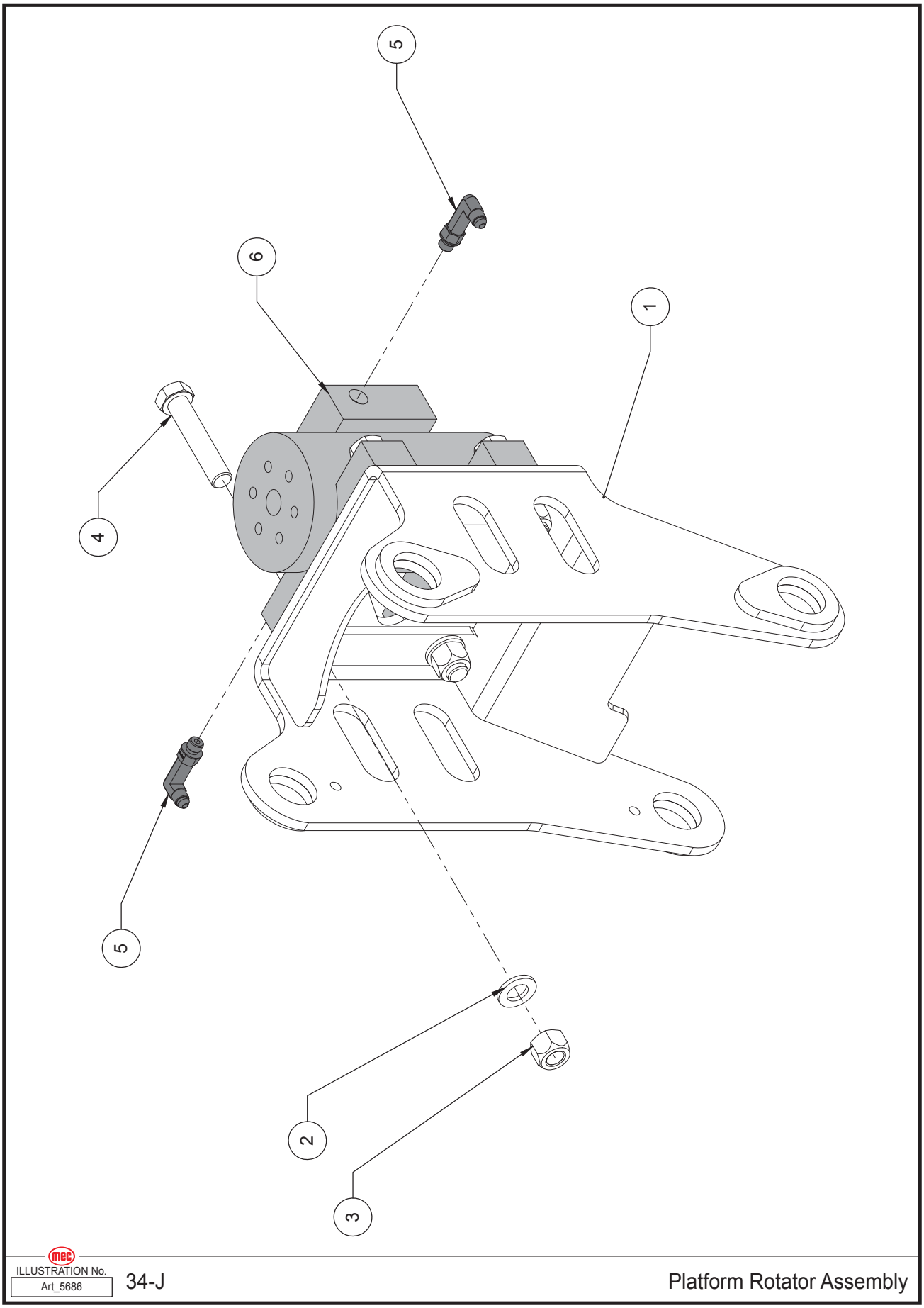

ILLUSTRATION No.
Art_5686

34-J

Platform Rotator Assembly

Item	Part Number	Description	Qty.
--	32218	Platform Rotator Assembly	--
1	32224	Bracket Weldment, Rotator	1
2	50004	WSHR M16 ZP Standard Flat	4
3	50051	NNYL M16X2.00 10 ZP Nylon Insert	4
4	50377	HHCS M16-2.00X080 10 ZP P	4
5	50647	HYFT MB-MJ90L-04-04	2
6	95119	Jib Rotator	1

Boom Assembly

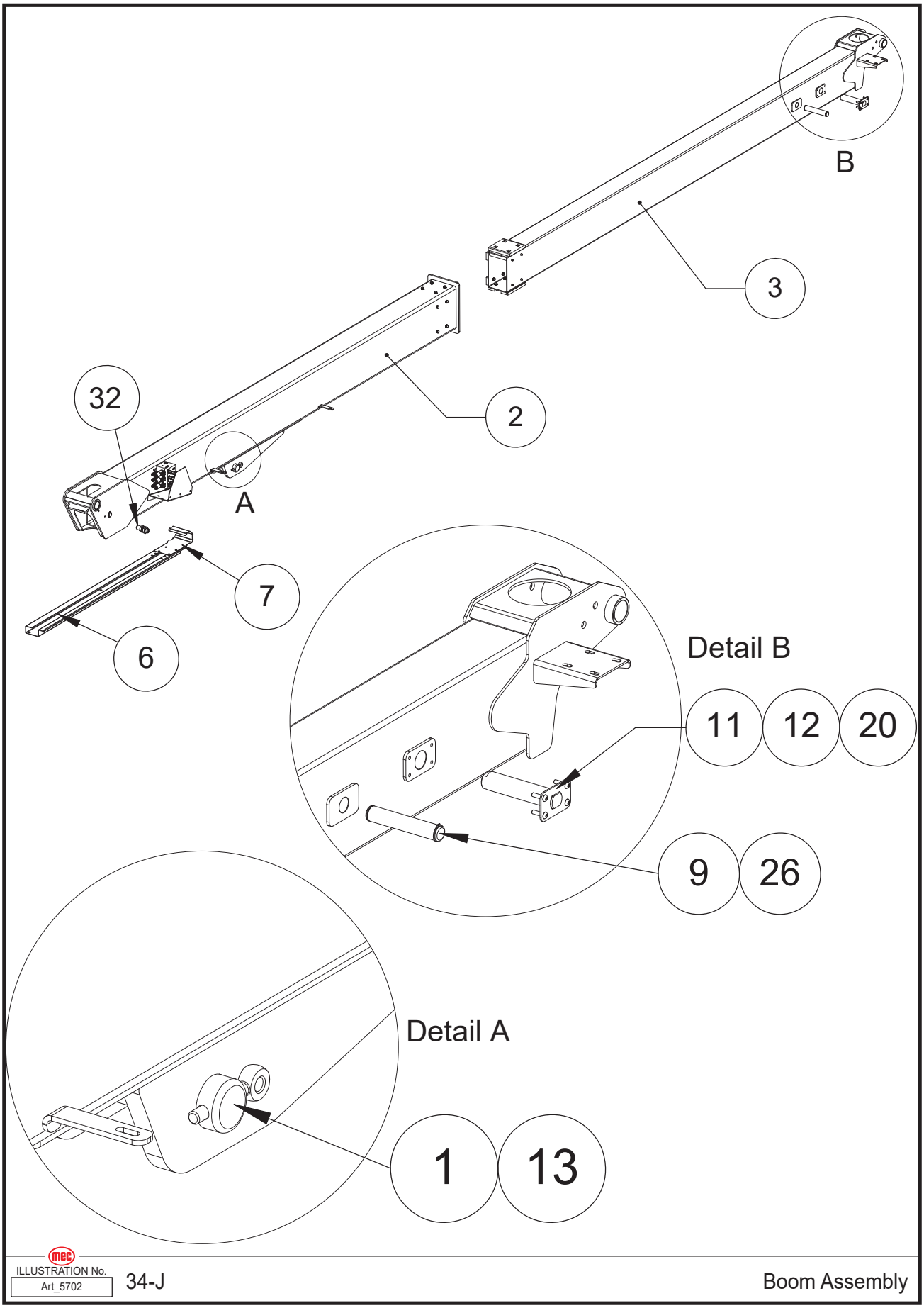

ILLUSTRATION No. Art_5702 34-J Boom Assembly

Item	Part Number	Description	Qty.
--	32870	Boom Assembly	--
1	18152	1/2" Pin Retainer	1
2	32120	Subassembly, Base Boom (Refer to page 152)	1
3	32121	Subassembly Tip Boom (Refer to page 154)	1
6	32158	Forming, Cable Track	1
7	32166	Forming, Hose Wrap	1
9	32169	Pin, Extend Cylinder, Tip Boom	1
11	32171	Pin, Platform Level, Tip Boom	1
12	32173	Retainer, Tip Boom	2
13	32174	Pin, Lift Cylinder	1
20	50414	BHCS M08-1.25X030 10.9 ZP P	8
26	93695	Retaining Ring, External Ø1.25 (1-1/4) Shaft	4
32	51073	HYFT MFFOR-MFFOR BH -4-4	2

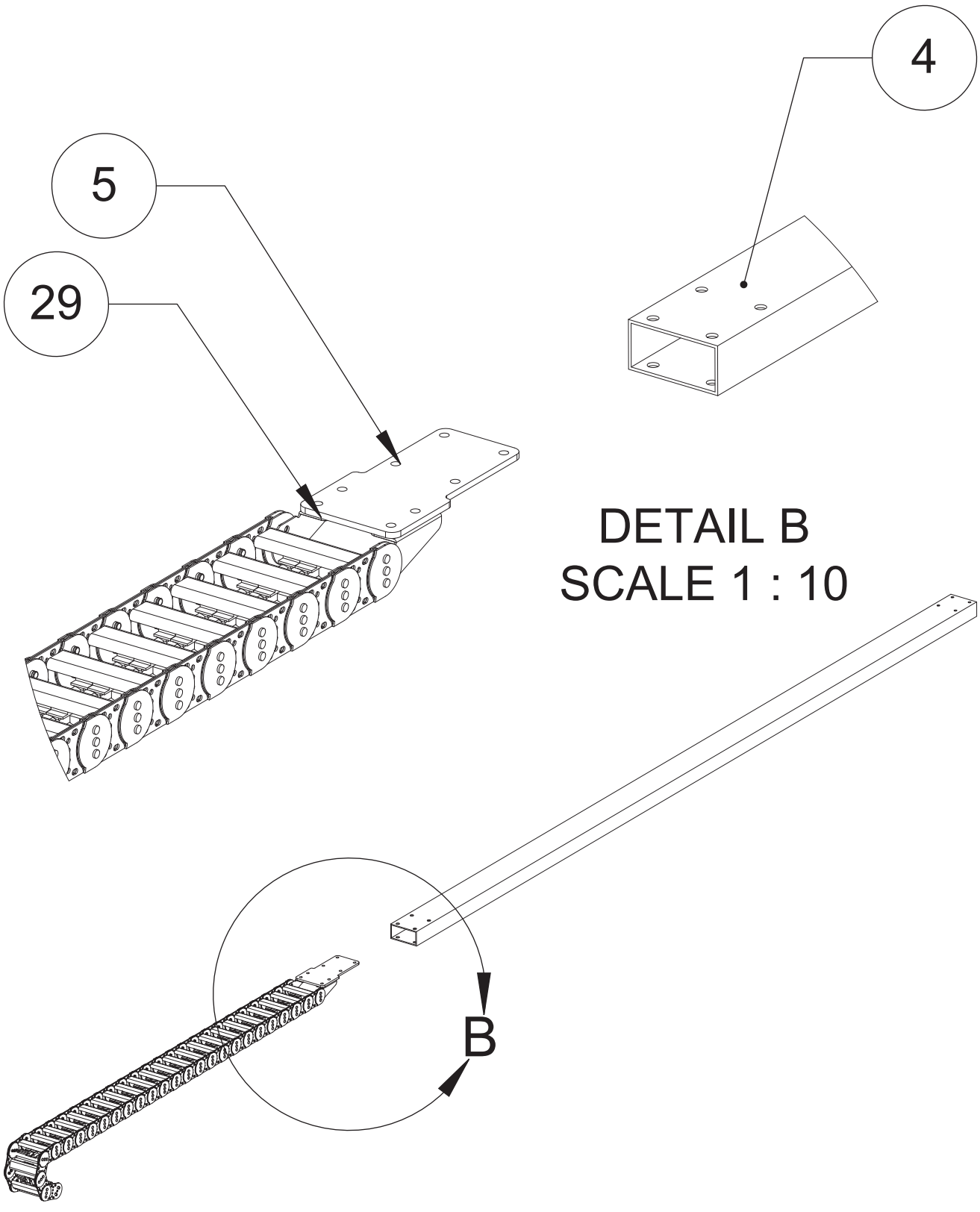

ILLUSTRATION No. Art_5702

34-J

Boom Assembly

Item	Part Number	Description	Qty.
--	32870	Boom Assembly	--
4	32156	Tube, Cable Track	1
5	32157	Bracket, Cable Tube	1
29	95115	Cable Track, 26 Link	1

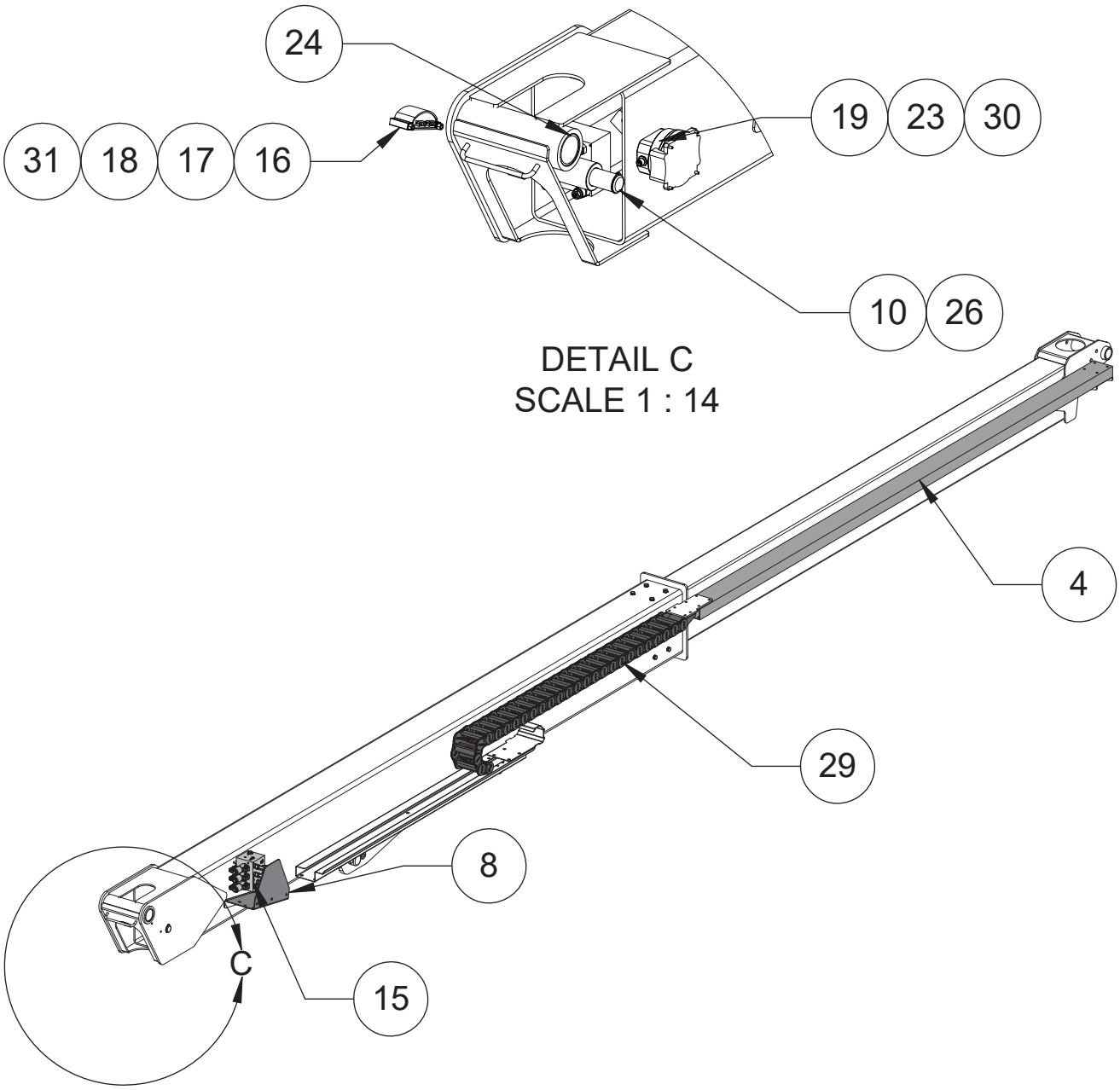

ILLUSTRATION No. Art_5702 34-J Boom Assembly

Item	Part Number	Description	Qty.
--	32870	Boom Assembly	--
4	32156	Tube, Cable Track	1
8	32167	Shield, Platform Manifold	1
10	32170	Pin, Extend Cylinder, Base Boom	1
15	32256	Assembly, Auxiliary Manifold (Refer to page 166)	1
16	50000	WSHR M06 ZP Standard Flat	4
17	50047	NNYL M06X1.00 08 ZP Nylock	2
18	50134	HHCS M06-1.00X060 08 ZP F	2
19	50284	WSHR M04 ZP Standard Flat	4
23	53241	BHCS M04-0.70X016 10 ZP	4
24	92110	2.00 X 2.25 X 2.00 Polygon Bearing	2
26	93695	Retaining Ring, External Ø1.25 (1-1/4) Shaft	4
29	95115	Cable Track, 26 Link	1
30	95121	Transducer, Draw Wire	1
	32276	Harness Adapter	1
31	95179	Height Sensor	1

When replacing the DAS brand sensor, also order 32276 harness.

Boom Assembly, Boom Extend Cylinder

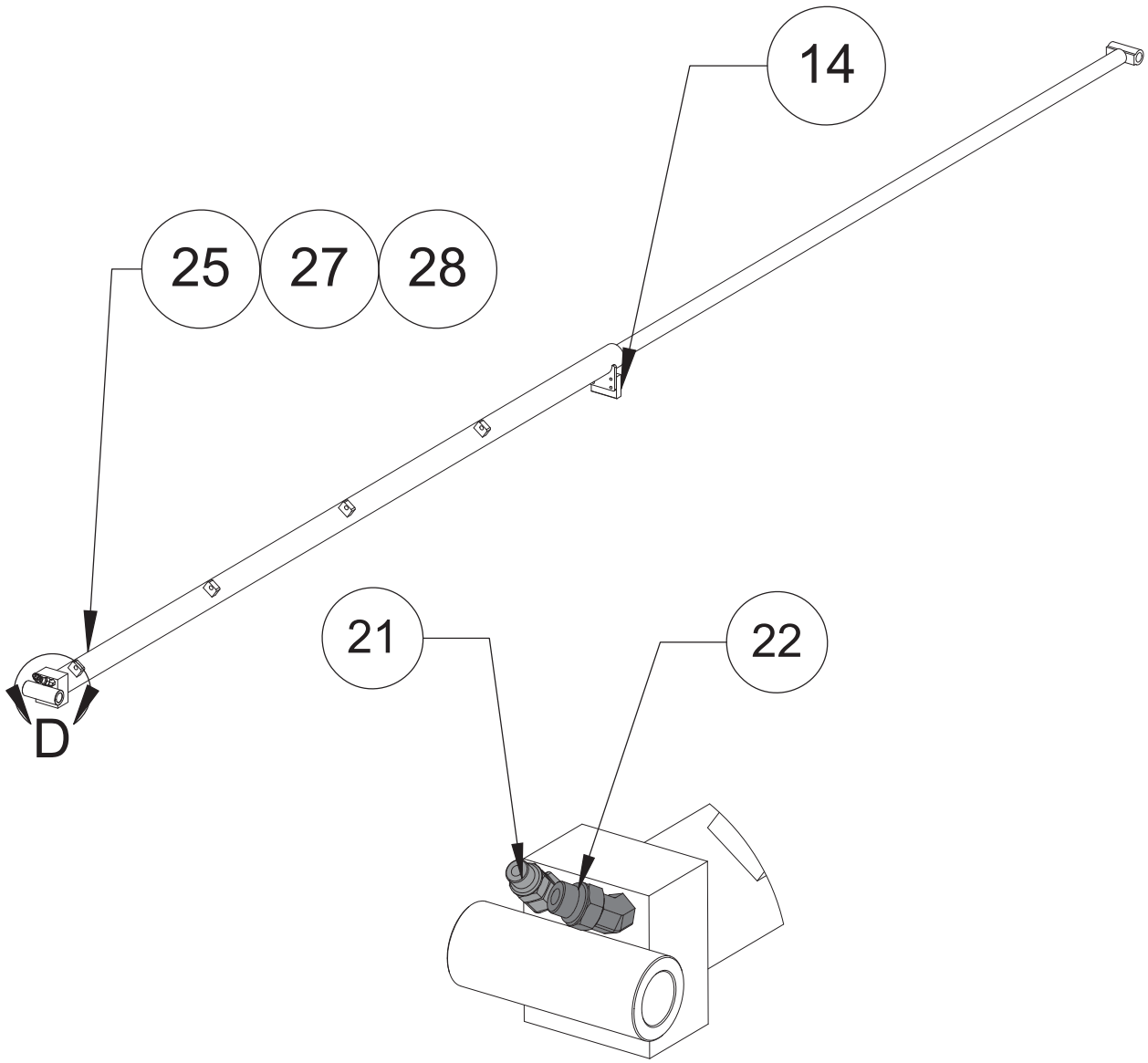

DETAIL D
SCALE 1 : 6

HOSES & BOOM HARNESSES ON NEXT PAGE

ILLUSTRATION No. Art_5702 34-J Boom Assembly

Item	Part Number	Description	Qty.
14	32239	Wearpad, Extend Cyl.	1
21	50676	HYFT MFFOR-MB45-06-06	1
22	51307	HYFT MFFOR-MB45-8-6 ; FS6802-08-06	1
25	92522	2500 PSI, CB Valve	1
27	94536	2000 PSI, CB Valve	1
28	95094	Boom Extend Cylinder	1

Boom Hoses

Part #	Description	Hose Name	Qty.
56156	RL-RLBH	RL (On Platform Manifold) To Rotate Left Bulk Head	1
56157	RR-RRBH	RR (On Platform Manifold) To Rotate Right Bulk Head	1
56159	JU-JUBH	JU (On Platform Manifold) To Jib Up Bulk Head	1
56160	JD-JDBH	JD (On Platform Manifold) To Jib Down Bulk Head	1
56162	LU-LUBHUPPER	Level Up To Level Up Bulk Head Upper	1
56162	LD-LDBHLOWER	Level Down To Level Down Bulk Head Lower	1
56163	BHUPPER-PLCEXT	Bulk Head Upper To Platform Level Cylinder Extend	1
56163	BHLOWER-PLCRET	Bulk Head Lower To Platform Level Cylinder Retract	1

Boom Electrical Harness

Qty	Part #:	Description
1	32261	Harness, Platform Valve Assembly (Leveling)
1	32276	Harness, Transducer, Draw Wire Connector
90'	9441	Cable, 110V Power To Platform

Base Boom Assembly

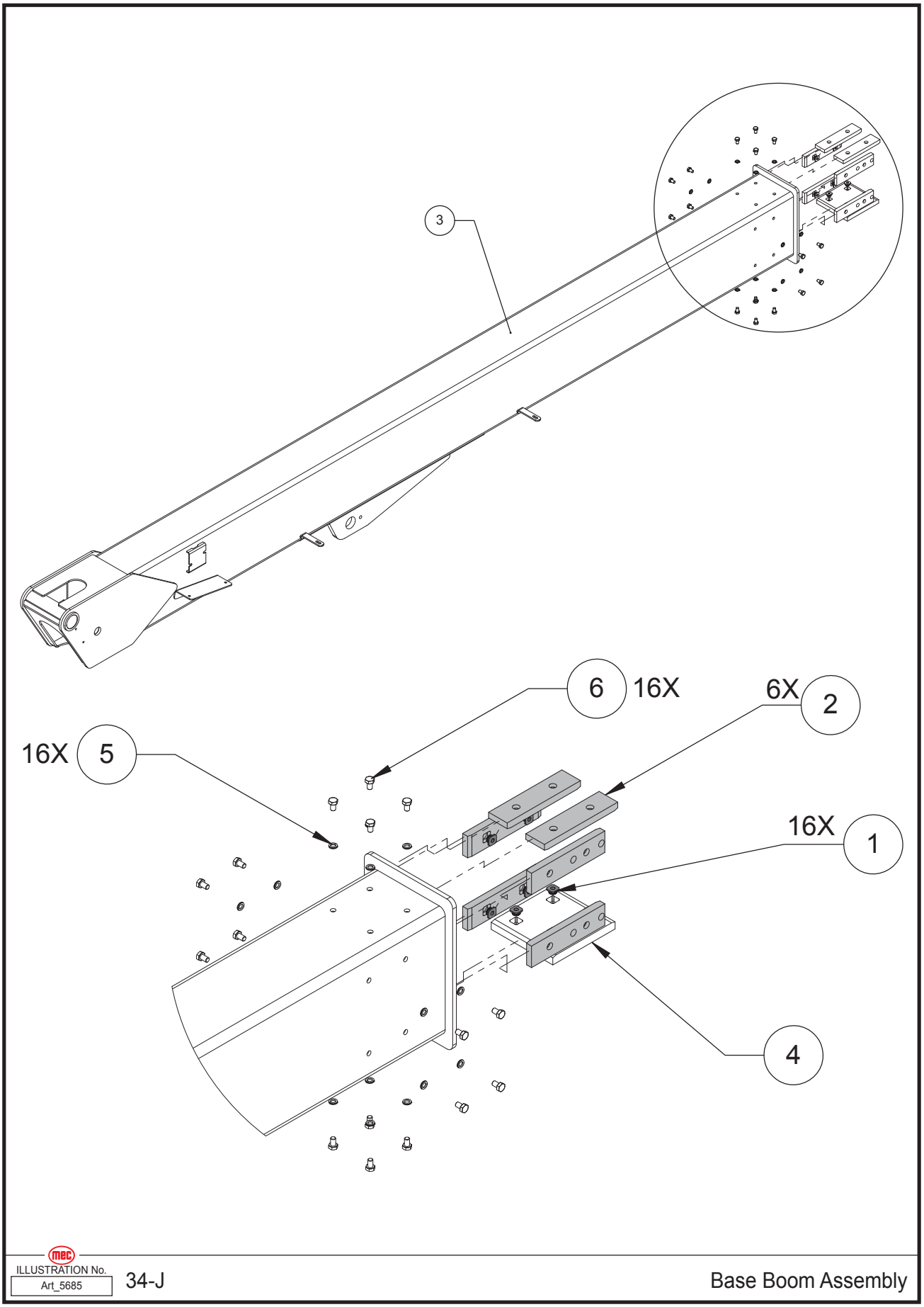

ILLUSTRATION No. Art_5685 34-J Base Boom Assembly

Item	Part Number	Description	Qty.
--	32120	Base Boom Assembly	--
1	22541	M10 X 1.5 Insert	16
2	24339	Side Wear Pad	6
3	32140	Weldment, Base Boom	1
4	32233	Inner Tube Slide Block, High Load	1
5	50006	WSHR M10 ZP Nordlock	16
6	50573	HHCS M10-1.50X016 08 ZP F	16

Boom Tip Assembly

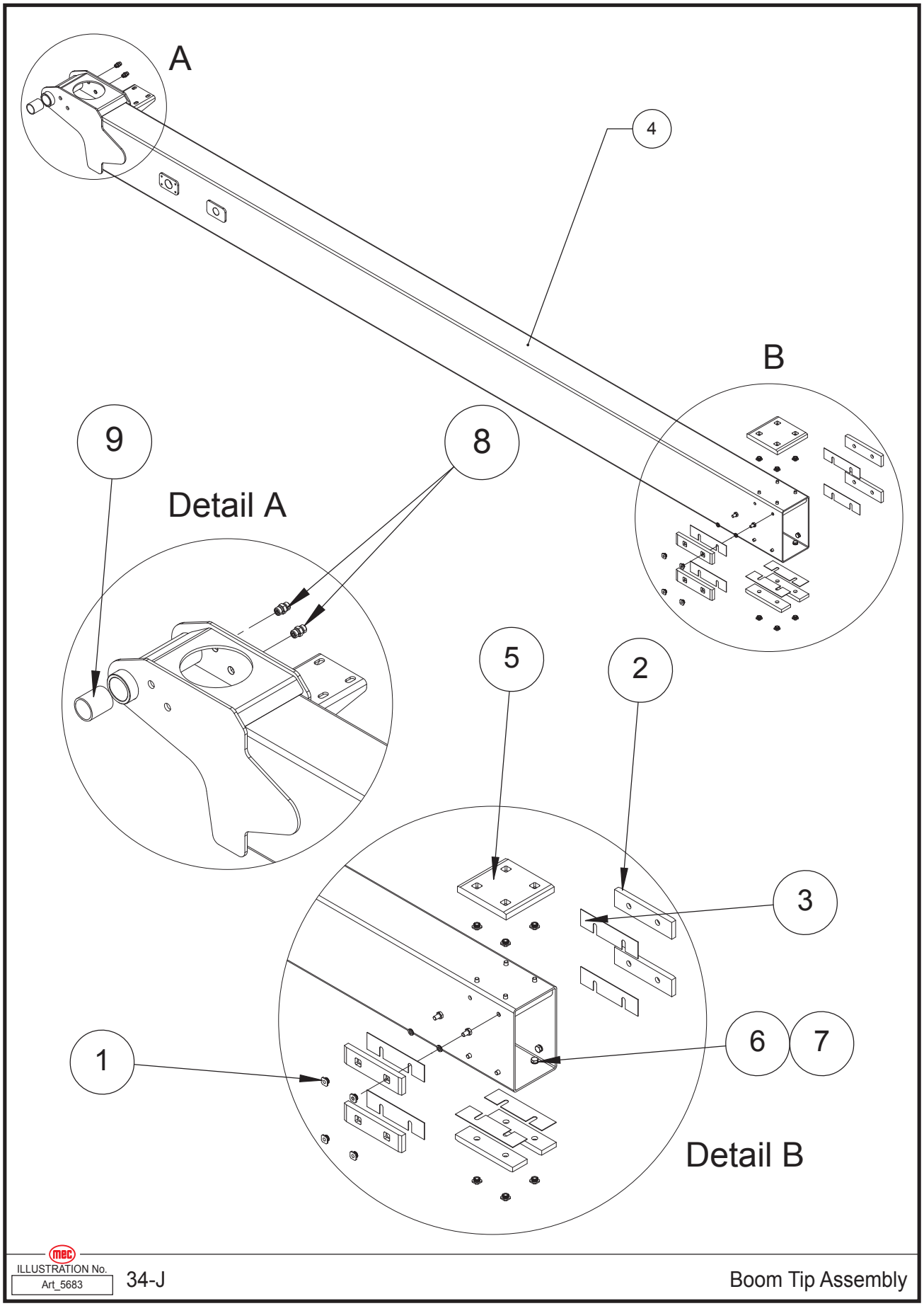

ILLUSTRATION No. Art_5683 34-J Boom Tip Assembly

Item	Part Number	Description	Qty.
--	32121	Boom Tip Assembly	--
1	22541	M10 X 1.5 Insert	16
2	24339	Side Wear Pad	6
3	28775	Shim, Wear Pad, 16GA. (.060)	REF.
4	32141	Tip Boom, Weldment	1
5	32233	Inner Tube Slide Block, High Load	1
6	50006	WSHR M10 ZP Nordlock	16
7	50573	HHCS M10-1.50X016 08 ZP F	16
8	50862	HYFT MFFOR-MFFOR-4-4; FS2403-04-04	2
9	92214	1.50 X 1.75 X 2.00 Polygon Bearing	2

REF - Reference

Front Axle Assembly

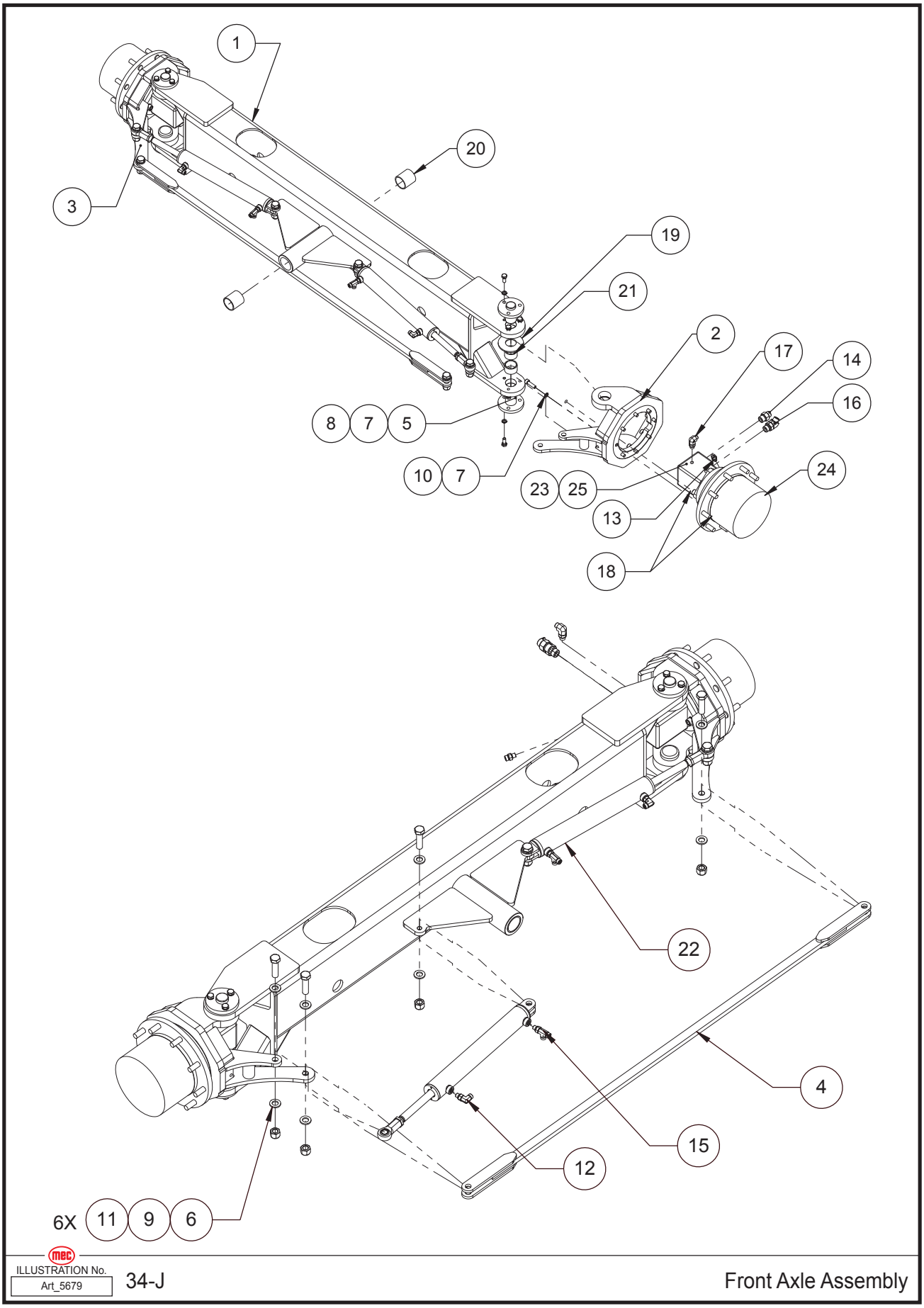

ILLUSTRATION No. Art_5679 34-J Front Axle Assembly

Item	Part Number	Description	Qty.
--	32100	Front Axle Assembly	--
1	32010	Weldment, Front Axle	1
2	32020	Weldment, RH Yoke	1
3	32030	Weldment, LH Yoke	1
4	32045	Weldment, Tie Rod	1
5	32324	Pin, Trunnion	4
6	50004	WSHR M16 ZP Standard Flat	12
7	50006	WSHR M10 ZP Nordlock	28
8	50033	HHCS M10-1.50X025 08 ZP F	12
9	50044	HHCS M16-2.00X060 10 ZP F	6
10	50440	SHCS M10-1.50X040 12 ZP F	16
11	50569	NNYL M16X2.00 12.9 ZP Nylon Insert	6
12	50673	HYFT MFFOR-MB90 4-4	2
13	50831	HYFT MFFOR-MB-4-4	2
14	50837	HYFT MFFOR-MB-8-10	2
15	50858	HYFT MFFOR-MB-MFFORT-4 ; Tee	2
16	51067	HYFT MB-MFFOR45 8-10	2
17	51298	HYFT MB-MFFOR90 4-6	2
18	83242	Assembly, VB04/357160 Side Port	2
19	92341	1.51"X3.5"X3/16" Thrust Washer	2
20	95061	1.75 X 2.00 X 2.00 Polygon Bearing	2
21	95062	1.50 X 1.75 X 1.00 Polygon Bearing	4
22	95217	Cylinder, Steering	2
--	95722	Seal Kit	1
23	94863	Drive Motor	2
24	93710	Reducer	1
25	94756	O-Ring (One Used Per Wheel)	4

Main Manifold Valves

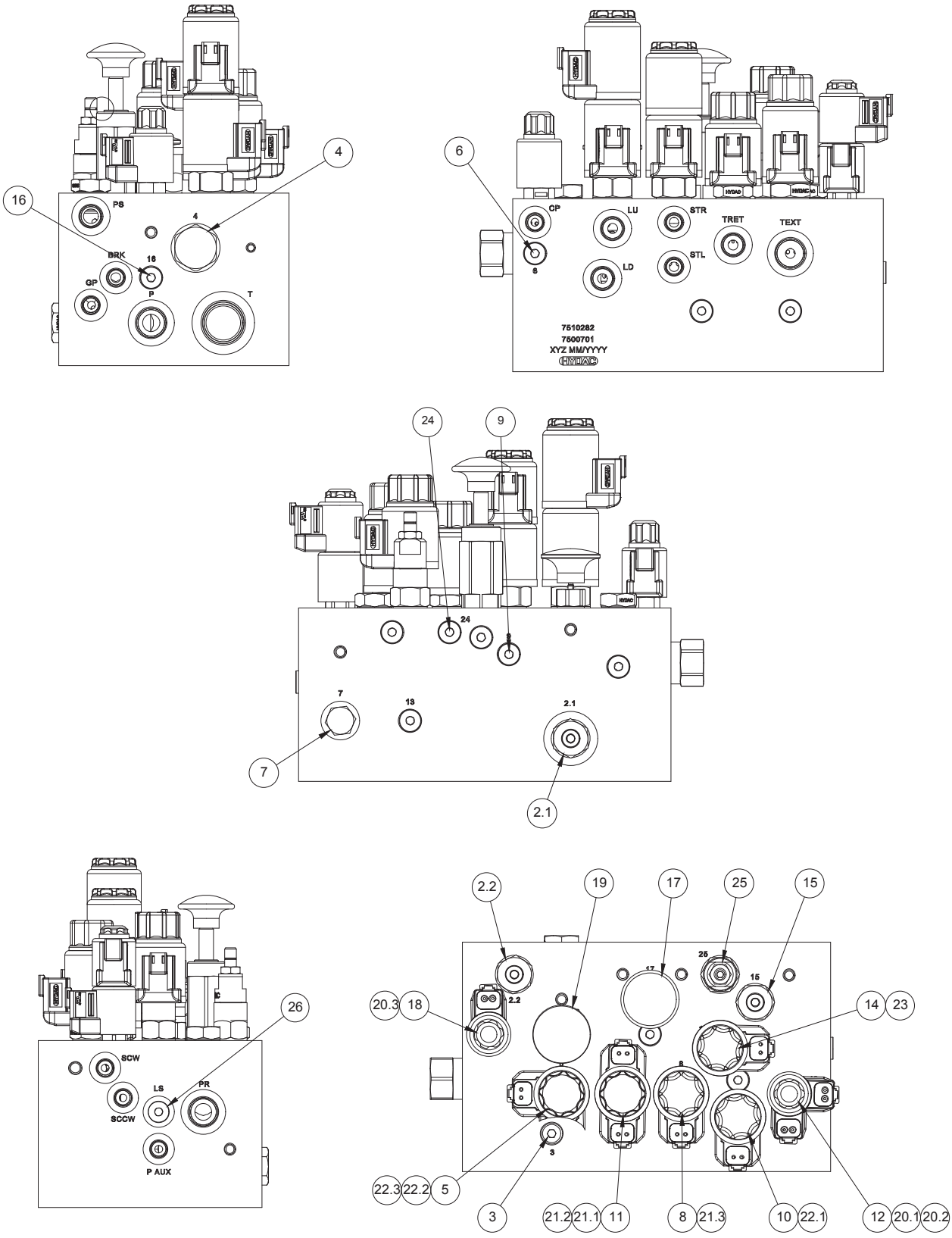

ILLUSTRATION No. Art_5739 34-J Main Manifold Valves

Item	Part Number	Description	Qty.
1	95084	Manifold Assembly	1
2.1, 2.2	94067	Check Valve	2
3	94069	Shuttle Valve	1
4	94072	Flow Compensator	1
5	94031	Boom Lift/Lower Valve	1
6	94077	Orifice	1
7	95344	Check Valve	1
8	95345	Boom EXT/RET Valve	1
9	95346	Orifice	1
10	95347	Boom EXT Valve	1
11	95348	Steer DIR Valve	1
12	94036	Turret Rotate Valve	1
13	--	--	--
14	95337	Proportional Relief	1
15	94217	Check Valve	1
16	94088	Orifice	1
17	95338	Manual Pump	1
18	94087	Brake Release Valve	1
19	95339	Manual Brake Valve	1
20.1–20.3	94082	Coil	3
21.1-21.3	94083	Coil	3
22.1-22.3	94081	Coil	3
23	95340	Coil	1
24	95341	Orifice	1
25	95342	Relief Valve	1
26	95343	Port Plug	1

Main Manifold Assembly

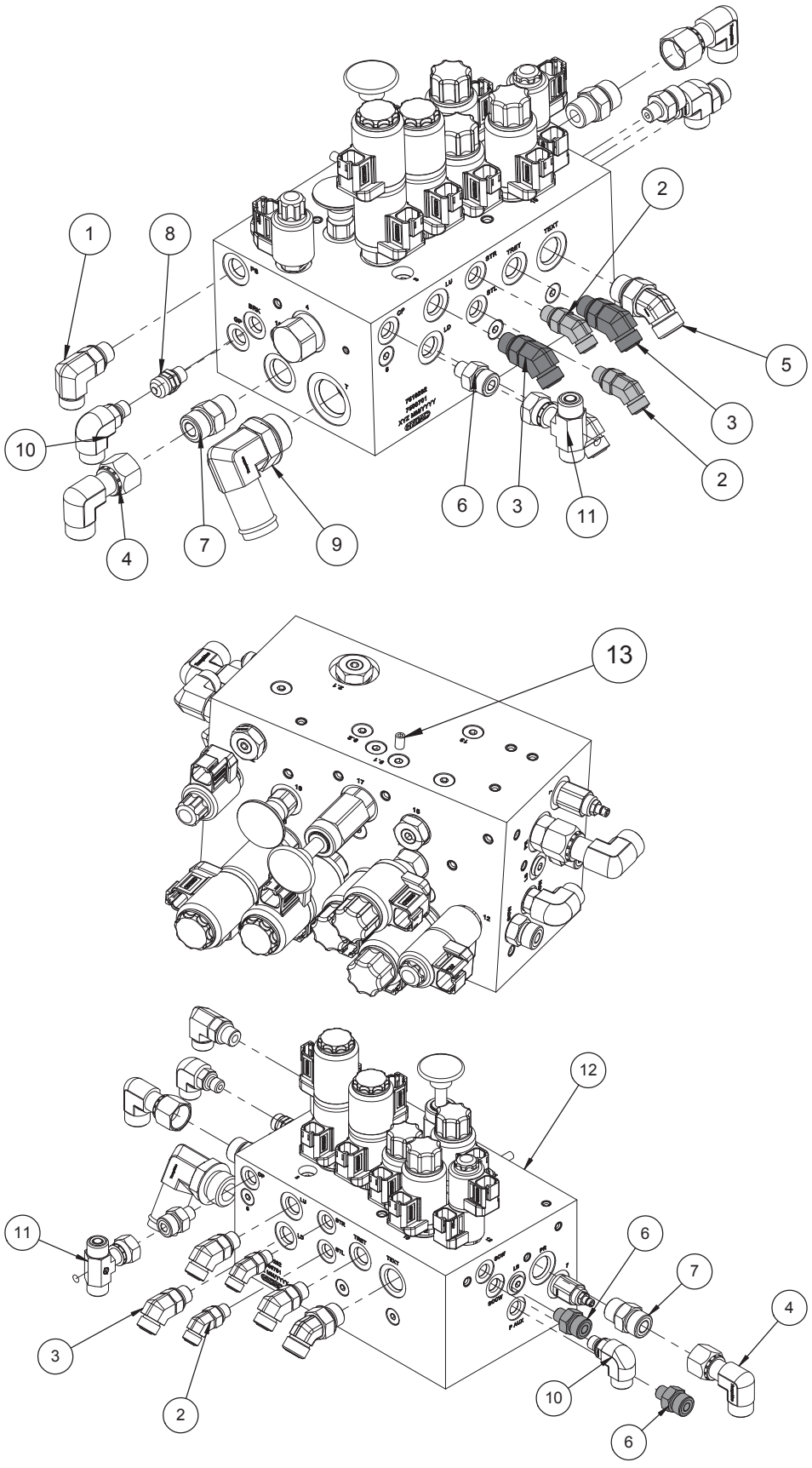

ILLUSTRATION No.
Art_5691

34-J

Main Manifold Assembly

Item	Part Number	Description	Qty.
--	32257	Assembly, Main Manifold	--
1	50674	HYFT MFFOR-MB90-06-06	1
2	50675	HYFT MFFOR-MB45-04-04	2
3	50676	HYFT MFFOR-MB45-06-06	3
4	50807	HYFT MFFOR-FFORX90-8-8 ; FS6500-08-08	2
5	50819	HYFT MFFOR-MB45-8-8; FS6802-08-08-FG	1
6	50820	HYFT MFFOR-MB-6-4 ; FS6400-06-04-O	3
7	50841	HYFT MFFOR-MB-8-8 ; FS6400-08-08-O	2
8	50974	HYFT TPO-4	1
9	51004	HYFT 16HOSE-12MB 90; 4601-16-12	1
10	51083	HYFT MFFOR-MB90-06-04	2
11	51312	FS6600-06-06-06-SS	1
12	95084	Main Manifold	1
13	95375	Orifice 1/4-20X5/16 1.30mm	1

Manifold Case Drain Assembly

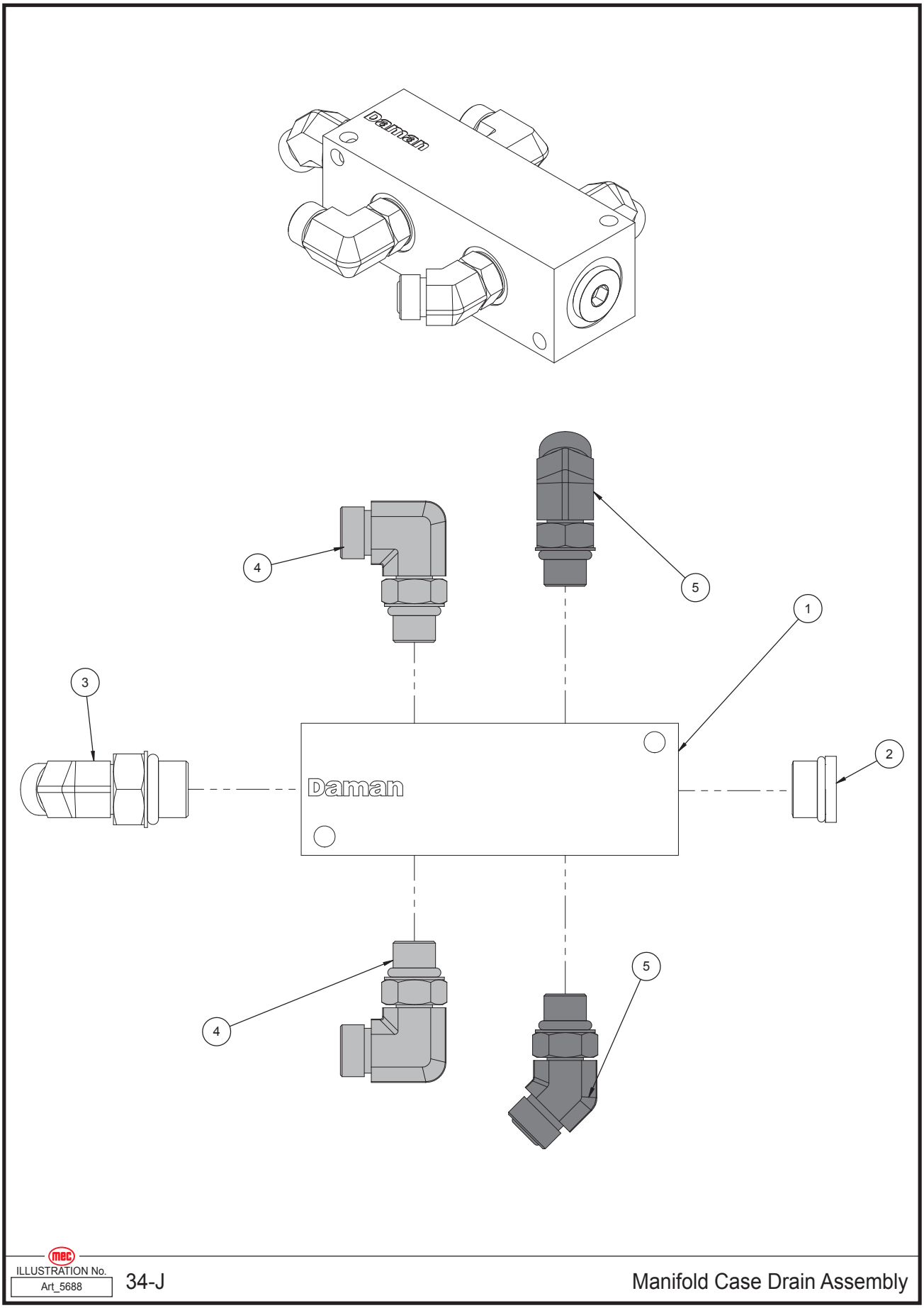

ILLUSTRATION No. Art_5688 34-J Manifold Case Drain Assembly

Item	Part Number	Description	Qty.
--	32255	Manifold Case Drain Assembly	--
1	93863	Header Manifold	1
2	51098	HYFT MB-08-PLUG	1
3	50816	HYFT MFFOR-MB45-6-8 ; FS6802-06-08	1
4	50674	HYFT MFFOR-MB90-06-06	2
5	50676	HYFT MFFOR-MB45-06-06	2

Auxiliary Manifold Valves

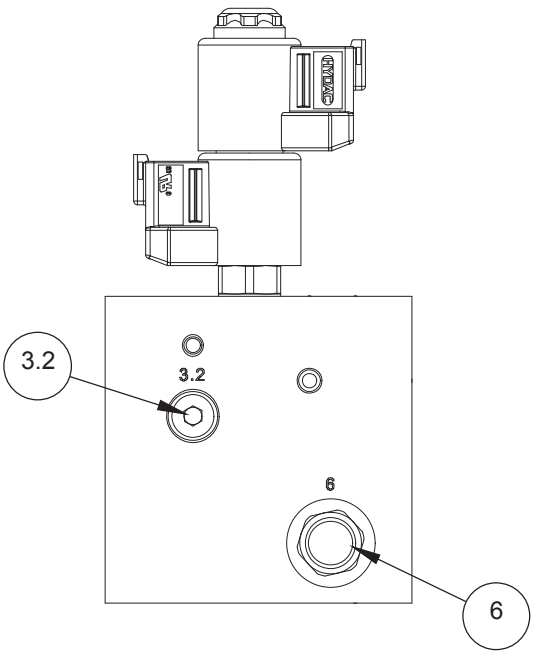

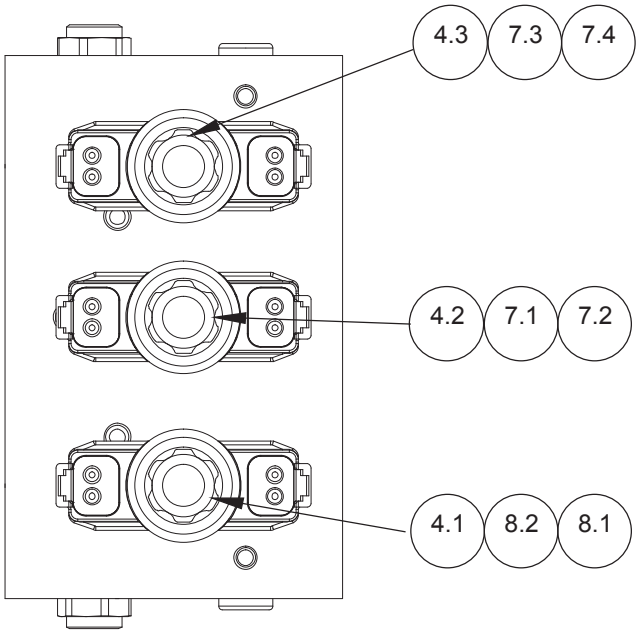

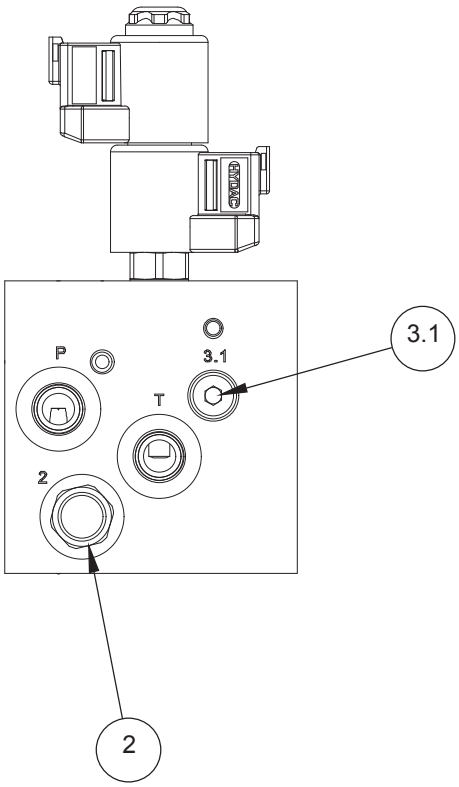

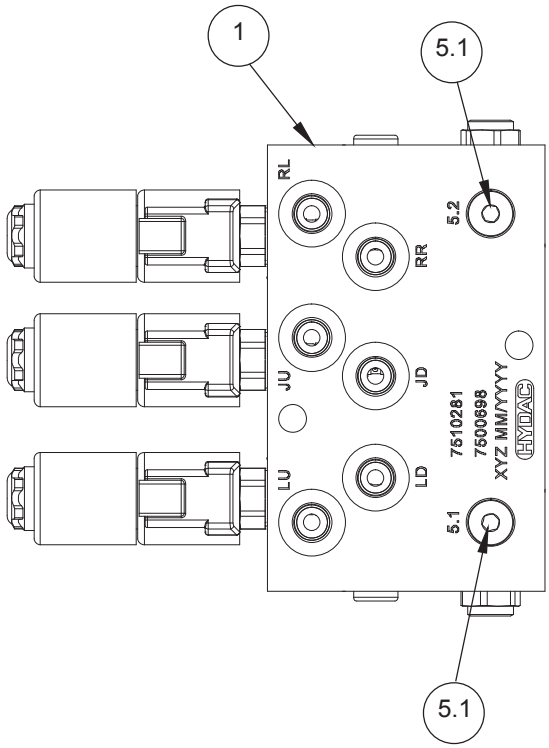

ILLUSTRATION No. Art_5740 34-J Auxiliary Manifold Valves

Item	Part Number	Description	Qty.
1	95085	Micro Boom Auxiliary Manifold	1
2	94079	Valve, Pilot Operated Directional Control	1
3.1, 3.2	94069	Valve, Load Shuttle	2
4.1, 4.2, 4.3	94036	Valve, Proportional	3
5.1, 5.2	94077	Orifice	2
6	94079	Valve, Pilot Operated Directional Control	1
7.1 – 7.4	94082	Coil	4
8.1, 8.2	95351	Coil	2

Auxiliary Manifold Assembly

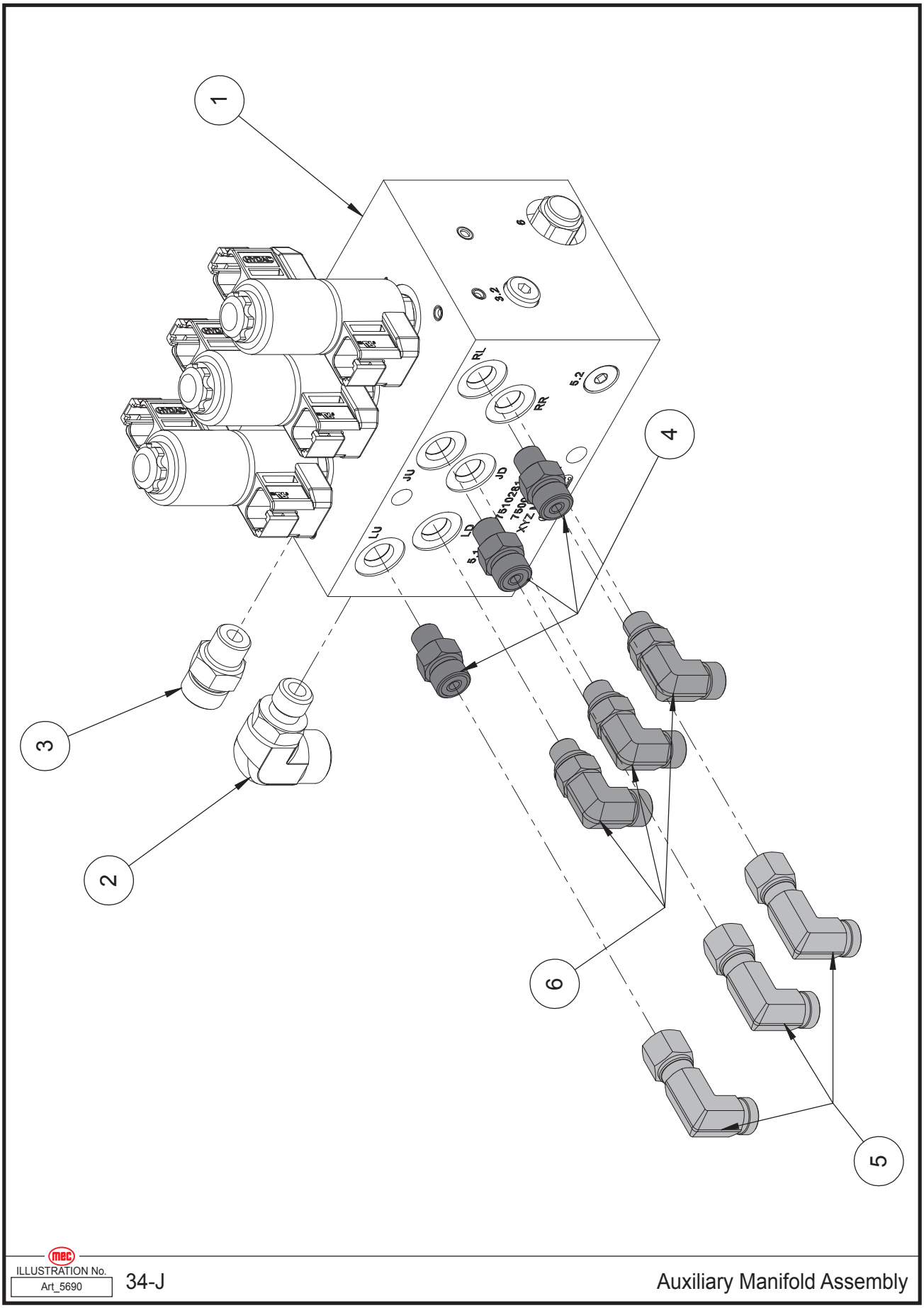

ILLUSTRATION No. Art_5690 34-J Auxiliary Manifold Assembly

Item	Part Number	Description	Qty.
--	32256	Auxiliary Manifold Assembly	--
1	95085	Auxiliary Manifold	1
2	51084	HYFT MFFOR-MB90-08-06; 6801-08-06	1
3	50835	HYFT MFFOR-MB-6-6	1
4	50831	HYFT MFFOR-MB-4-4	3
5	50671	HYFT MFFOR-FFORX90-04-04	3
6	50673	HYFT MFFOR-MB90 4-4	3

Danfoss Pump Assembly

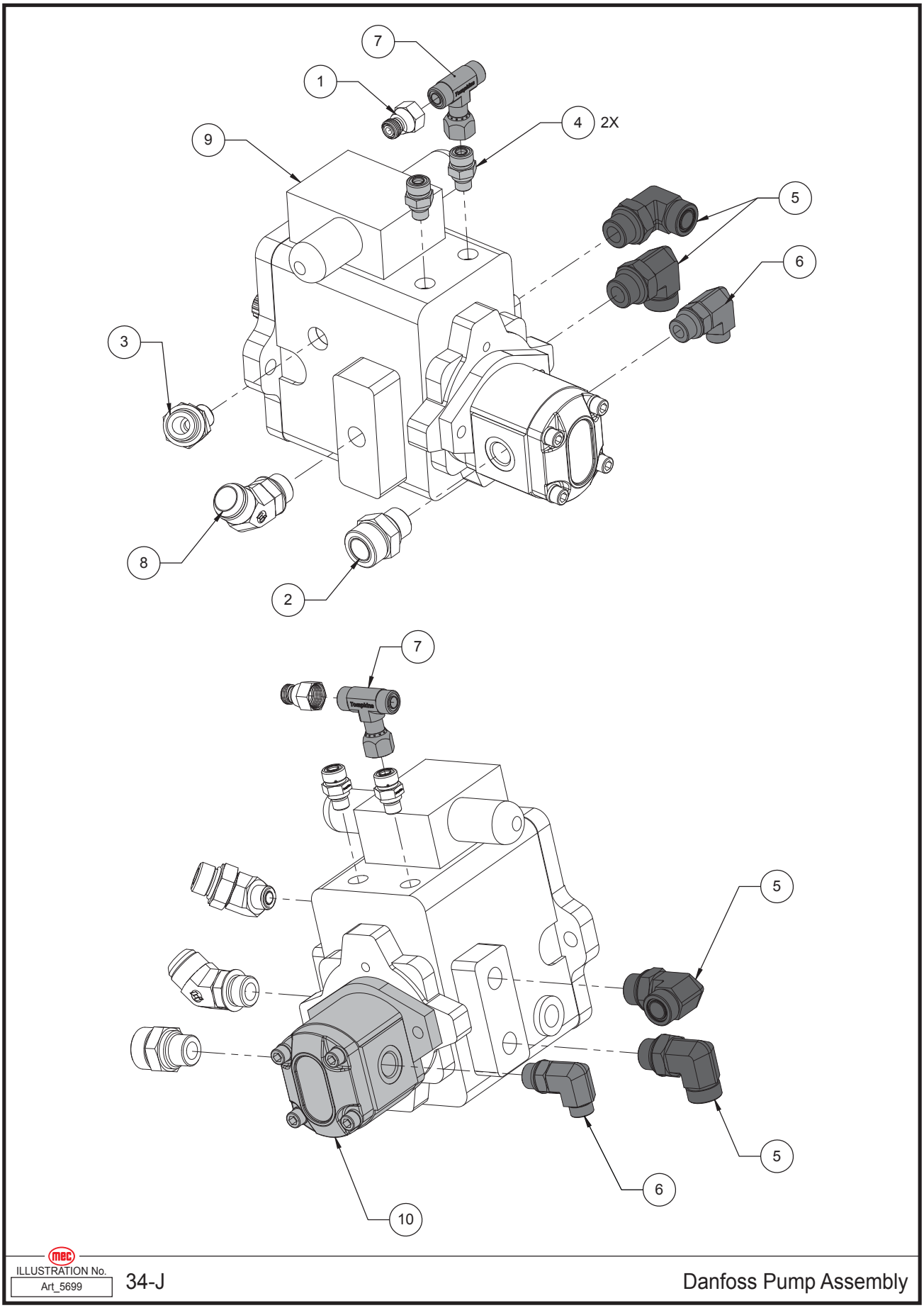

ILLUSTRATION No. Art_5699 34-J Danfoss Pump Assembly

Item	Part Number	Description	Qty.
1	50804	HYFT MFFOR-FFORX-6-8 ; FS2406-08-06	1
2	50806	HYFT MFFOR-MB-16-12	1
3	50817	HYFT MFFOR-MB45-8-12	1
4	50840	HYFT MFFOR-MB-8-6 ; FS6400-08-06-O	2
5	50843	HYFT MFFOR-MB90-12-12	2
6	50848	HYFT MFFOR-MB90-8-10	1
7	50975	HYFT MFFOR-MFFOR-FFORX-08 ; FS6600-08-08-08	1
8	51313	HYFT MJ-MB45-16-12 ; 6802-16-12-NOW-FG	1
9	94795	28CC Closed Loop Drive Pump	1
10	95365	Rexroth Pump, 10CC	1

Auxiliary Pump Assembly

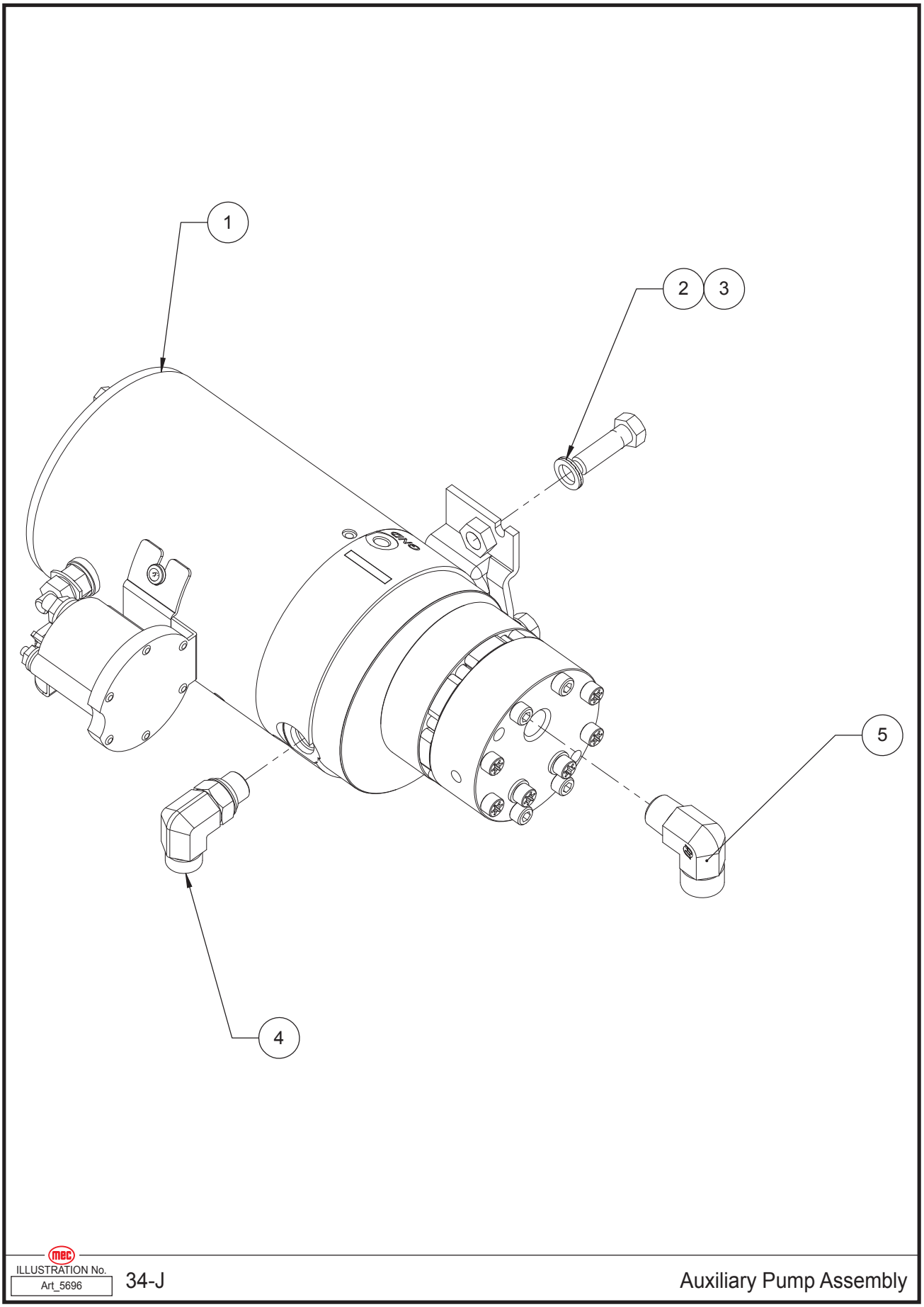

ILLUSTRATION No. Art_5696 34-J Auxiliary Pump Assembly

Item	Part Number	Description	Qty.
1	17973	Auxiliary Pump, 12 VDC	1
2	50006	WSHR M10 ZP Nordlock	2
3	50467	HHCS 3/8"-16 x 1.25 ZP	2
4	50674	HYFT MFFOR-MB90-06-06	1
5	51309	HYFT MP-MFFOR 6-8	1

Hydraulic Tank Assembly

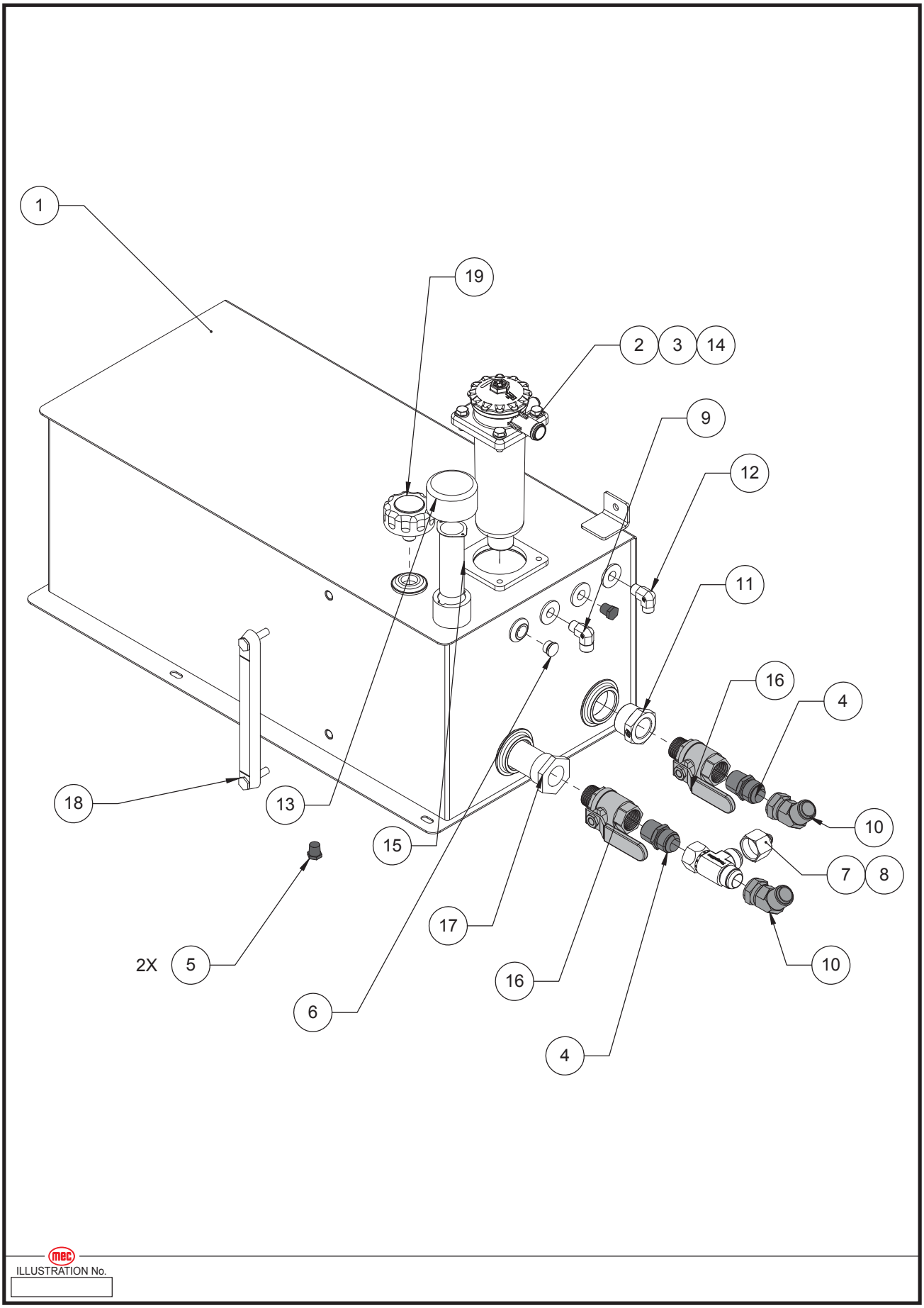

Item	Part Number	Description	Qty.
--	32086	Hydraulic Tank Assembly	--
1	32077	Hydraulic Tank Weldment	1
2	50002	WSHR M10 ZP Standard Flat	4
3	50034	HHCS M10-1.50X030 08 ZP F	4
4	50908	HYFT MJ-MP-16-16	2
5	51006	3/8" NPT 5406-P-06	2
6	51026	HYFT MP-08 Plug	1
7	51030	HYFT MJ-FJ-08-16 Reducer	1
8	51031	HYFT MJ-FJX-MJT-16	1
9	51162	HYFT MP-MFFOR 6-8	1
10	51191	HYFT MJ-FJX45-16-16; 6502-16-16	2
11	51308	MP-FP-24-16	1
12	51310	HYFT MP-MFFOR90 6-6	1
13	92335	Filler Breather Cap	1
14	92565	Internal Filter	1
--	92924	Element, Filter	1
15	92967	Screen, Fill Neck	1
16	93123	Ball Valve, 1" NPT, Female X Male, Brass	2
17	93706	Strainer, 1-1/2" MNPT X 1" FNPT	1
18	93816	Sight Level Gauge	1
19	95519	Pressurized Tank Breather, 3/4" NPT	1

Charge Filter Assembly

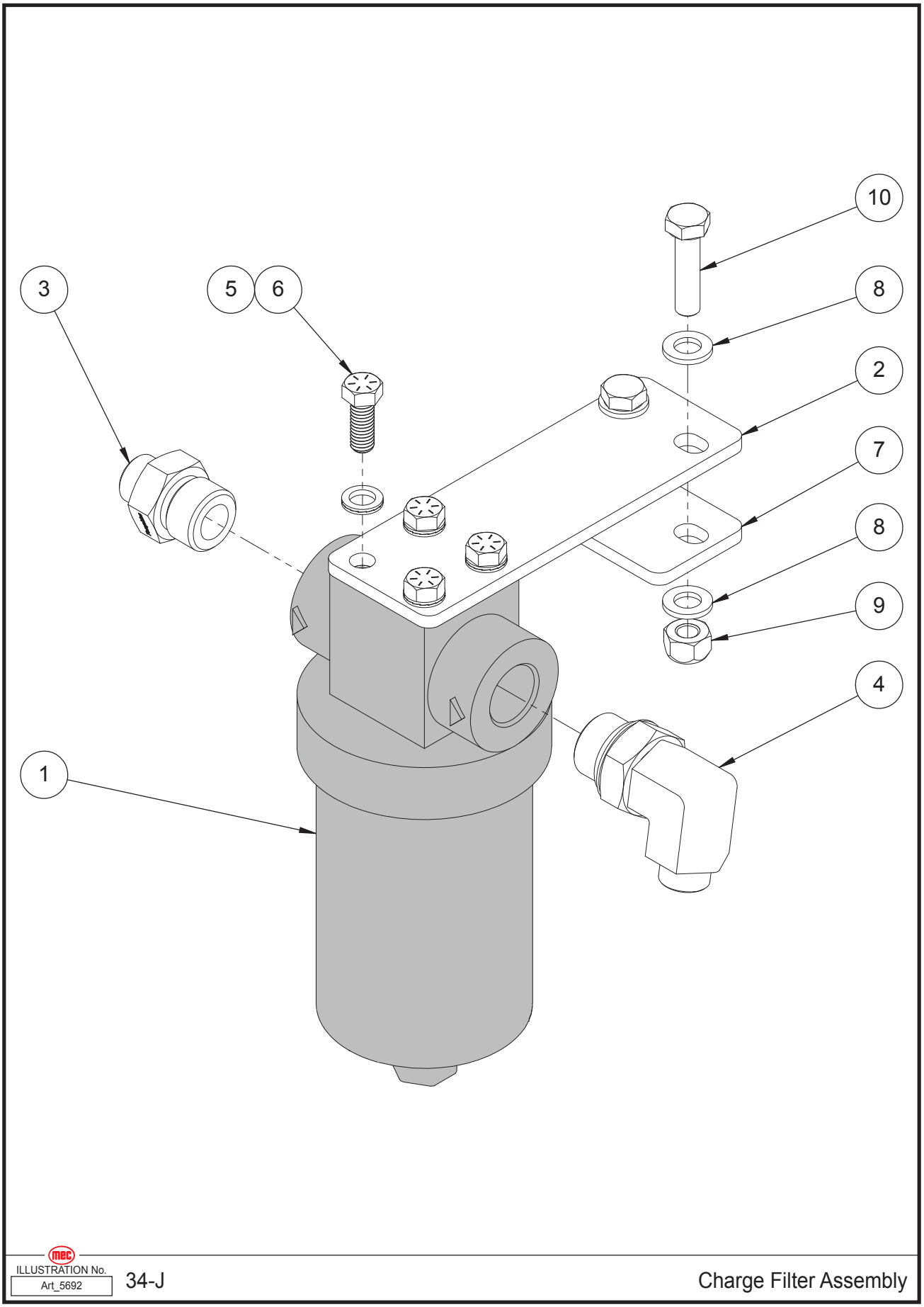

ILLUSTRATION No. Art_5692 34-J Charge Filter Assembly

Item	Part Number	Description	Qty.
--	32258	Charge Filter Assembly	--
1	92072	Charge Pump Filter	1
--	92169	Filter Element	--
2	32314	Mount, HYD Filter	1
3	50838	HYFT MFFOR-MB-8-12 ; FS6400-08-12-O	1
4	50849	HYFT MFFOR-MB90-8-12 ; FS6801-08-12-FG	1
5	50006	WSHR M10 ZP Nordlock	4
6	53190	HHCS 3/8"-16 X 1" ZP	4
7	32357	Doubler Plate, HYD. Charge Filter	1
8	50002	WSHR M10 ZP Standard Flat	4
9	50049	NNYL M10X1.50 08 ZP Nylon Inse	2
10	50035	HHCS M10-1.50X040 08 ZP F	2

Telescope Cylinder Assembly

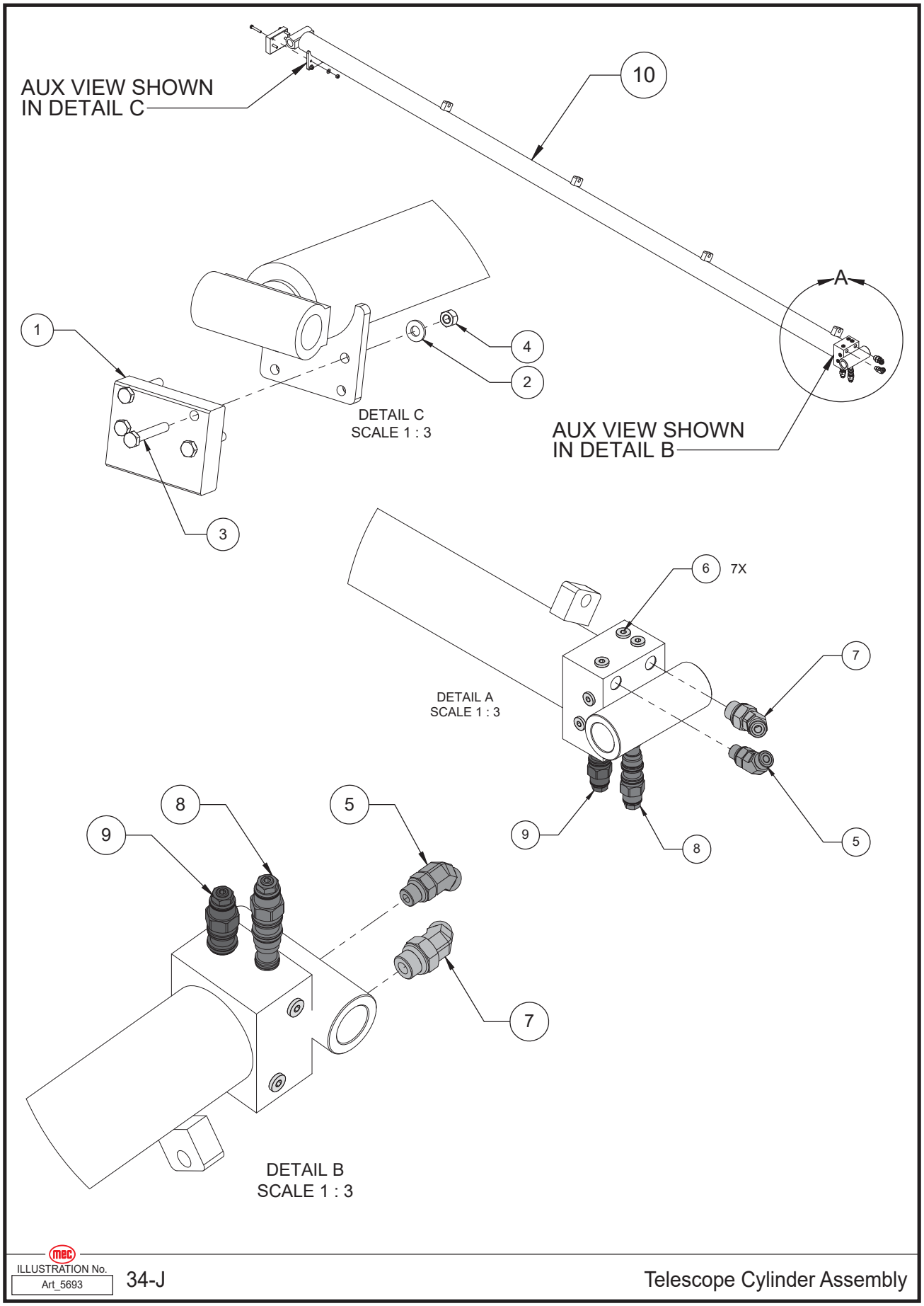

ILLUSTRATION No. Art_5693 34-J Telescope Cylinder Assembly

Item	Part Number	Description	Qty.
--	32292	Telescope Cylinder, Assembly	--
1	32239	Wearpad, Extend Cyl.	1
2	50001	WSHR M08 ZP Standard Flat	4
3	50015	HHCS M08-1.25X050 08 ZP P	4
4	50048	NNYL M08X1.25 08 ZP Nylon	4
5	50676	HYFT MFFOR-MB45-06-06	1
6	50961	HYFT MB-04-PLUG	7
7	51307	HYFT MFFOR-MB45-8-6 ; FS6802-08-06	1
8	94527	Counterbalance Valve 2500 PSI"	1
9	94536	Counterbalance Valve 2000 PSI"	1
10	95094	Boom Extend Cylinder	1

Lift Cylinder Assembly

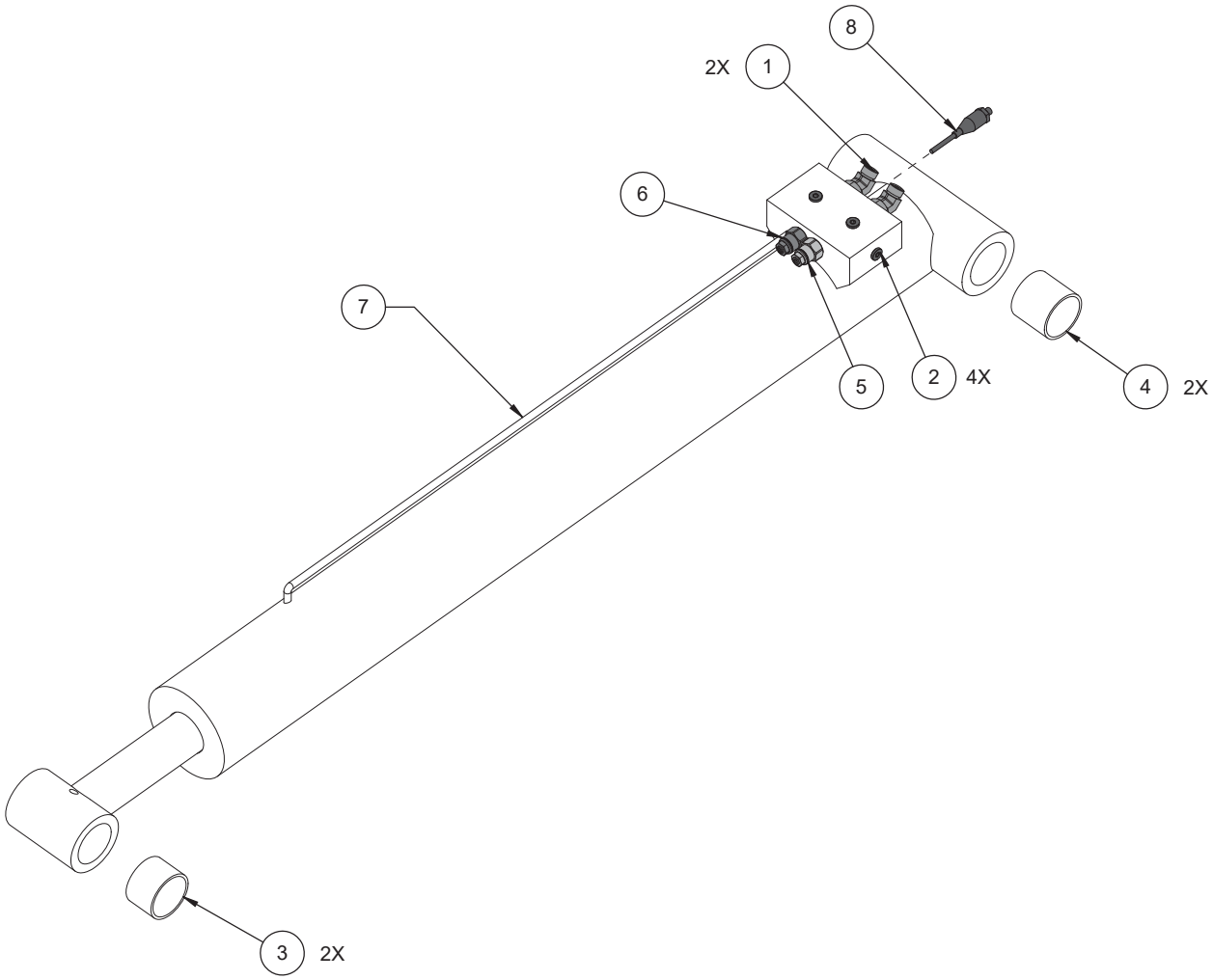

ILLUSTRATION No. Art_5707 34-J Lift Cylinder Assembly

Item	Part Number	Description	Qty.
--	32375	Lift Cylinder Assembly	--
1	50816	HYFT MFFOR-MB45-6-8 ; FS6802-06-08	2
2	50961	HYFT MB-04-PLUG	4
3	92108	2.00x2.25x1.50 NOM. Polygon Bearing	2
4	92110	2.00 X 2.25 X 2.00 Polygon Bearing	2
5	94033	HYD Counterbalance Valve 3400 PSI	1
6	94427	HYD Counterbalance Valve 3200 PSI	1
7	95092-T	Lift Cylinder, 34J	1
--	95682	Seal Kit	1
8	90845	Pressure Transducer (Machines with Overload System)	1

Telescopic Cylinder Assembly

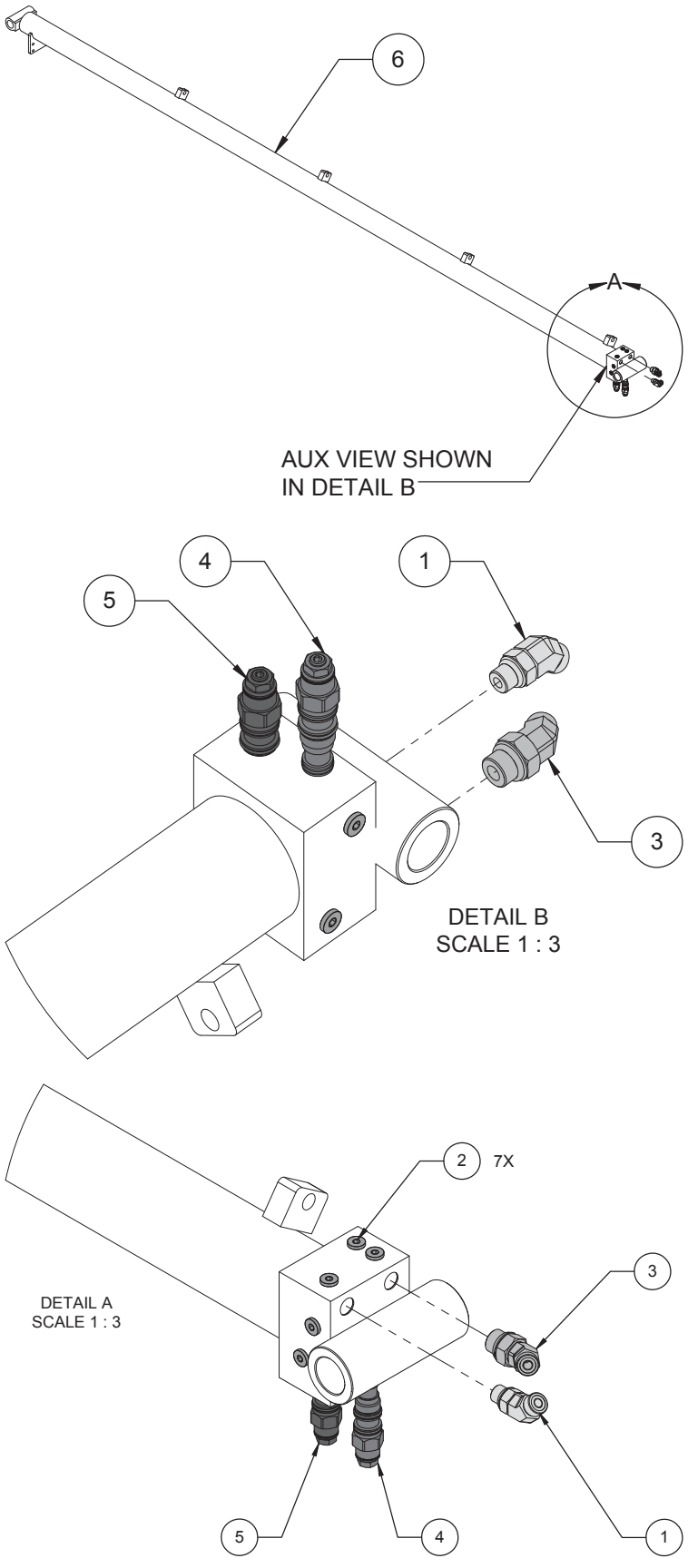

ILLUSTRATION No. Art_5708 34-J Telescopic Cylinder Assembly

Item	Part Number	Description	Qty.
--	32376	Telescopic Cylinder Assembly	--
1	50676	HYFT MFFOR-MB45-06-06	1
2	50961	HYFT MB-04-PLUG	7
3	51307	HYFT MFFOR-MB45-8-6 ; FS6802-08-06	1
4	92522	HYD Counterbalance Valve 2500 PSI	1
5	94536	HYD Counterbalance Valve 2000 PSI	1
6	95094-T	Boom Extend Cylinder	1
--	95682	Seal Kit	1

Jib Cylinder Assembly

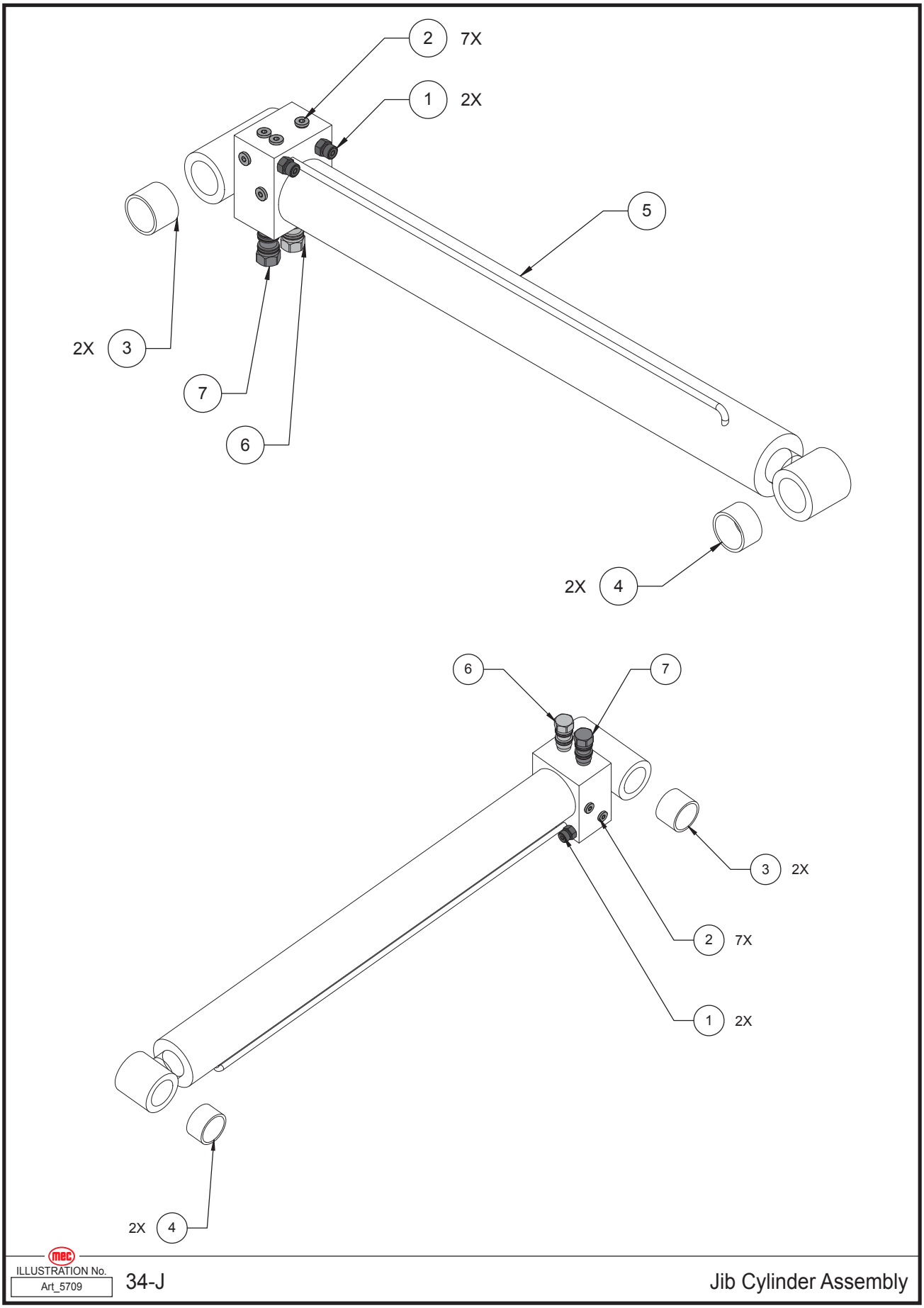

ILLUSTRATION No. Art_5709 34-J Jib Cylinder Assembly

Item	Part Number	Description	Qty.
--	32377	Jib Cylinder Assembly	--
1	50831	HYFT MFFOR-MB-4-4	2
2	50961	HYFT MB-04-PLUG	7
3	93628	Bearing 1.50 ID x 1.25 LG	2
4	95062	1.50 X 1.75 X 1.00 Polygon Bearing	2
5	95095-T	Jib Cylinder	1
6	95228	HYD Counterbalance Valve 3000 PSI	1
7	95229	HYD Counterbalance Valve 1000 PSI	1
--	95682	Seal Kit	1

Level Cylinder Assembly

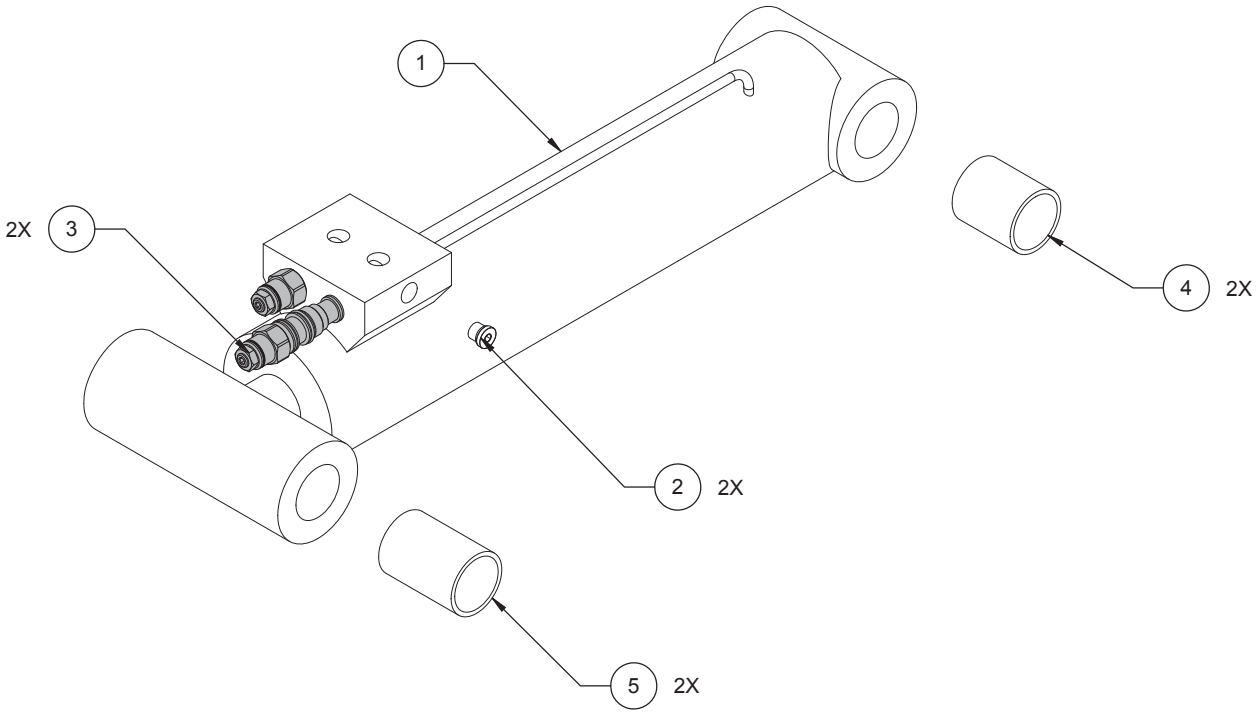

ILLUSTRATION No. Art_5710 34-J Level Cylinder Assembly

Item	Part Number	Description	Qty.
--	32378	Level Cylinder Assembly	--
1	95093-T	Level Cylinder	1
2	50961	HYFT MB-04-PLUG	2
3	94527	HYD Counterbalance Valve	2
4	92214	1.50 X 1.75 X 2.00 Polygon Bearing	2
5	93740	Bearing, Polygon, 1-1/2" ID X 1-3/4" OD X 2-1/2" Long	2
--	95683	Seal Kit	1

Axle Lock Cylinder

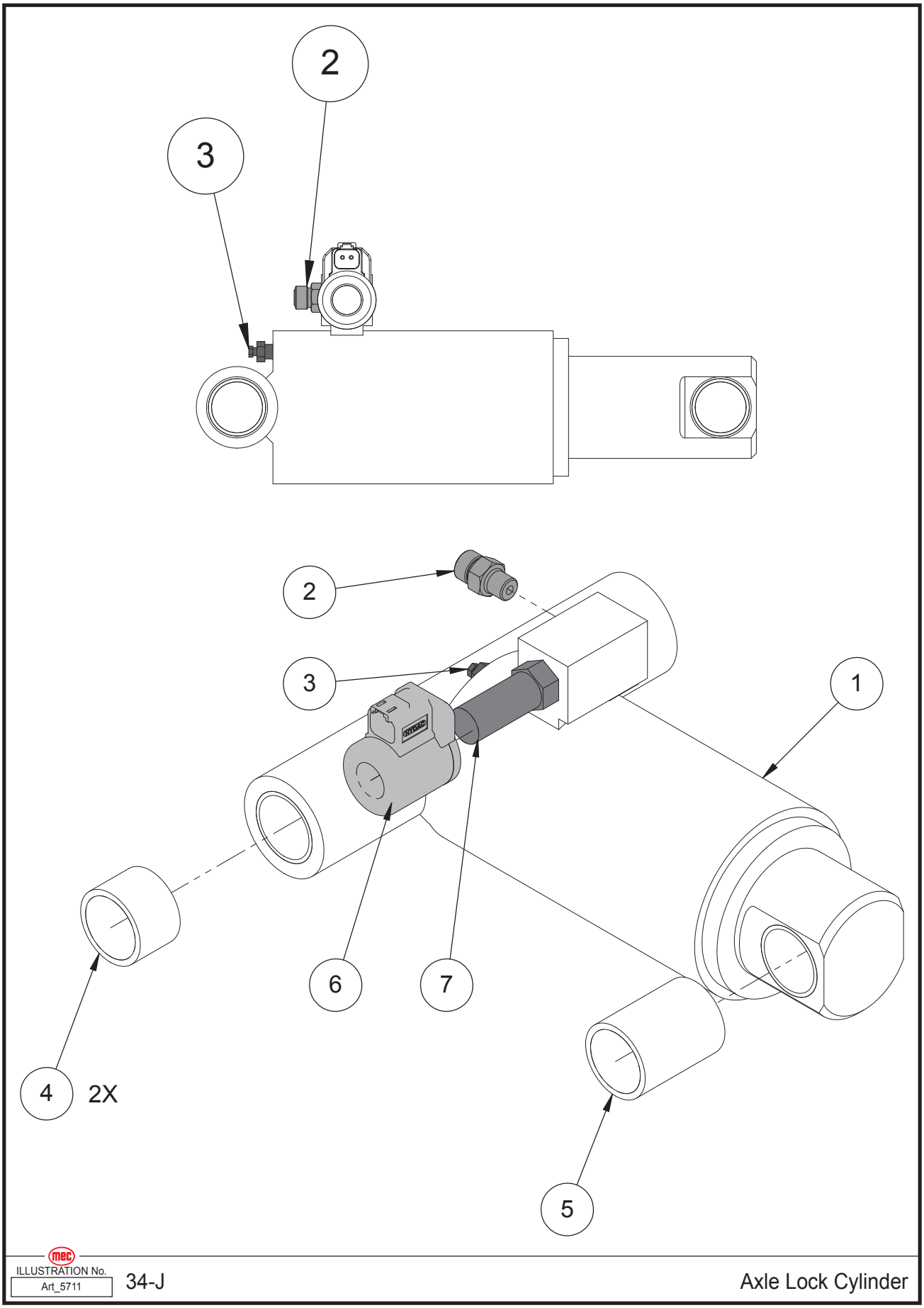

ILLUSTRATION No. Art_5711 34-J Axle Lock Cylinder

Item	Part Number	Description	Qty.
--	32379	Assembly, Axle Lock Cylinder	--
1	19087-T	Axle Lock Cylinder - Turkey	1
2	50831	HYFT MFFOR-MB-4-4	1
3	91497	Bleeder Valve MICO	1
4	92109	1.25X1.50X1.00 NOM. Polygon Bearing	2
5	92695	1.25 X 1.50 X 2.00 Polygon Bearing	1
6	94083	Coil	1
7	95637	Valve, Poppet Double Blocking	1
--	95723	Seal Kit	1

Fuel Tank Assembly

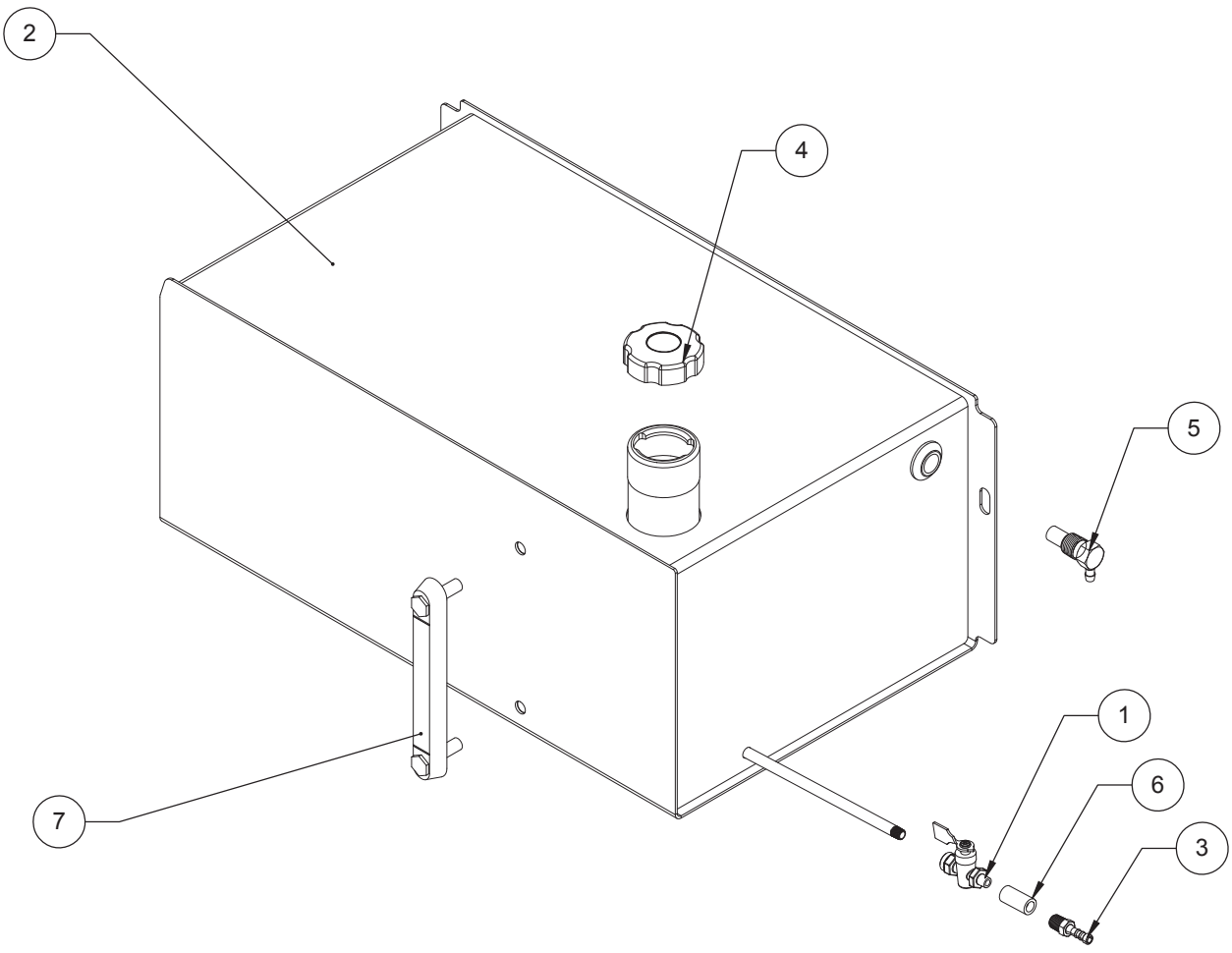

ILLUSTRATION No. Art_5677 34-J Fuel Tank Assembly

Item	Part Number	Description	Qty.
--	32087	Fuel Tank Assembly	--
1	6919	Shut Off Valve	1
2	32080	Weldment, Fuel Tank	1
3	91279	5/16" Barb Fitting	1
4	95775	Fuel Cap, Vented	1
5	92699	1/2 - 14 NPT Roll-Over Vent	1
6	94227	Coupling, 1/8 NPT, Black Forged Steel, 3000 PSI	1
7	95162	Sight Level Gauge	1

Boom Hose Routing, Interior

56163 (BHUPPER -PLCEXT / BHLOWER-PLCRET)

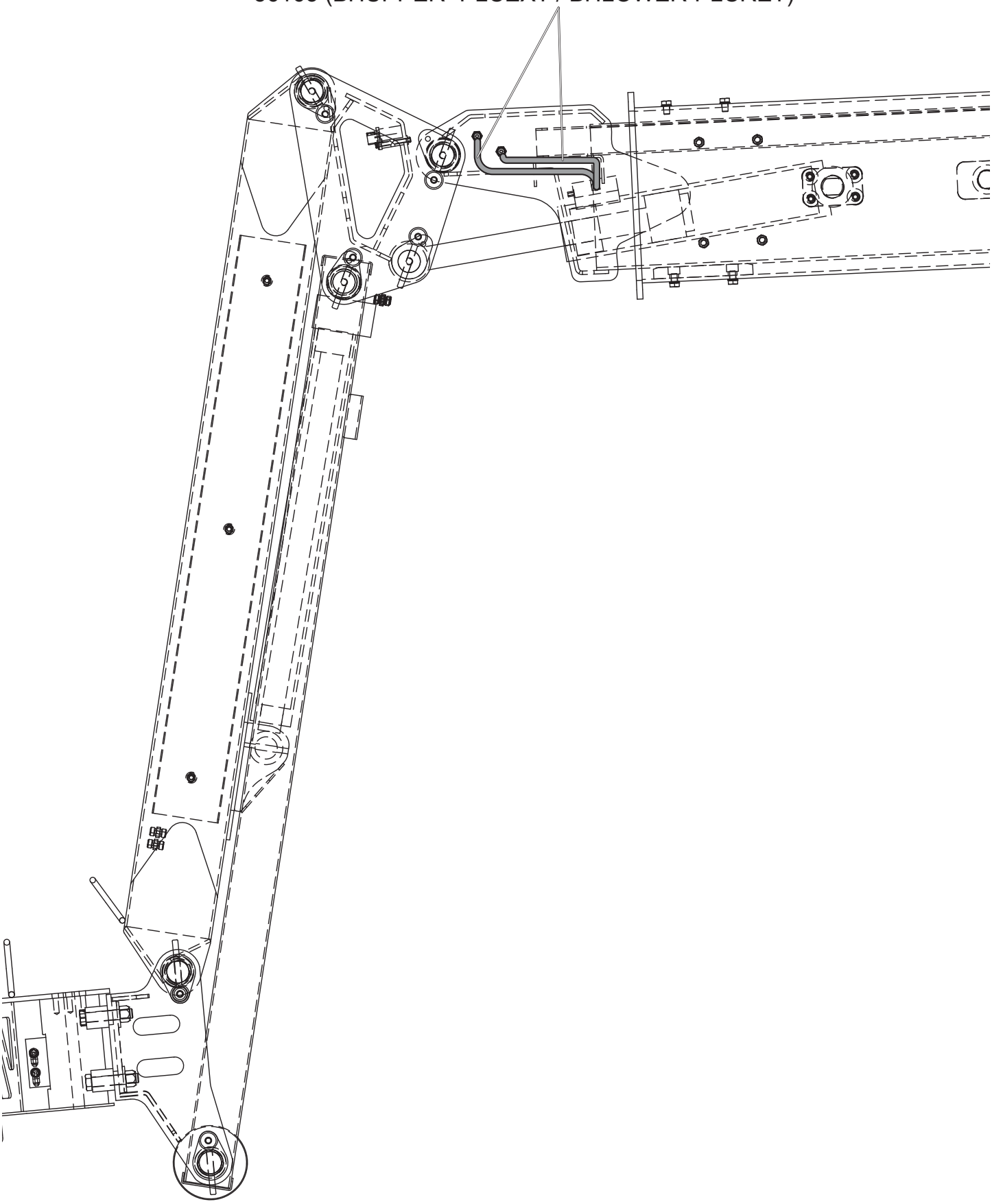

Part #	Description	Hose Name	Qty.
56163	BHUPPER -PLCEXT / BHLOWER-PLCRET	Bulk Head Upper To Platform Level Cylinder Extend / Bulk Head Lower To Platform Level Cylinder Retract	2

Boom Hose Routing, Exterior

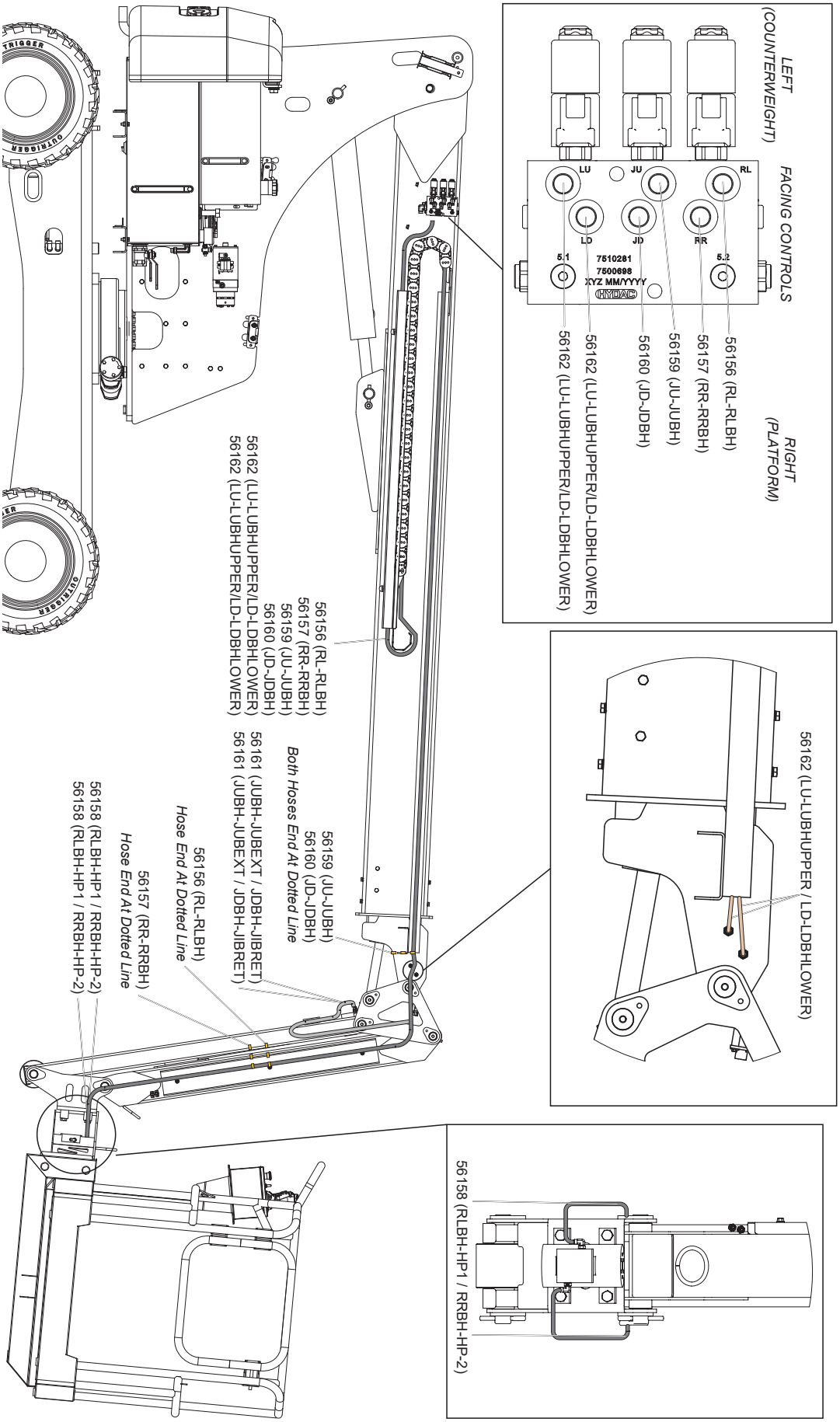

Part #	Description	Hose Name	Qty.
56156	RL-RLBH	RL (On Platform Manifold) To Rotate Left Bulk Head	1
56157	RR-RRBH	RR (On Platform Manifold) To Rotate Right Bulk Head	1
56158	RLBH-HP1 / RRBH-HP-2	Rotate Left Bulk Head To Helac Port 1 / Rotate Right Bulk Head Helac Port 2	2
56159	JU-JUBH	JU (On Platform Manifold) To Jib Up Bulk Head	1
56160	JD-JDBH	JD (On Platform Manifold) To Jib Down Bulk Head	1
56161	JUBH-JUBEXT / JDBH-JIBRET	Jib Up Bulk Head To Jib Up	2
56162	LU-LUBHUPPER/LD-LDBHLOWER	Level Up To Level Up Bulk Head Upper / Level Down To Level Down Bulk Head Lower	2

Chassis Hose Routing, Top View

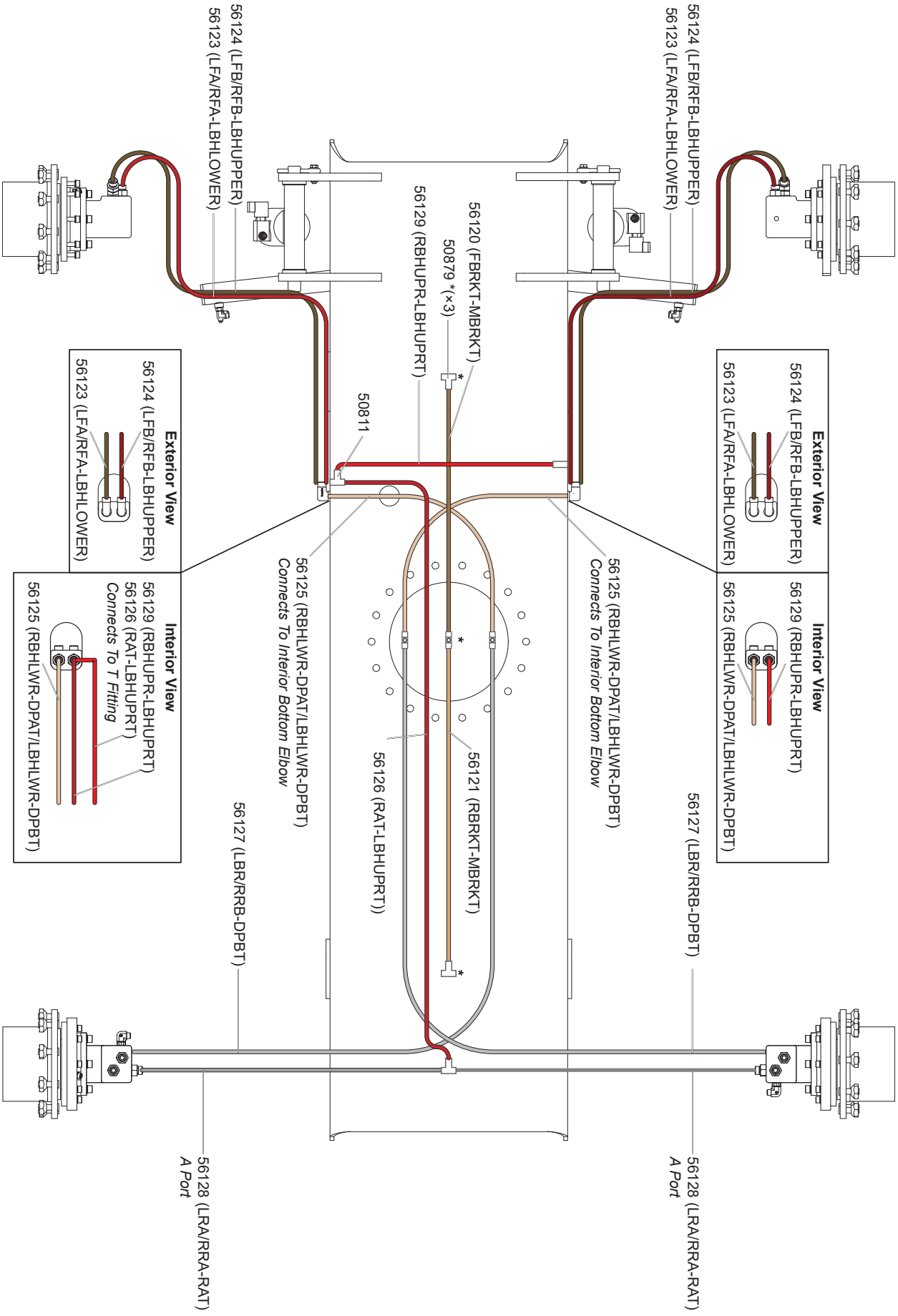

Part #	Description	Hose Name	Qty.
56120	FBRKT-MBRKT	Front Break Tee To Middle Break Tee	1
56121	RBRKT-MBRKT	Rear Break Tee To Middle Break Tee	1
56123	LFA/RFA-LBHLOWER	Left Front A / Right Front A To Left Bulk Head Lower	2
56124	LFB/RFB-LBHUPPER	Left Front B / Right Front B To Left Bulk Head Upper	2
56125	RBHLWR-DPAT/ LBHLWR-DPBT	Right Bulk Head Lower To Drive Pump A Tee / Left Bulk Head Lower To Drive Pump B Tee	2
56126	RAT-LBHUPRT	Rear Axle Tee To Left Bulk Head Upper Tee	1
56127	LBR/RRB-DPBT	Left Rear B / Right Rear B To Drive Pump B Tee	2
56128	LRA/RRA-RAT	Left Rear A / Right Rear A To Rear Axle Tee	2
56129	RBHUPR-LBHUPRT	Right Bulk Head Upper To Left Bulk Head Upper Tee	1

Chassis Hose Routing, Bottom View

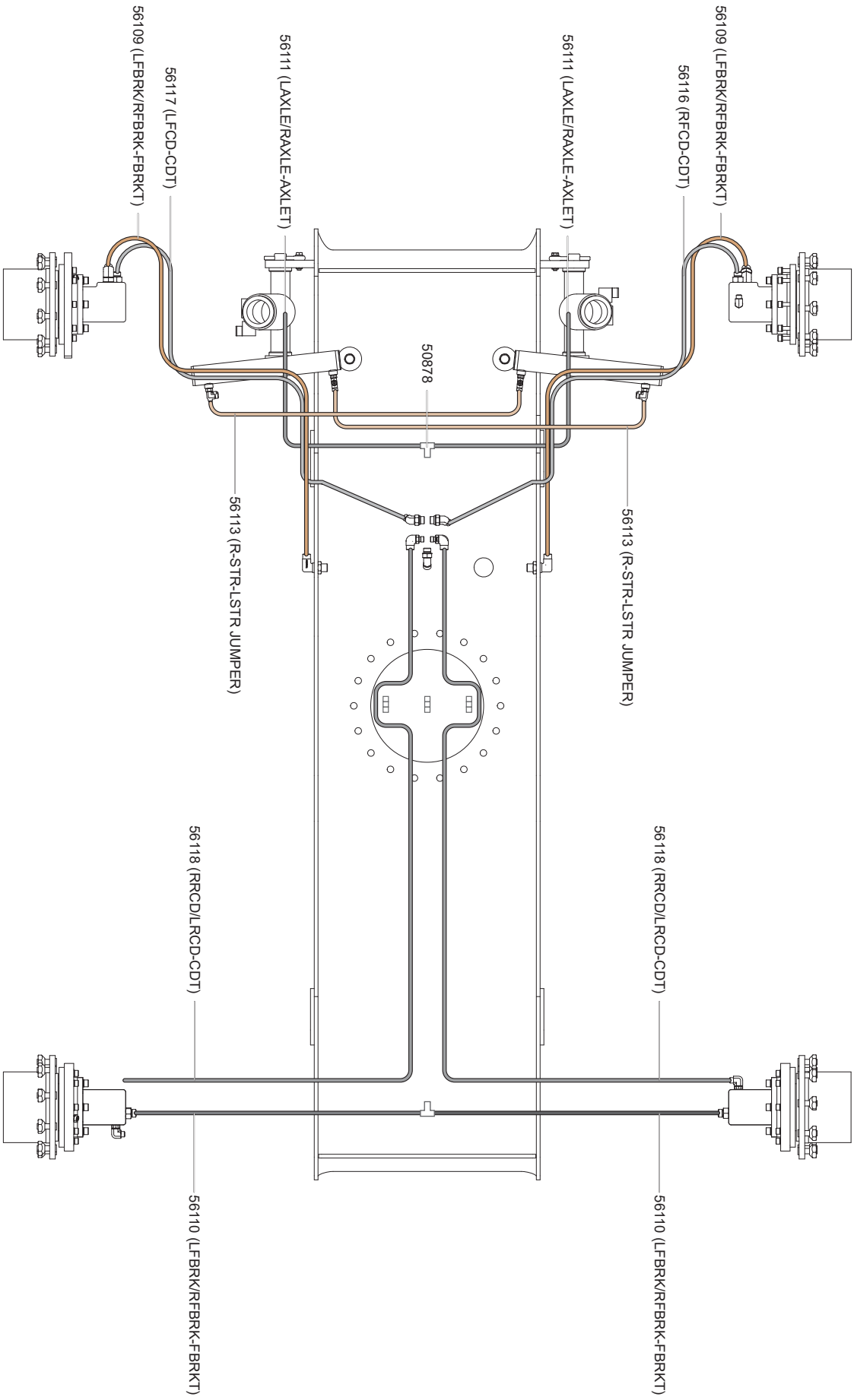

Part #	Description	Hose Name	Qty.
56109	LFBRK/RFBRK-FBRKT	Left Front Break / Right Front Break To Front Break Tee	2
56110	LFBRK/RFBRK-FBRKT	Left Front Break / Right Front Break To Front Break Tee	2
56111	LAXLE/RAXLE-AXLET	Left Axle / Right Axle To Axle Tee	2
56113	R-STR-LSTR JUMPER	Right Steer To Left Steer Jumper	2
56116	RFCD-CDT	Right Front Case Drain To Case Drain Tee	1
56117	LFCD-CDT	Left Front Case Drain To Case Drain Tee	1
56118	RRCD/LRCD-CDT	Right Rear Case Drain / Left Rear Case Drain To Case Drain Tee	2

Chassis to Turret Hose Routing, Side View

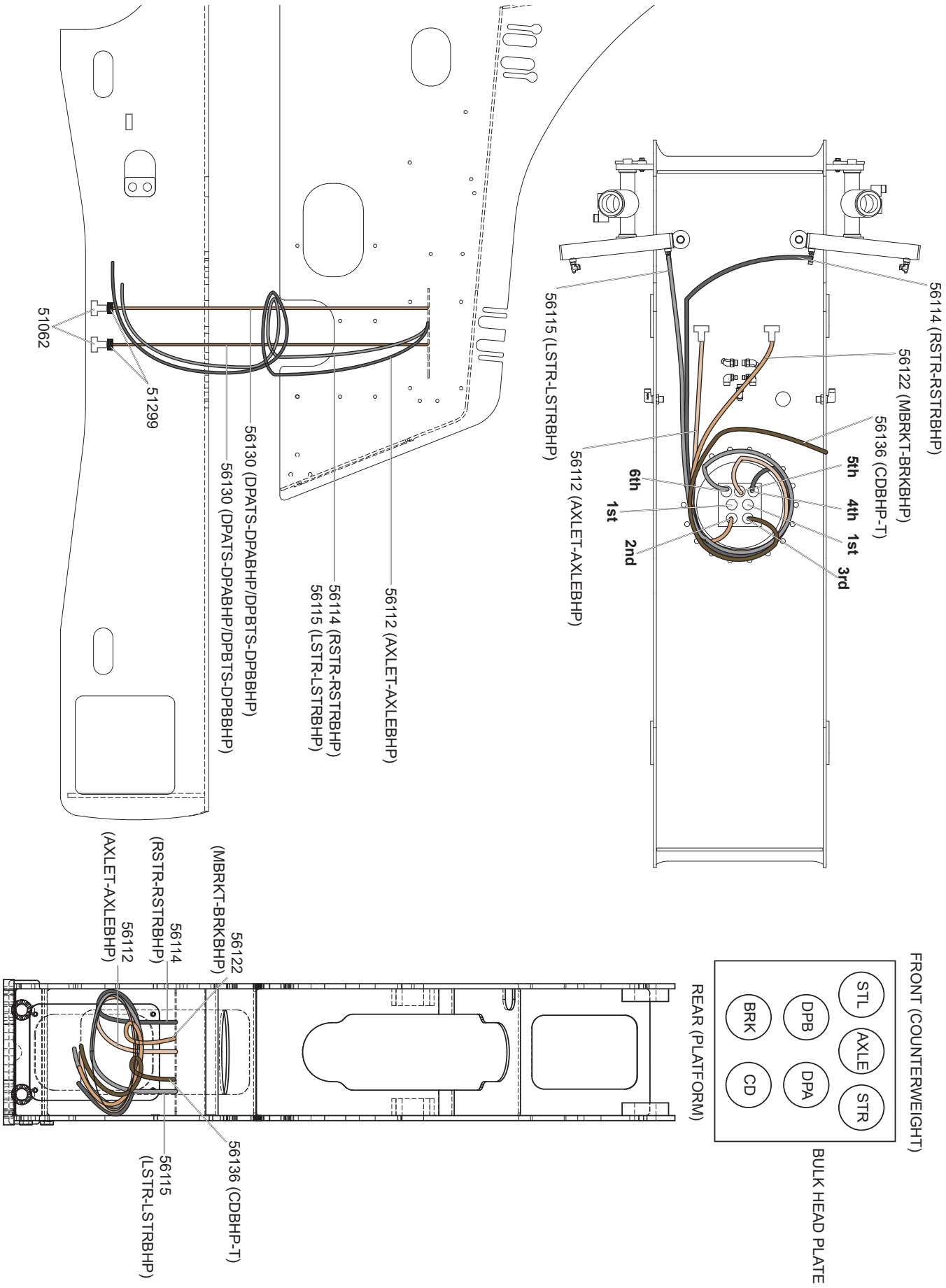

Part #	Description	Hose Name	Qty.
56112	AXLET-AXLEBHP	Axle Tee To Axle Bulk Head Plate	1
56114	RSTR-RSTRBHP	Right Steer To Right Steer Bulk Head Plate	1
56115	LSTR-LSTRBHP	Left Steer To Left Steer Bulk Head Plate	1
56122	MBRKT-BRKBHP	Middle Break Tee Tobreak Buld Head Plate	1
56130	DPATS-DPABHP/ DPBTS-DPBBHP	Drive Pump A Tee Short To Drive Pump A Bulk Head Plate	2
56136	CDBHP-T	Case Drain Bulk Head To Tank	1

Turret Hose Routing, Engine Side Only

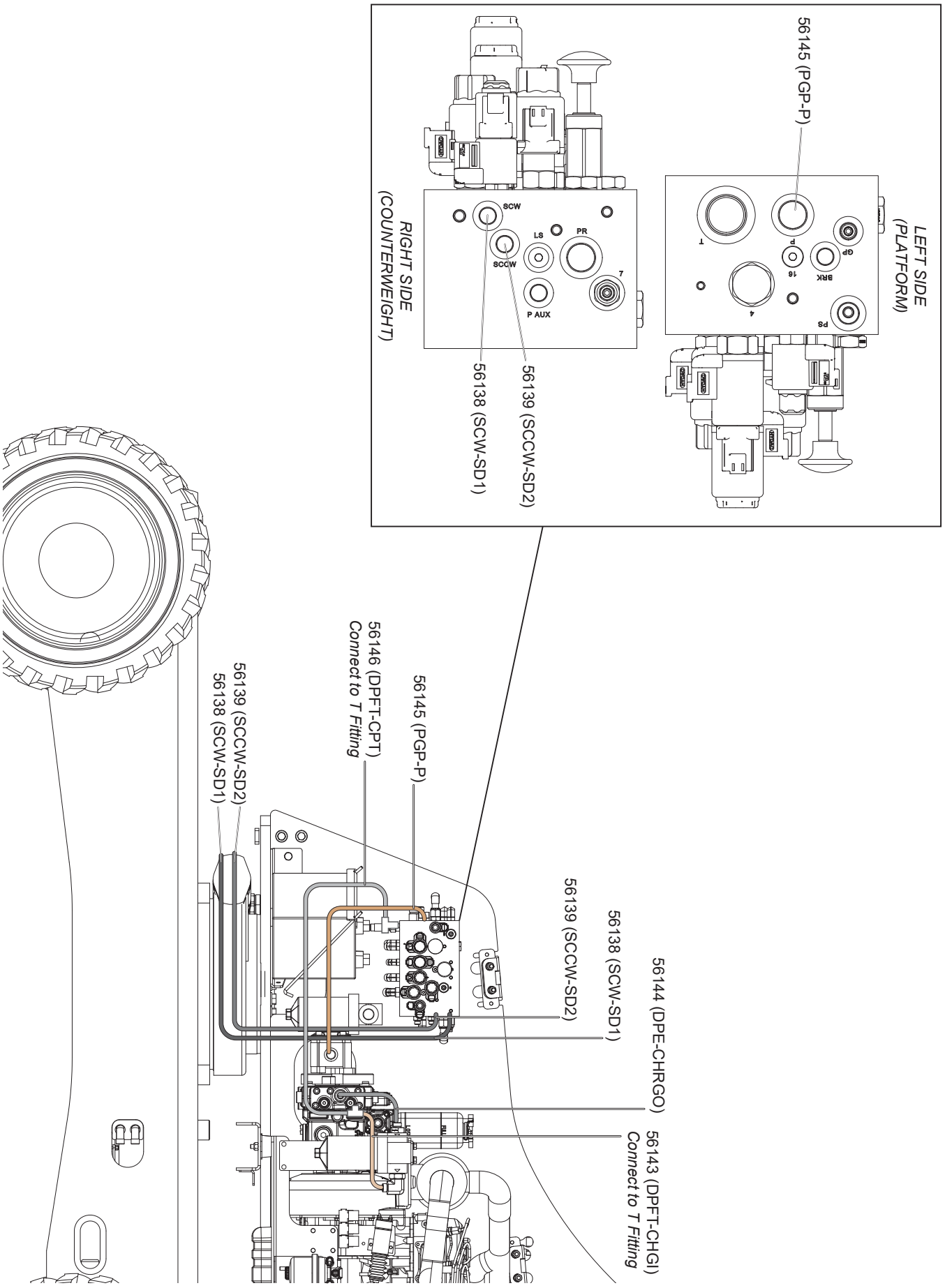

Part #	Description	Hose Name	Qty.
56138	SCW-SD1	SCW (On Manifold) To Slew Drive 1	1
56139	SCCW-SD2	SCCW (On Manifold) Wise To Slew Drive 2	1
56143	DPFT-CHGI	Drive Pump Front Tee To Charge Inlet	1
56144	DPE-CHRGO	Drive Pump E To Charge Outlet	1
56145	PGP-P	PGP (On Manifold) To Pump	1
56146	DPFT-CPT	Drive Pump Front Tee To Charge Pump Tee	1

Turret Hose Routing, Engine to Interior

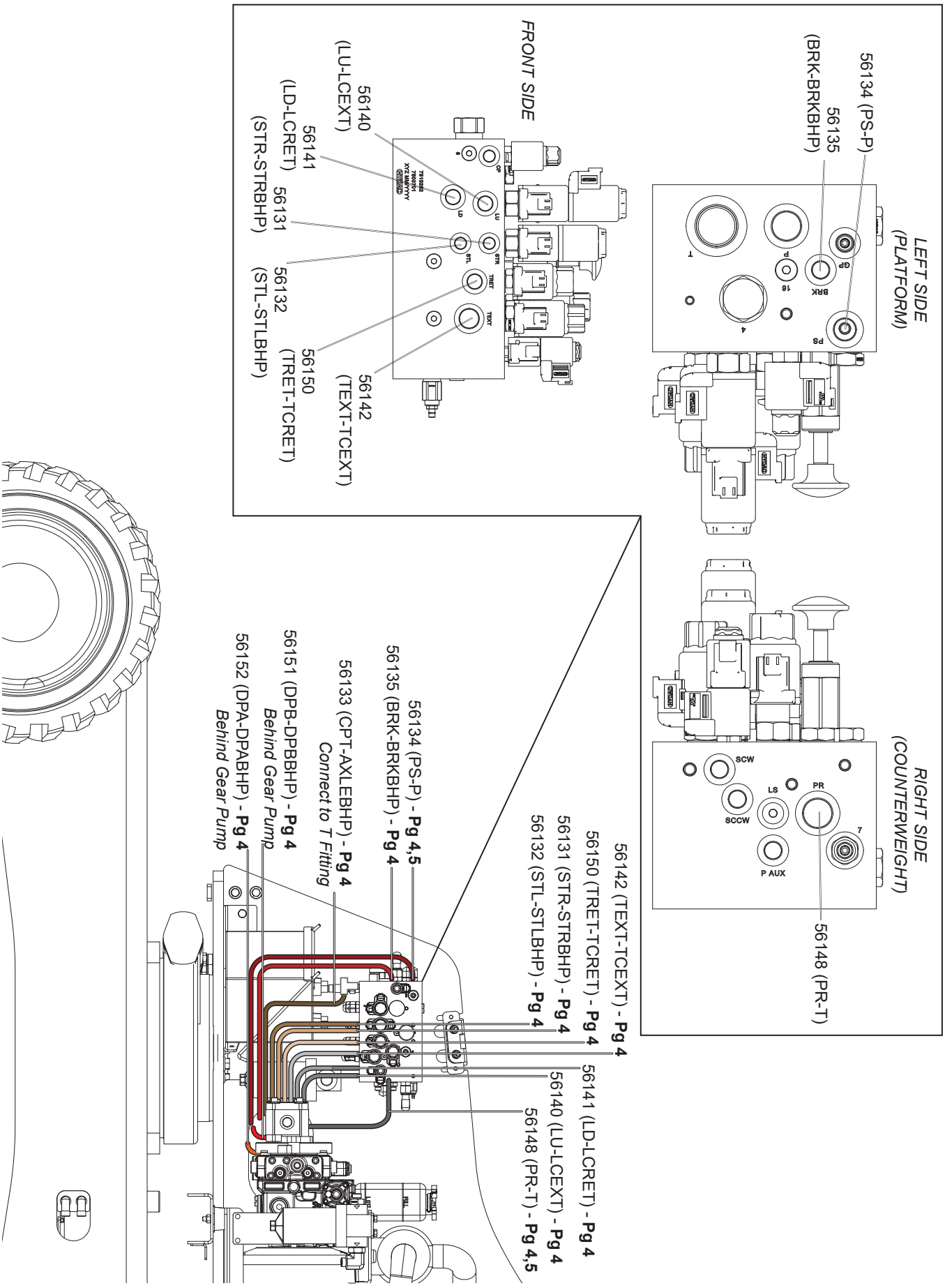

Part #	Description	Hose Name	Qty.
56131	STR-STRBHP	STR (On Manifold) To Steer Right Bulk Head Plate (Refer to Turret Hose Routing, Interior View on page 206)	1
56132	STL-STLBHP	STL (On Manifold) To Steer Right Bulk Head Plate (Refer to Turret Hose Routing, Interior View on page 206)	1
56133	CPT-AXLEBHP	CP (On Manifold) To Bulk Head Plate (Refer to Turret Hose Routing, Interior View on page 206)	1
56134	PS-P	PS (On Manifold) To Platform (Refer to Turret Hose Routing, Interior View on page 206) (Refer to Turret Hose Routing, Control Side on page 208)	1
56135	BRK-BRKBHP	BRK (On Manifold) To BRK Bulk Head Plate (Refer to Turret Hose Routing, Interior View on page 206)	1
56140	LU-LCEXT	LU (On Manifold) To Lower Cylinder Extend (Refer to Turret Hose Routing, Interior View on page 206)	1
56141	LD-LCRET	LD (On Manifold) To Lower Cylinder Retract (Refer to Turret Hose Routing, Interior View on page 206)	1
56142	TEXT-TCEXT	TEXY (On Manifold) To Tele-Cylinder Extend (Refer to Turret Hose Routing, Interior View on page 206)	1
56148	PR-T	PR (On Manifold) To Tank (Refer to Turret Hose Routing, Interior View on page 206) (Refer to Turret Hose Routing, Control Side on page 208)	1
56150	TRET-TCRET	TRET (On Manifold) To Tele-Cylinder Retract (Refer to Turret Hose Routing, Interior View on page 206)	1
56151	DPB-DPBBHP	Drive Pump B To Drive Pump B Bulk Head Plate (Refer to Turret Hose Routing, Interior View on page 206)	1
56152	DPA-DPABHP	Drive Pump A To Drive Pump A Bulk Head Plate (Refer to Turret Hose Routing, Interior View on page 206)	1

Turret Hose Routing, Engine to Controls

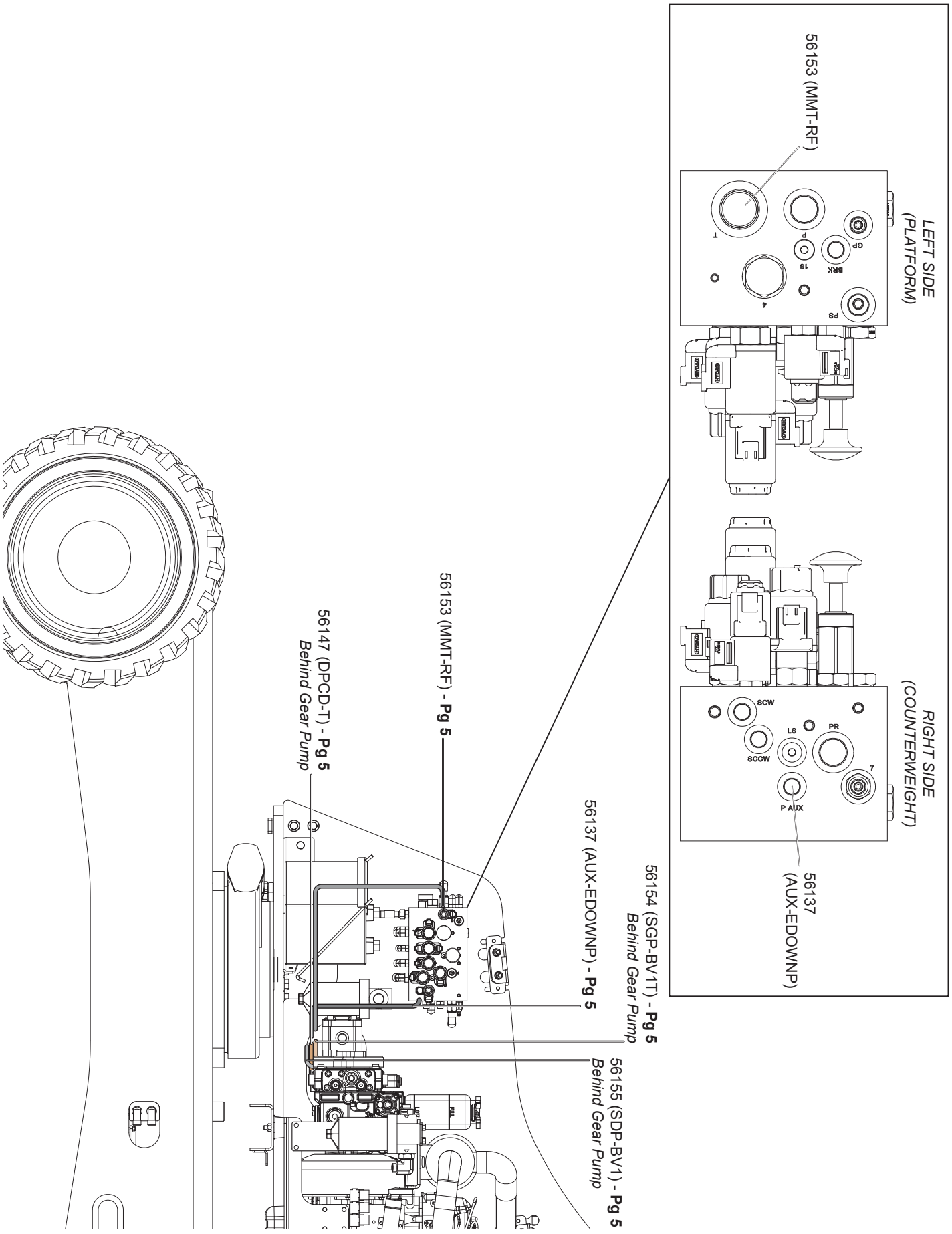

Part #	Description	Hose Name	Qty.
56137	AUX-EDOWNP	AUX (On Manifold) To E Down Pump (Refer to Turret Hose Routing, Control Side on page 208)	1
56147	DPCD-T	Drive Pump Case Drain To Tank (Refer to Turret Hose Routing, Control Side on page 208)	1
56153	MMT-RF	T (On Manifold) To Return Filter (Refer to Turret Hose Routing, Control Side on page 208)	1
56154	SGP-BV1T	Suction Gear Pump To Ball Valve 1 Tee (Refer to Turret Hose Routing, Control Side on page 208)	1
56155	SDP-BV1	Rear Axle Tee To Left Bulk Head Upper Tee (Refer to Turret Hose Routing, Control Side on page 208)	1

Turret Hose Routing, Interior View

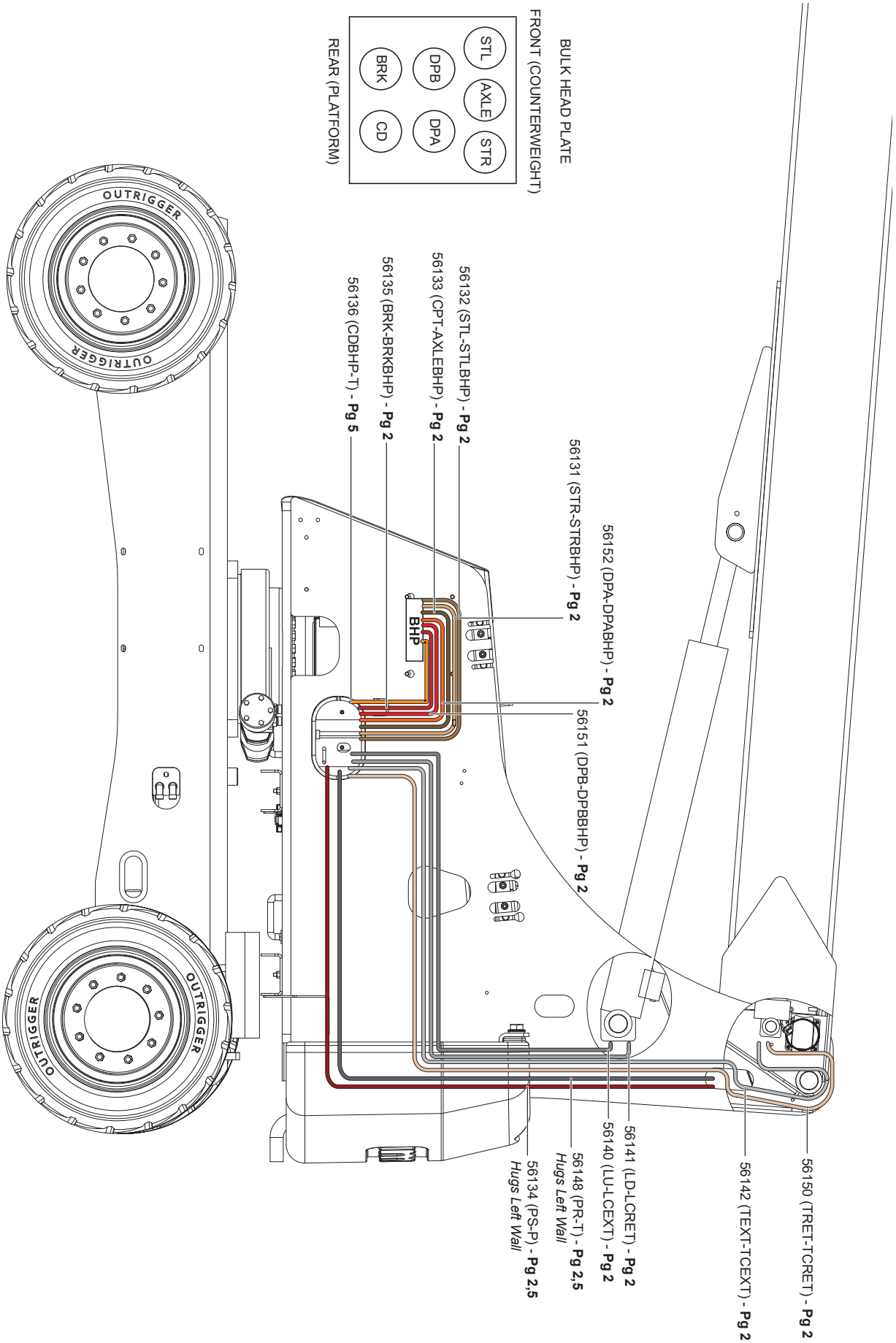

Part #	Description	Hose Name	Qty.
56131	STR-STRBHP	STR (On Manifold) To Steer Right Bulk Head Plate (Refer to Turret Hose Routing, Engine to Interior on page 202)	1
56132	STL-STLBHP	STL (On Manifold) To Steer Right Bulk Head Plate (Refer to Turret Hose Routing, Engine to Interior on page 202)	1
56133	CPT-AXLEBHP	CP (On Manifold) To Bulk Head Plate (Refer to Turret Hose Routing, Engine to Interior on page 202)	1
56134	PS-P	PS (On Manifold) To Platform (Refer to Turret Hose Routing, Engine to Interior on page 202) (Refer to Turret Hose Routing, Control Side on page 208)	1
56135	BRK-BRKBHP	BRK (On Manifold) To BRK Bulk Head Plate (Refer to Turret Hose Routing, Engine to Interior on page 202)	1
56136	CDBHP-T	Case Drain Bulk Head To Tank (Refer to Turret Hose Routing, Control Side on page 208)	1
56140	LU-LCEXT	LU (On Manifold) To Lower Cylinder Extend (Refer to Turret Hose Routing, Engine to Interior on page 202)	1
56141	LD-LCRET	LD (On Manifold) To Lower Cylinder Retract (Refer to Turret Hose Routing, Engine to Interior on page 202)	1
56142	TEXT-TCEXT	TEXY (On Manifold) To Tele-Cylinder Extend (Refer to Turret Hose Routing, Engine to Interior on page 202)	1
56148	PR-T	PR (On Manifold) To Tank (Refer to Turret Hose Routing, Engine to Interior on page 202) (Refer to Turret Hose Routing, Control Side on page 208)	1
56150	TRET-TCRET	TRET (On Manifold) To Tele-Cylinder Retract (Refer to Turret Hose Routing, Engine to Interior on page 202)	1
56151	DPB-DPBBHP	Drive Pump B To Drive Pump B Bulk Head Plate (Refer to Turret Hose Routing, Engine to Interior on page 202)	1
56152	DPA-DPABHP	Drive Pump A To Drive Pump A Bulk Head Plate (Refer to Turret Hose Routing, Engine to Interior on page 202)	1

Turret Hose Routing, Control Side

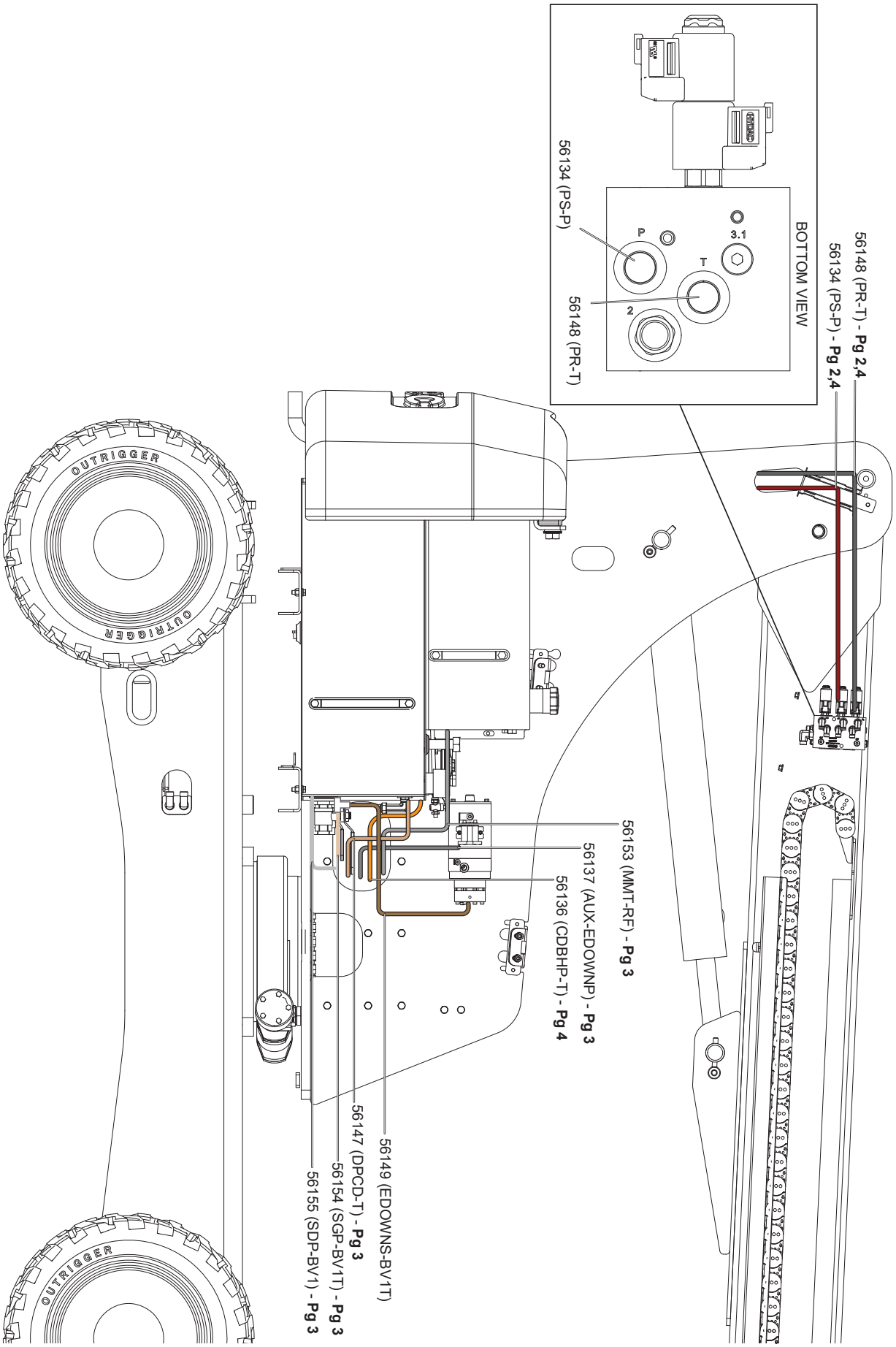

Part #	Description	Hose Name	Qty.
56134	PS-P	PS (On Manifold) To Platform (Refer to Turret Hose Routing, Engine to Interior on page 202) (Refer to Turret Hose Routing, Interior View on page 206)	1
56136	CDBHP-T	Case Drain Bulk Head To Tank (Refer to Turret Hose Routing, Interior View on page 206)	1
56137	AUX-EDOWNP	AUX (On Manifold) To E Down Pump (Refer to Turret Hose Routing, Engine to Controls on page 204)	1
56147	DPCD-T	Drive Pump Case Drain To Tank (Refer to Turret Hose Routing, Engine to Controls on page 204)	1
56148	PR-T	PR (On Manifold) To Tank (Refer to Turret Hose Routing, Engine to Interior on page 202) (Refer to Turret Hose Routing, Interior View on page 206)	1
56149	EDOWNS-BV1T	E Down To Ball Valve 1 Tee	1
56153	MMT-RF	T (On Manifold) To Return Filter (Refer to Turret Hose Routing, Engine to Controls on page 204)	1
56154	SGP-BV1T	Suction Gear Pump To Ball Valve 1 Tee (Refer to Turret Hose Routing, Engine to Controls on page 204)	1
56155	SDP-BV1	Suction Drive Pump To Ball Valve 1 (Refer to Turret Hose Routing, Engine to Controls on page 204)	1

Chassis Assembly, Part 1

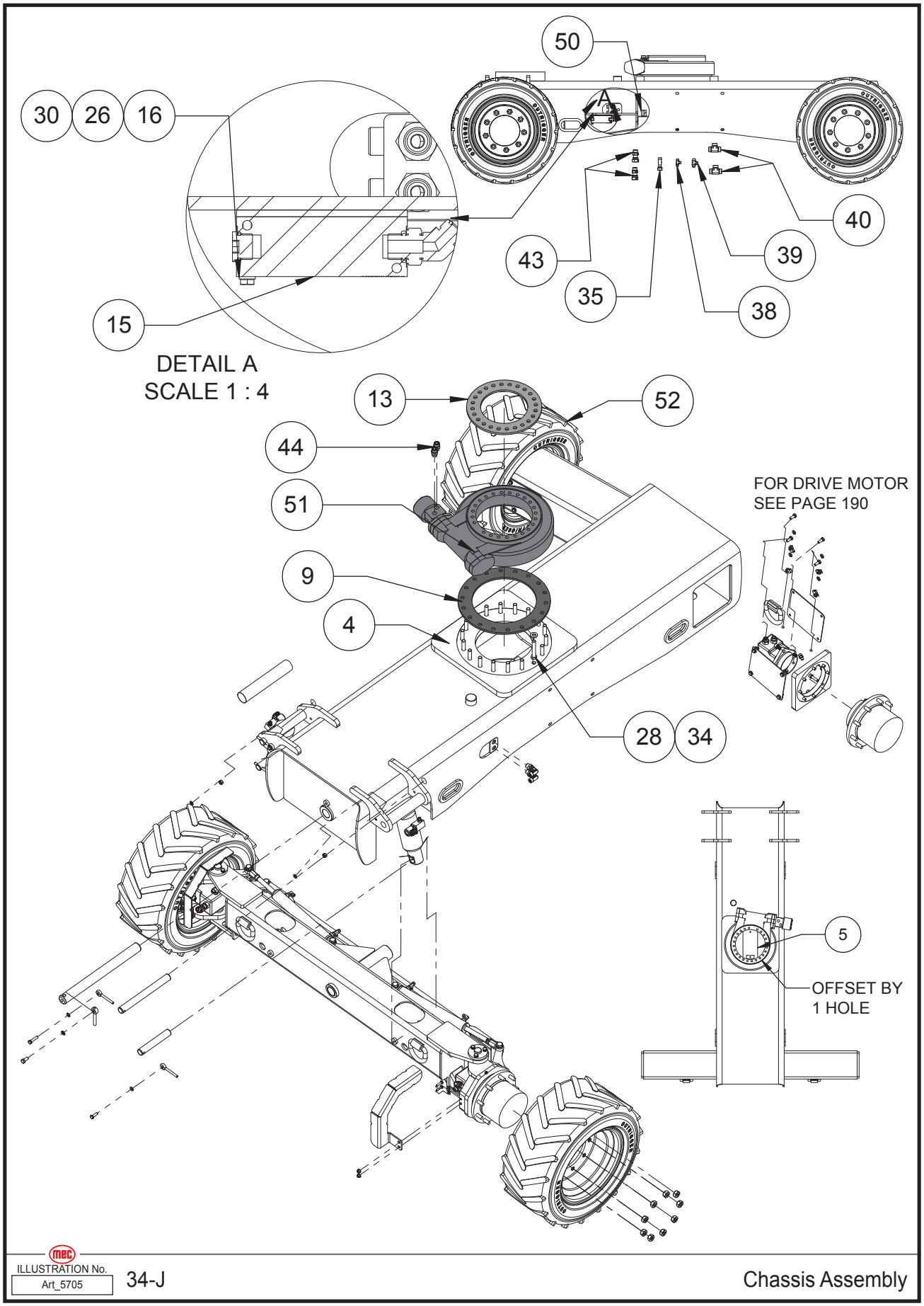

ILLUSTRATION No. Art_5705 34-J Chassis Assembly

Item	Part Number	Description	Qty.
4	32000	Frame Weldment	1
5	32035	Plate, Chassis Live	1
9	32044	Spacer, Swing Bearing	1
13	32059	Plate, Swing Bearing	1
15	32255	Assembly, Manifold Case Drain (Refer to page 162)	1
16	50000	WSHR M06 ZP Standard Flat	4
26	50048	NNYL M08X1.25 08 ZP Nylon	4
28	50259	M16- 2.0X100 GD 10.9	18
30	50365	NLUG 09/16-18 08 ZP Hex Lug Nut	36
34	50582	WSHR 05/08 X 1-5/16 X 1/8, SAE, 08, ZP	18
35	50811	HYFT MFFOR-FFORX-MFFOR-8 ; FS6602-08-08-08	1
38	50878	HYFT MFFORT-4 ; FS2603-04-04-04	1
39	50879	HYFT MFFORT-6 ; FS2603-06-06-06	3
40	51062	MFFORT-12	2
43	51299	HYFT MFFOR-FFFORSS 12-12	2
44	51311	HYFT MFFOR-MB-8-10 ; FS6400-8-10-O	2
50	95030	Clamp Body, Twin Series 7/8 Hose	2
51	95178	Swing Bearing, w/ Drive	1
--	95709	Motor, Swing Bearing	1
52	95221	RH Solid Tire	2

Chassis Assembly, Part 2

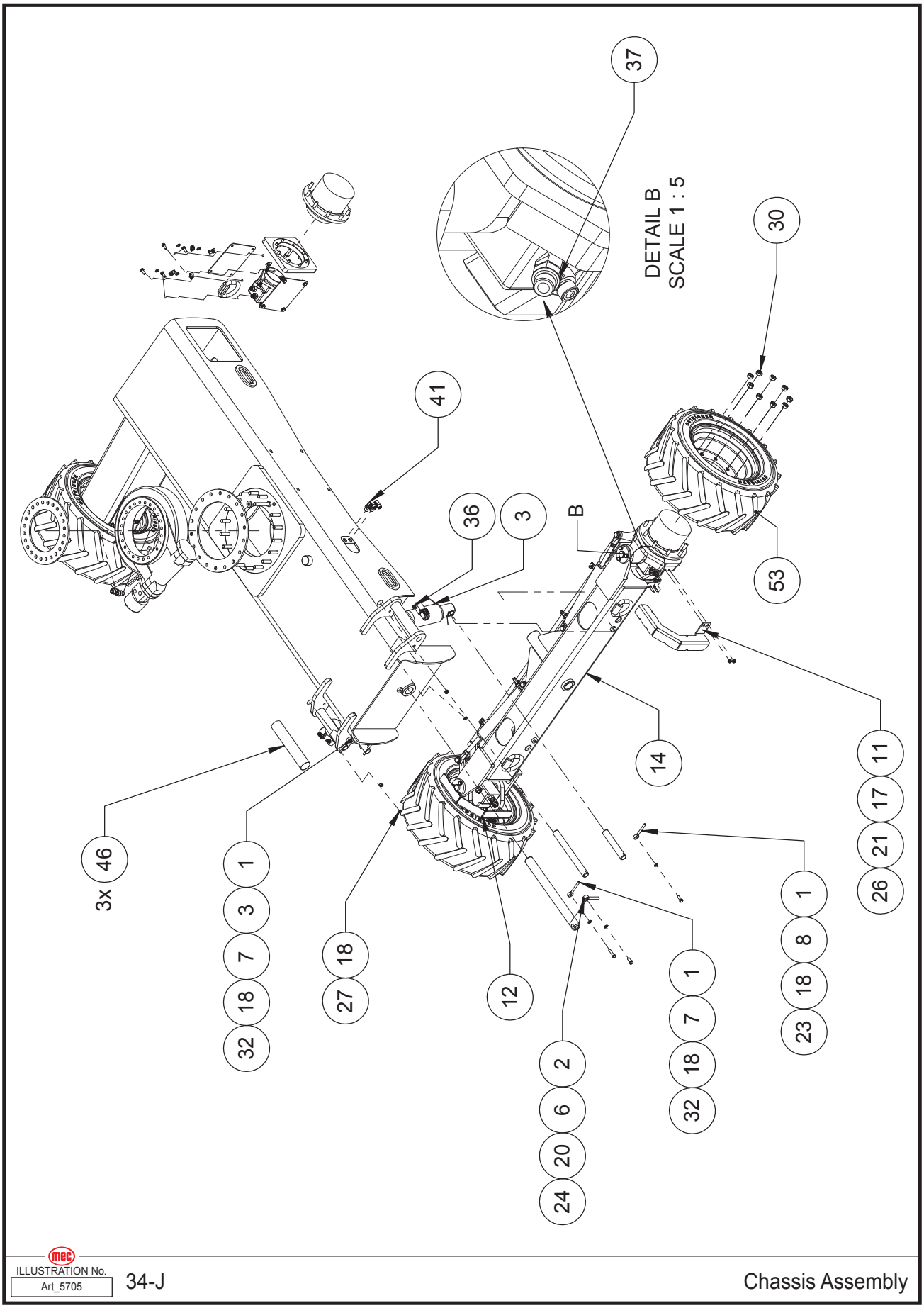

ILLUSTRATION No. Art_5705 34-J Chassis Assembly

Item	Part Number	Description	Qty.
1	18151	Keeper Pin	4
2	18152	1/2" Pin Retainer	1
3	19087M	Cylinder, Axle	2
6	32039	Pin, 44.40mm X 500mm LG	1
7	32040	Pin, Axle Lock Cylinder	2
8	32041	PIN, Ø38.1mm X 250mm LG	2
11	32054	Hose Guard	1
12	32055	Hose Guard	1
14	32100	Front Axle, Assembly (Refer to page 156)	1
17	50001	WSHR M08 ZP Standard Flat	8
18	50002	WSHR M10 ZP Standard Flat	22
20	50007	WSHR M12 ZP Nordlock	9
21	50032	HHCS M8-1.25 x 30 ZP	4
23	50034	HHCS M10-1.50X030 08 ZP F	2
24	50038	HHCS M12-1.75X025 08 ZP F	1
26	50048	NNYL M08X1.25 08 ZP Nylon	4
27	50049	NNYL M10X1.50 08 ZP Nylon Inse	2
30	50365	NLUG 09/16-18 08 ZP Hex Lug Nut	36
32	50430	HHCS M10-1.50X045 08 ZP	2
36	50831	HYFT MFFOR-MB-4-4	4
37	50837	HYFT MFFOR-MB-8-10	4
41	51092	HYFT MFFOR-MFFORH90-08 Bulkhead Adapter	4
46	93234	Nylon Protective Sleeve Material 5.4 FT.	3
53	95223	LH Solid Tire	2

Chassis Assembly, Part 3

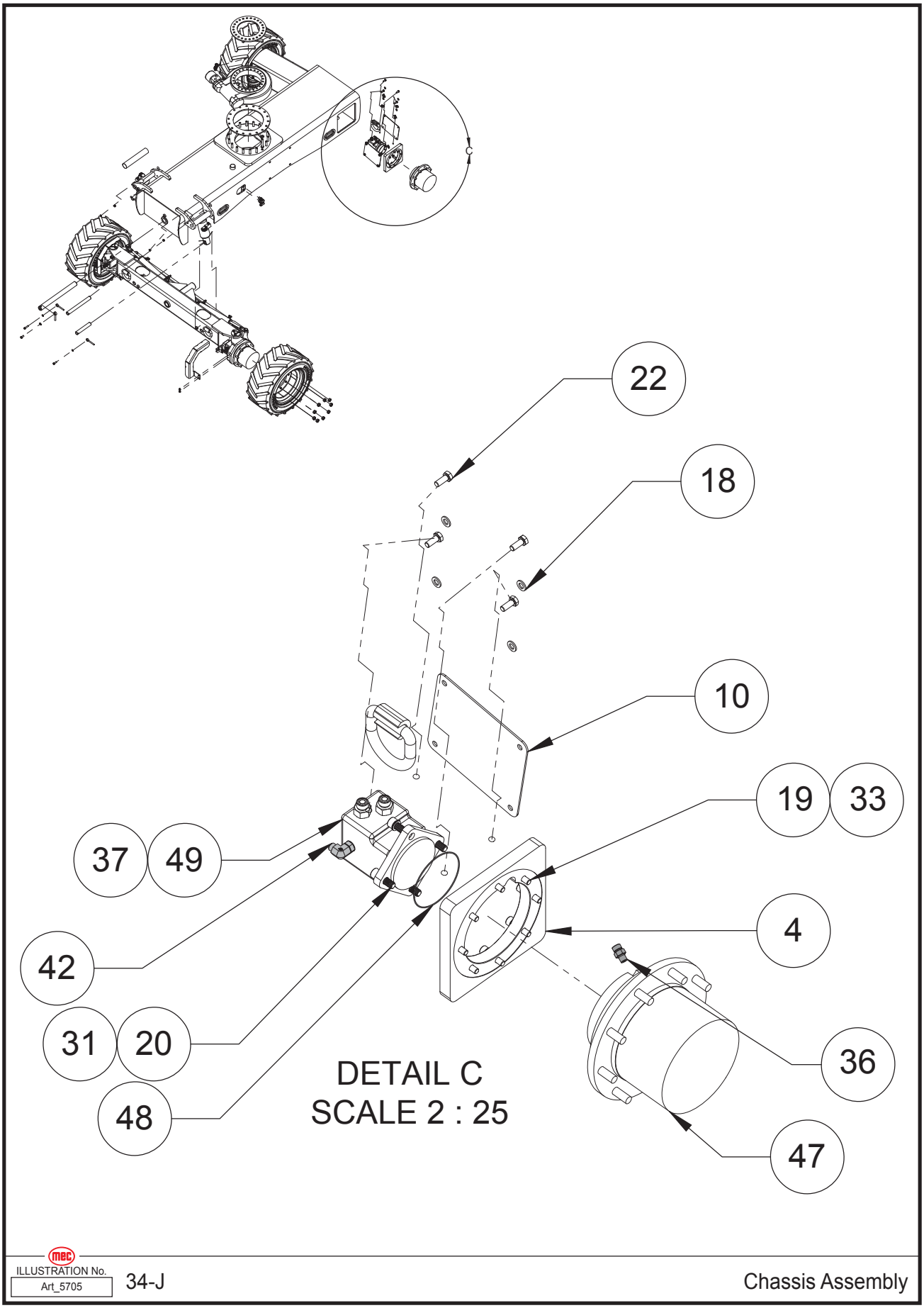

ILLUSTRATION No. Art_5705 34-J Chassis Assembly

Item	Part Number	Description	Qty.
4	32000	Frame Weldment	1
10	32051	Plate, Cover	4
18	50002	WSHR M10 ZP Standard Flat	22
19	50006	WSHR M10 ZP Nordlock	16
20	50007	WSHR M12 ZP Nordlock	9
22	50033	HHCS M10-1.50X025 08 ZP F	16
31	50425	SHCS M12-1.5 X 35MM Long 08	8
33	50440	SHCS M10-1.50X040 12 ZP F	16
36	50831	HYFT MFFOR-MB-4-4	4
37	50837	HYFT MFFOR-MB-8-10	4
42	51298	HYFT MB-MFFOR90 4-6	2
47	93710	Drive Hub, Omni-Gear	4
	97101	Drive Hub, JI HYD	4
48	94756	O-Ring	2
49	94863	160CC HYD Motor Side Ports	2

Engine Hood Assembly

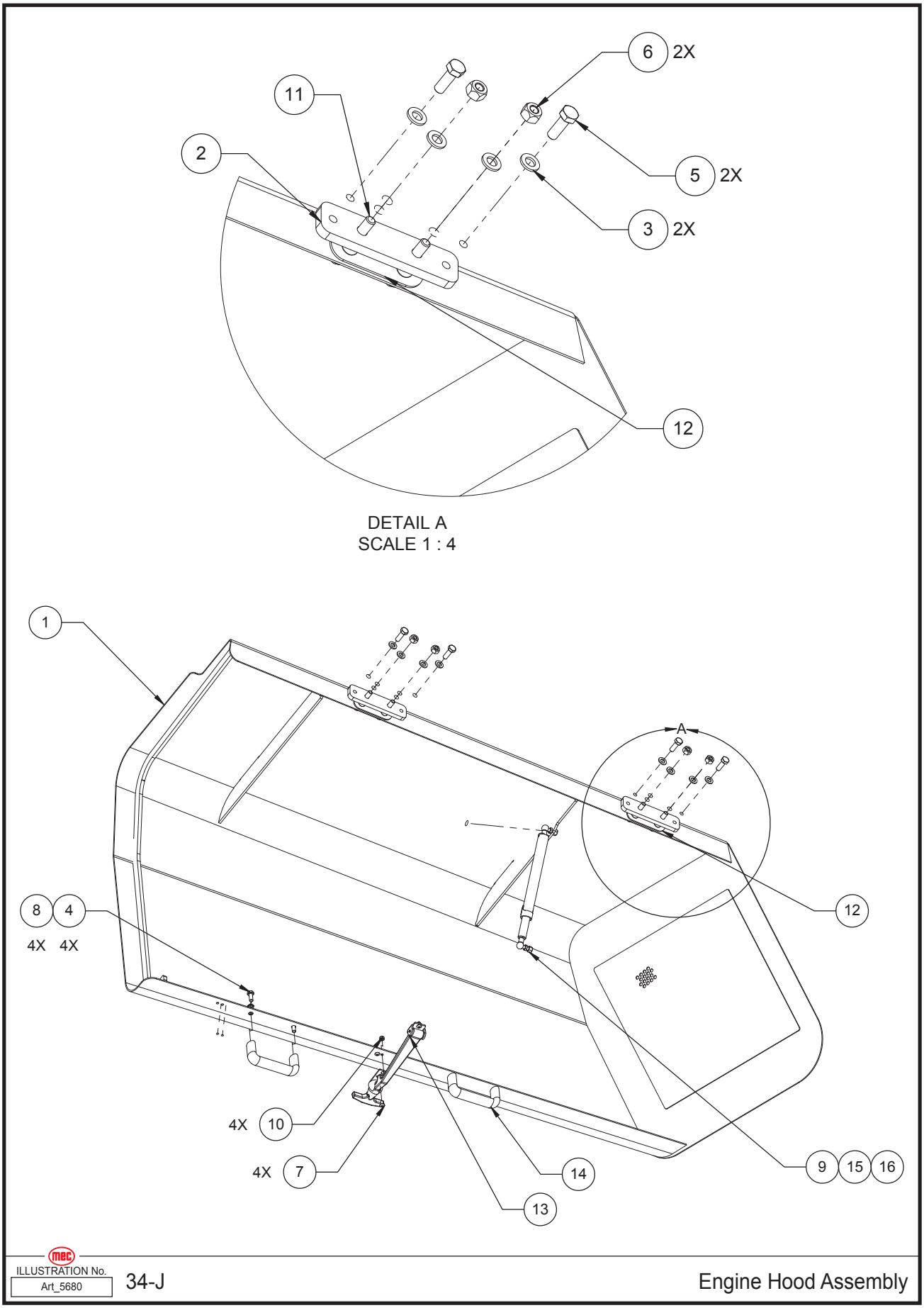

Item	Part Number	Description	Qty.
1	32130	Weldment, Hood, Engine, Micro Boom	1
2	32247	Hinge Mount	2
3	50002	WSHR M10 ZP Standard Flat	12
4	50030	HHCS M8-1.25 X 20 GR 8.8 ZP	4
5	50034	HHCS M10-1.50X030 08 ZP F	4
6	50049	NNYL M10X1.50 08 ZP Nylon Inse	8
7	50191	THMS #10-32X00.50 ZP	4
8	50200	M08 NORDLOCK Washer	4
9	50203	NNYL 5/16-18, 05, ZP	2
10	50238	NNYL #10-32 05 Z	4
11	50370	BHCS M10-1.5X030 08 ZP P	8
12	93733	Hinge Half	2
13	93817	Flexible Molded Latch	1
14	93821	Pull Handle	2
15	94065	Ball Stud, 13mm Ball, 5/16 X 1/2 Thread	2
16	95227	Gas Spring, EXT 508mm, RET 305mm, 200 LB, Locking	1

Engine Side, Hood Stop Assembly

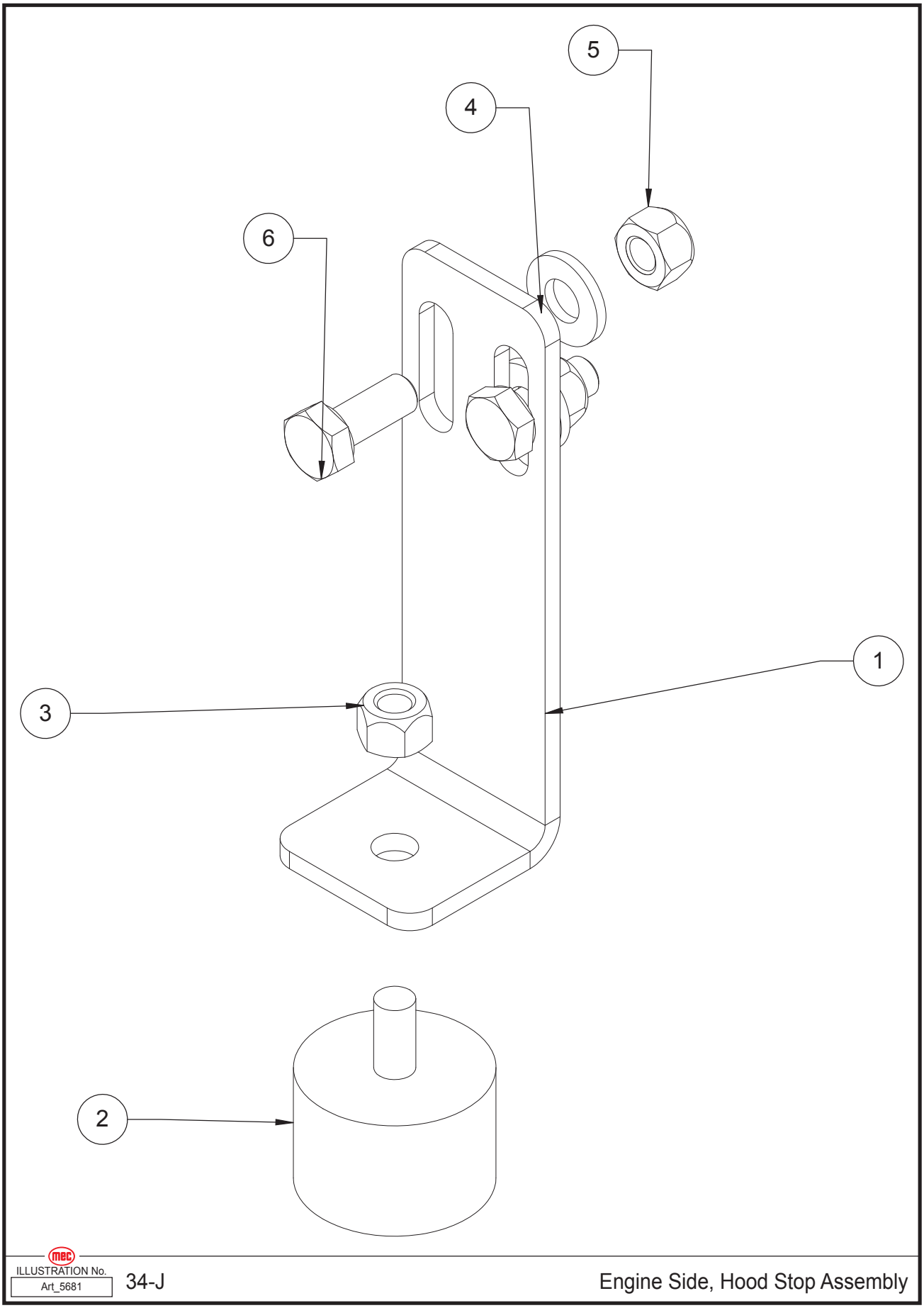

ILLUSTRATION No. Art_5681 34-J Engine Side, Hood Stop Assembly

Item	Part Number	Description	Qty.
1	32103	Hood Stop Bracket	1
2	93845	Load Rated Bumper With Threaded Stud	1
3	50203	NNYL 5/16-18, 05, ZP	1
4	50001	WSHR M08 ZP Standard Flat	2
5	50048	NNYL M08X1.25 08 ZP Nylon	2
6	50030	HHCS M8-1.25 X 20 GR 8.8 ZP	2

Control Hood Assembly

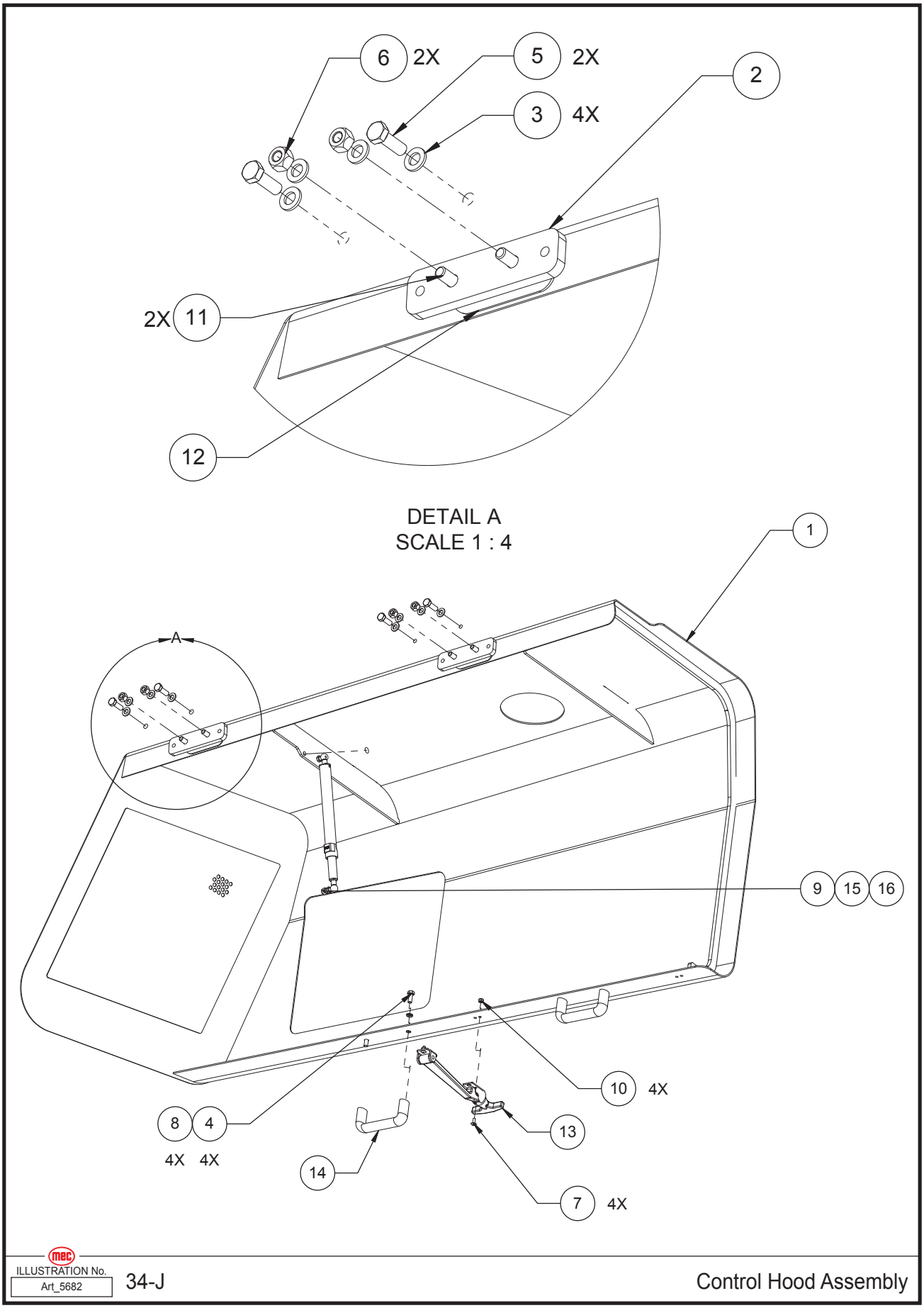

ILLUSTRATION No. Art_5682 34-J Control Hood Assembly

Item	Part Number	Description	Qty.
--	32106	Control Hood Assembly	--
1	32107	Hood Weldment, Controls, Micro Boom	1
2	32247	Hinge Mount	2
3	50002	WSHR M10 ZP Standard Flat	10
4	50030	HHCS M8-1.25 X 20 GR 8.8 ZP	4
5	50034	HHCS M10-1.50X030 08 ZP F	4
6	50049	NNYL M10X1.50 08 ZP Nylon Inse	6
7	50191	THMS #10-32X00.50 ZP	4
8	50200	M08 NORDLOCK Washer	4
9	50203	NNYL 5/16-18, 05, ZP	2
10	50238	NNYL #10-32 05 Z	4
11	50370	BHCS M10-1.5X030 08 ZP P	8
12	93733	Hinge Half	2
13	93817	Flexible Molded Latch	1
14	93821	Load Rated Pull Handle, 4-7/16” Center To Center, Aluminum	2
15	94065	Ball Stud, 13mm Ball, 5/16 X 1/2 Thread	2
16	95227	Gas Spring, EXT 508mm, RET 305mm, 200 LB, Locking	1

Control Side, Hood Stop Assembly

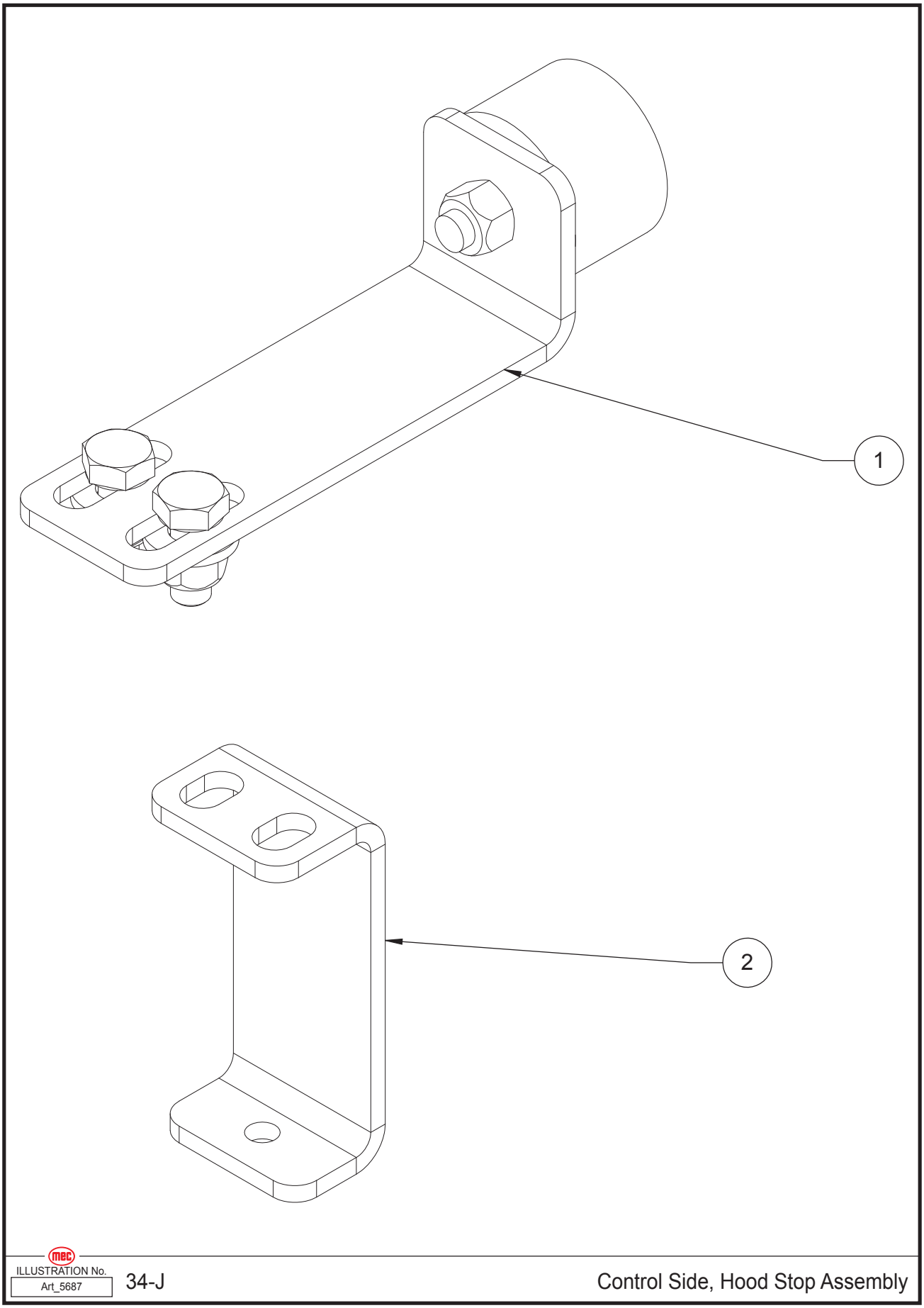

ILLUSTRATION No. Art_5687 34-J Control Side, Hood Stop Assembly

Item	Part Number	Description	Qty.
--	32249	Control Side, Hood Stop Assembly	--
1	--	Hood Stop Assembly (Refer to page 218)	1
2	32248	Bracket, Hood Stop	1

D1105 Engine Kit

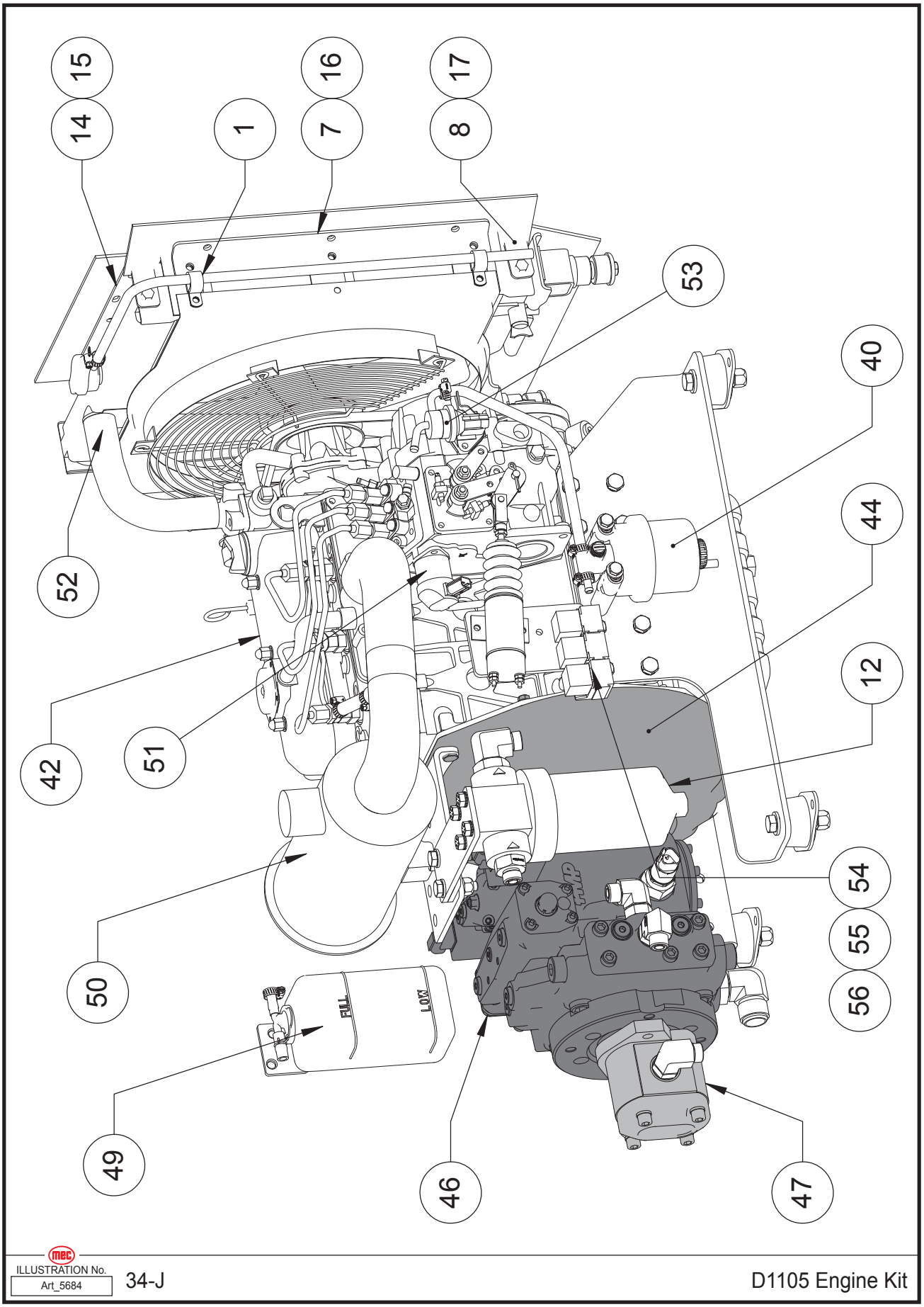

ILLUSTRATION No. Art_5684 34-J D1105 Engine Kit

Item	Part Number	Description	Qty.
1	5882	P-Clamp W/VNL 5/8 ID X .50 Wide	2
7	27265	Rubber Flap Side Mount	1
8	27266	Top Airflow	1
12	32258	Assembly, Charge Filter (Refer to page 174)	1
14	32319	Top Separator Bracket	1
15	32320	Top Separator, Radiator Hot Air	1
16	32321	Side Separator, Radiator Hot Air	1
17	32322	Bottom Separator, Radiator Hot Air	1
40	91116	Fuel Filter Assembly, Stanadyne	1
	91123	Fuel Filter Element, Stanadyne	1
	96387	Fuel Filter Assembly, Black	1
	96388	Fuel Filter Element, Black	1
42	91429	Engine Kit, D1105	1
44	93470	D1105 SAE B-B Coupler (15T Spline)	1
--	95710	Coupling for 93470	1
46	95235	35CC Closed Loop Pump	1
47	95365	Rexroth Pump, 10CC	1
49	91127	Engine Coolant Reservoir	1
50	91111	Air Cleaner Filter Kit	1
--	8667	Filter Element	1
51	91124	Fuel Solenoid	1
52	94237	Hose, Radiator Upper	1
53	93619	Fuel Pump	1
54	91375	Relay, 12V	3
55	92103	Base Relay	3
56	92104	Terminal Relay	12

D1105 Engine Kit, Part 2

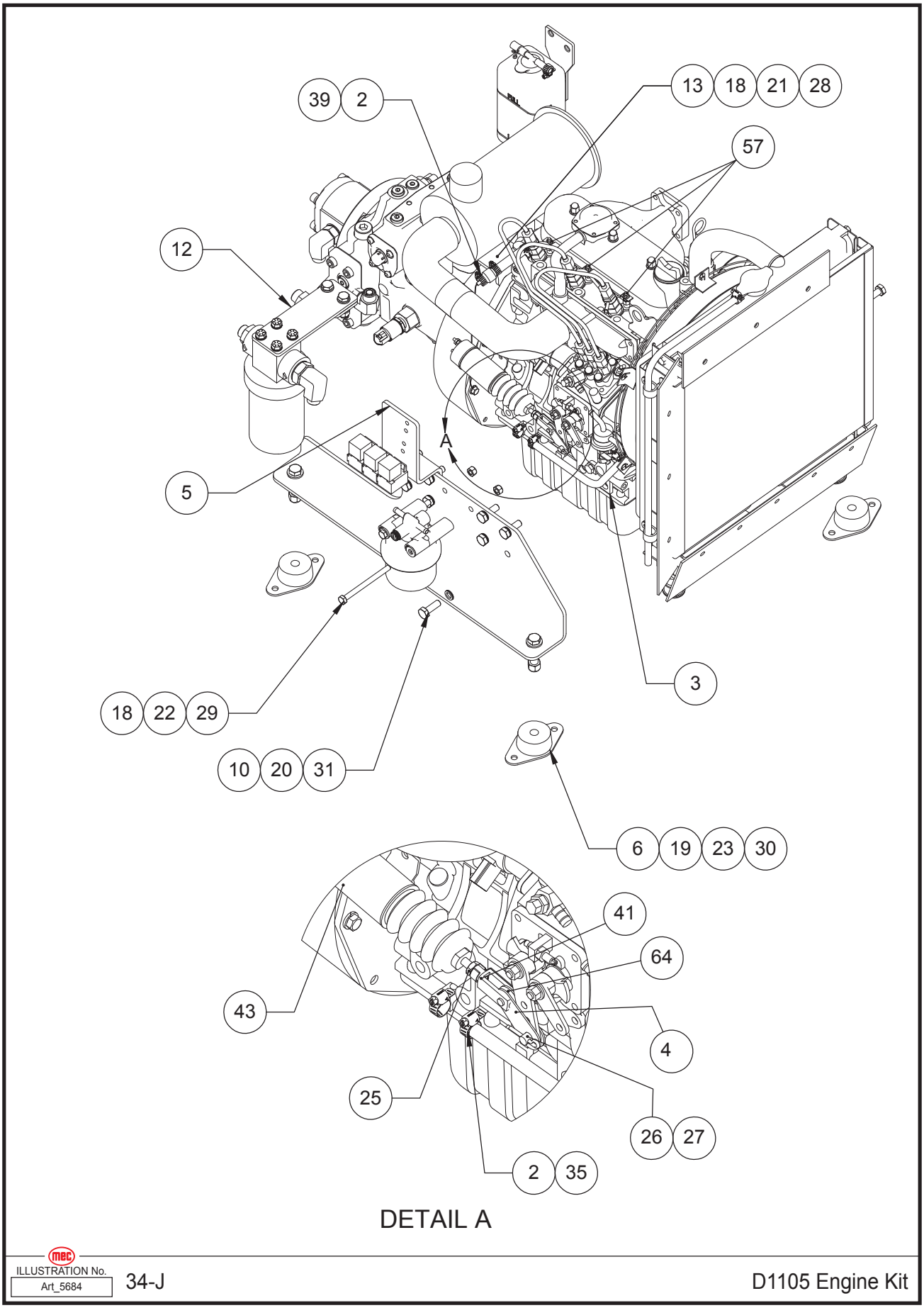

ILLUSTRATION No. Art_5684 34-J D1105 Engine Kit

Item	Part Number	Description	Qty.
--	32200	D1105 Engine Kit	--
2	7788	SAE 4 Hose Clamp	8
3	16210	Spacer, Engine	1
4	16347	Throttle Link	2
5	17854	Dual Solenoid Bracket	1
6	17969	Motor Mount, Engine, 70 DR.	4
10	32070	Engine Mount, RH	1
12	32258	Assembly, Charge Filter (Refer to page 174)	1
13	32259	Bracket, Engine Air Intake	1
18	50001	WSHR M08 ZP Standard Flat	4
19	50003	WSHR M12 ZP Standard Flat	4
20	50006	WSHR M10 ZP Nordlock	16
21	50030	HHCS M8-1.25 X 20 GR 8.8 ZP	2
22	50048	NNYL M08X1.25 08 ZP Nylon	2
23	50050	NNYL M12X1.75 08 ZP Nylon Inse	4
25	50164	Hex Jam Nut Pin, NJAM 01/04-28 05 ZP	1
26	50171	PCLV 0.310X0.50 ZP STL	1
27	50178	Cotter Pin, 1/8" X 1.00"	1
28	50200	M08 NORDLOCK Washer	2
29	50237	HHCS M08-1.25X100 08 ZP P	2
30	50265	HHCS M12-1.75X060 08 ZP P	4
31	50392	HHCS M10-1.25X30 08 ZP	8
35	50959	5/16" Hose	212"
39	91114	Check Valve, Fuel Return	1
41	91117	Clevis, Throttle Linkage	1
43	91589	Throttle Solenoid Diesel Engine; Trombetta	1
57	9832	Glow Plug	3
64	91588	WRFLAT 0.2500.7500	1

D1105 Engine Kit, Part 3

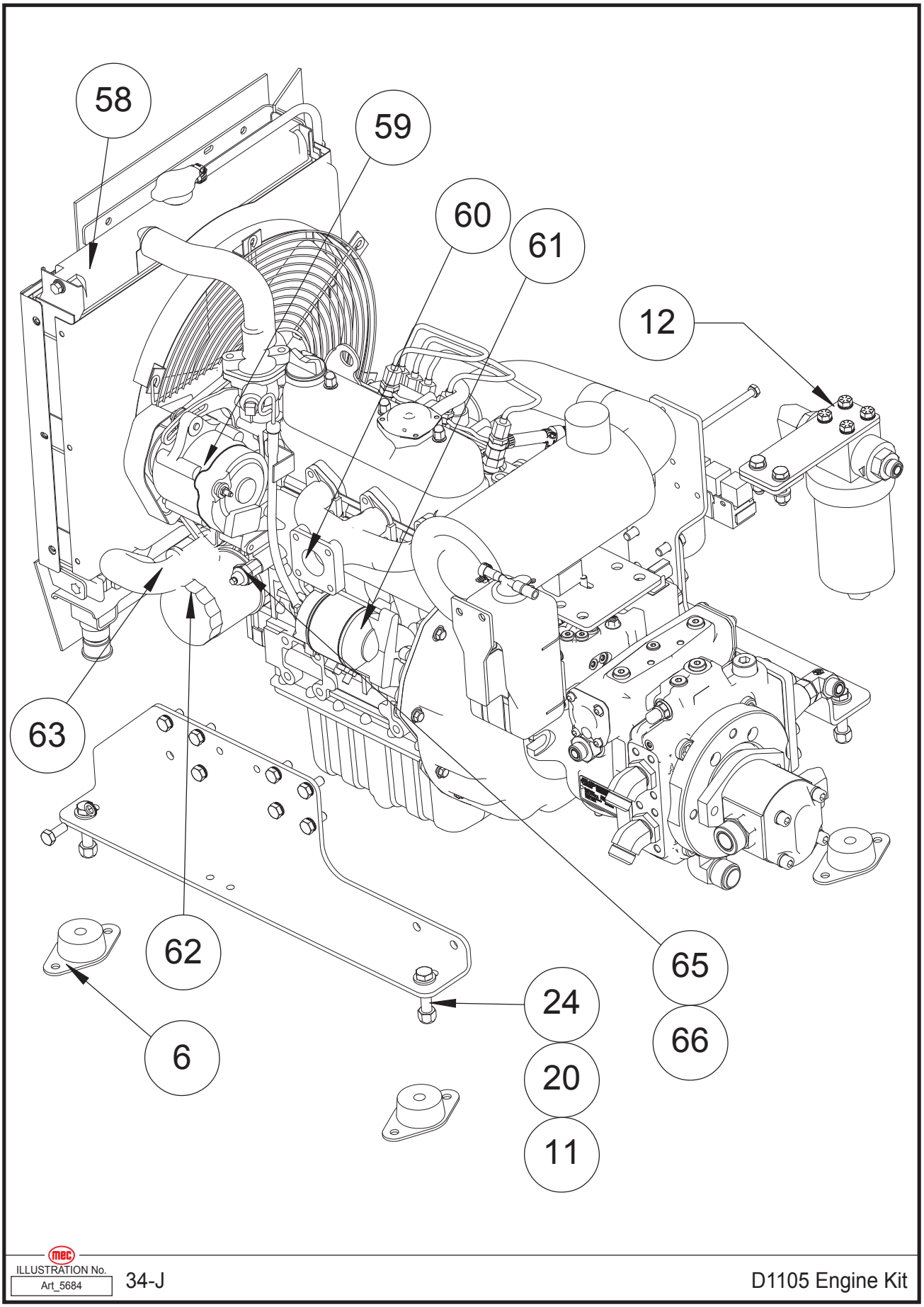

ILLUSTRATION No. Art_5684 34-J D1105 Engine Kit

Item	Part Number	Description	Qty.
6	17969	Motor Mount, Engine, 70 DR.	4
11	32071	Engine Mount, LH	1
12	32258	Assembly, Charge Filter (Refer to page 174)	1
20	50006	WSHR M10 ZP Nordlock	16
24	50116	HHCS M10-1.5X025 08 ZP	8
58	9831	Radiator	1
59	90227	Alternator	1
60	92486	Manifold, Exhaust	1
61	9826	Starter	1
62	8665	Oil Filter	1
63	94238	Lower Radiator Hose	1
65	51210	HYFT FP-MBSPT-02-02; 7040-02-02	1
66	91175	Pressure Switch, Oil	1

D1105 Engine Kit, PMP Pump and Fittings

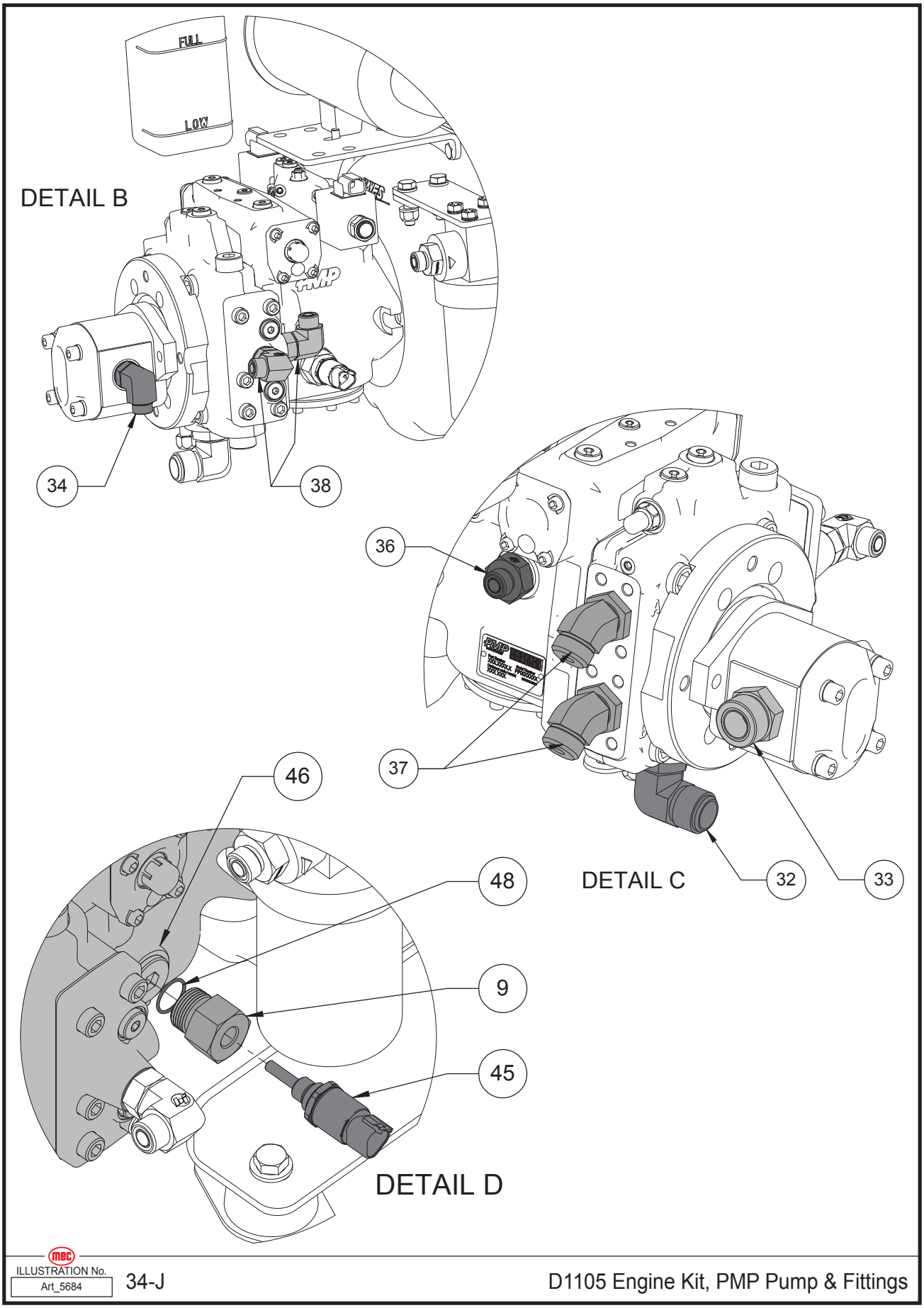

ILLUSTRATION No. Art_5684 34-J D1105 Engine Kit, PMP Pump & Fittings

Item	Part Number	Description	Qty.
9	31068	Adaptor, Temperature Sensor	1
32	50786	HYFT MB-MJ90-16-16 ; 6801-16-16-NWO	1
33	50806	HYFT MFFOR-MB-16-12	1
34	50848	HYFT MFFOR-MB90-8-10	1
36	51037	HYFT MB-MFFOR 12-8	1
37	51063	HYFT MFFOR-MB45-12-12	2
38	51314	HYFT MB-MFFOR90 10-08	2
45	95111	Sensor, Electronic Temperature	1
46	95235	35CC Closed Loop Pump	1
48	95460	O-Ring	1

Exhaust Assembly

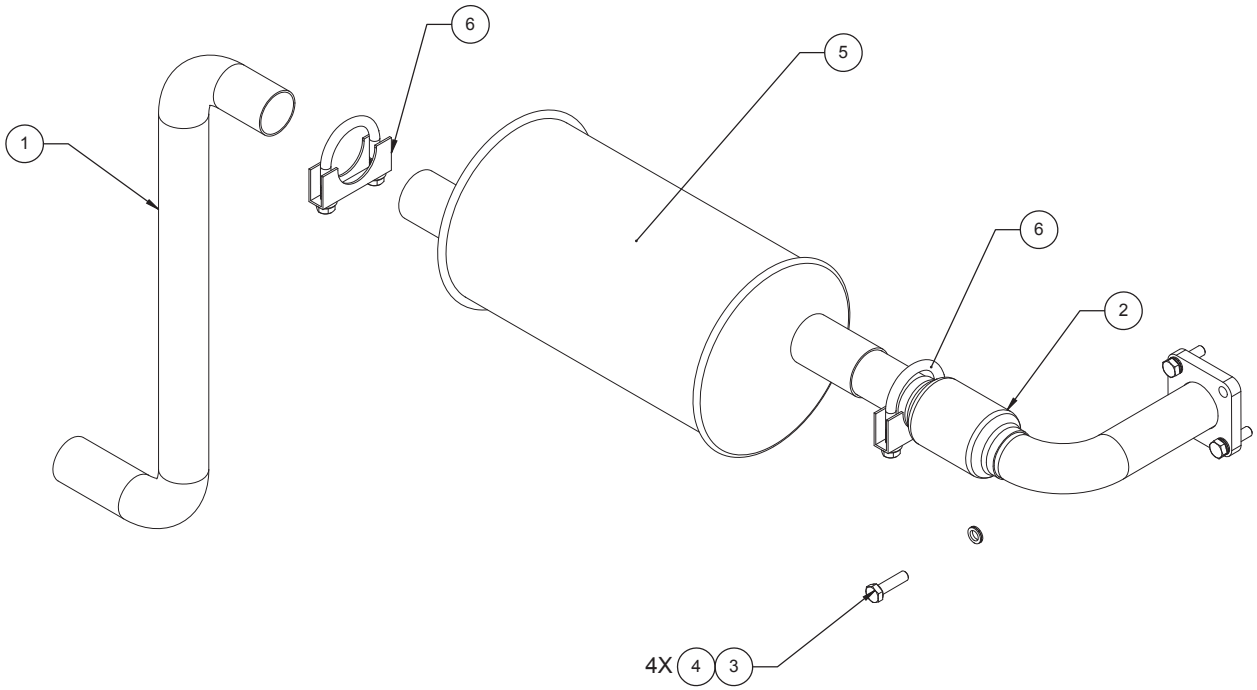

ILLUSTRATION No. Art_5678 34-J Exhaust Assembly

Item	Part Number	Description	Qty.
--	32088	Exhaust Assembly	--
1	32090	Tube, Exhaust, End	1
2	32251	Exhaust, Weldment	1
3	50032	HHCS M8-1.25 x 30 ZP	4
4	50200	M08 Nordlock Washer	4
5	92965	Exhaust Muffler, 6” Round, 1.5" ID Inlet, 1.5" ID Outlet	1
6	93267	1-5/8" Muffler Clamp, 5/16” Thread, Zinc Plate	2

Turret Assembly, Part 1

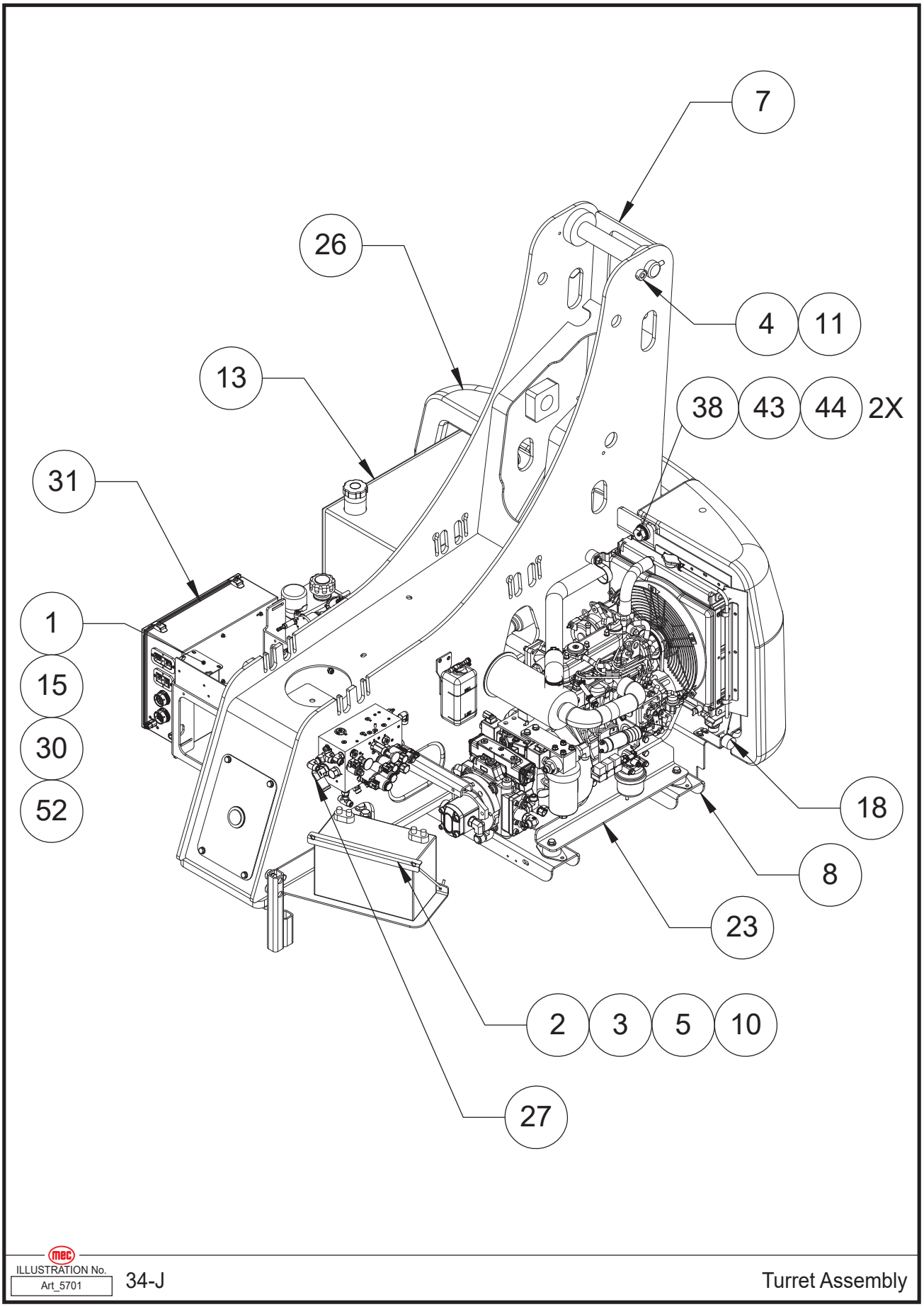

ILLUSTRATION No. Art_5701 34-J Turret Assembly

Item	Part Number	Description	Qty.
1	9716	Horn 12v-48v	1
2	17475	Battery Holding	1
3	17966	Battery 950CCA Group 31- Threaded Stud	1
4	18152	1/2" Pin Retainer	1
5	22563	Battery Hold Down Bolt	2
7	32062	Turret Weldment	1
8	32075	Turret Cross-Member	2
10	32083	Battery Tray	1
11	32084	Pin, Ø50.80mm X 358mm LG	1
13	32087	Subassembly, Fuel Tank (Refer to page 188)	1
15	32093	Lower Control Box Bracket	2
18	32102	Hood Stop Assembly (Refer to page 218)	1
23	32200	Engine Kit, D1105 (Refer from page 224 to page 230)	1
26	32250	Counterweight	1
27	32257	Assembly, Main Manifold (Refer to page 160)	1
30	32284	Plate, Accessories	1
31	32305	Lower Control Box, 34J Assembly (For Control Box Without PPSS - Refer to page 122 and page 124) (For Control Box With PPSS - Refer to page 126 and page 128)	1
52	93939	Alarm, 87dB, 12-24 VDC, Backup	1

Turret Assembly, Part 2

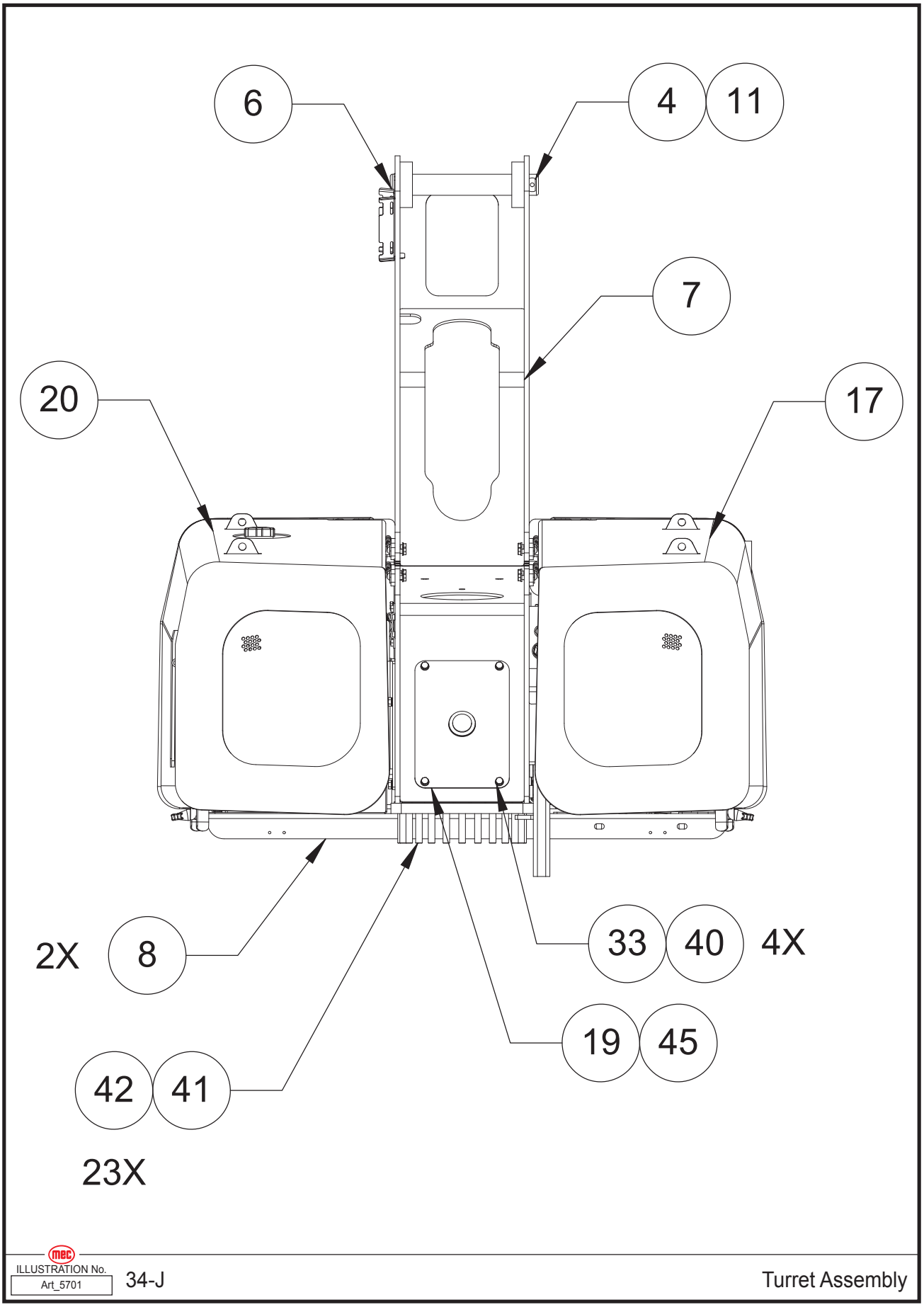

ILLUSTRATION No. Art_5701 34-J Turret Assembly

Item	Part Number	Description	Qty.
4	18152	1/2" Pin Retainer	1
6	28347	Bracket, Cable Guide, Forming	1
7	32062	Turret Weldment	1
8	32075	Turret Cross-Member	2
11	32084	Pin, Ø50.80mm X 358mm LG	1
17	32101	Assembly, Hood, Engine, Micro Boom (Refer to page 216)	1
19	32105	Plate, Cover, Front Turret	1
20	32106	Assembly, Hood, Control, Micro Boom (Refer to page 220)	1
33	50002	WSHR M10 ZP Standard Flat	10
38	50064	WASHR 1-0/0 ZP Flat XT	4
40	50215	HHCS M10-1.50X020 08 ZP F	10
41	50259	M16- 2.0X100 GD 10.9	23
42	50582	WSHR 05/08 X 1-5/16 X 1/8, SAE, 08, ZP	23
43	50585	HHCS M24-3.00 X 060, 10.9, ZP	4
44	50586	WSHR M24 ZP Nordlock	4
45	90749	Marinco Plug	1

Turret Assembly, Part 3

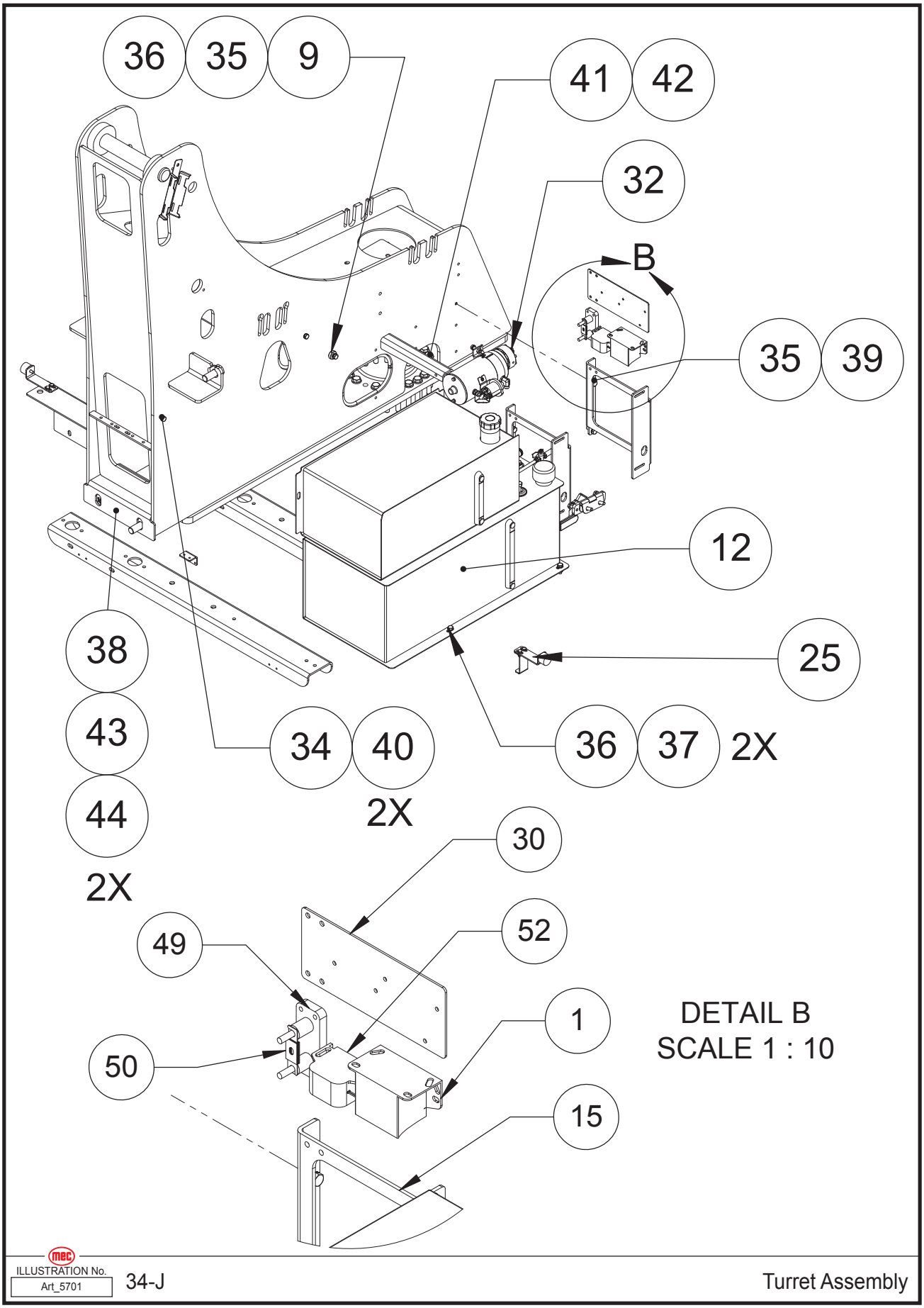

ILLUSTRATION No. Art_5701 34-J Turret Assembly

Item	Part Number	Description	Qty.
1	9716	Horn 12v-48v	1
9	32076	Spacer, Turret Stop	3
12	32086	Hydraulic Tank Assembly (Refer to page 172)	1
15	32093	Lower Control Box Bracket	2
25	32249	Hood Stop Assembly (Refer to page 222)	1
30	32284	Plate, Accessories	1
32	32313	Auxiliary Pump Assembly (Refer to page 170)	1
34	50006	WSHR M10 ZP Nordlock	2
35	50007	WSHR M12 ZP Nordlock	10
36	50034	HHCS M10-1.50X030 08 ZP F	3
37	50049	NNYL M10X1.50 08 ZP Nylon Inse	3
38	50064	WASHR 1-0/0 ZP Flat XT	4
39	50132	M12-1.5X030 08 ZP	8
40	50215	HHCS M10-1.50X020 08 ZP F	10
41	50259	M16- 2.0X100 GD 10.9	23
42	50582	WSHR 05/08 X 1-5/16 X 1/8, SAE, 08, ZP	23
43	50585	HHCS M24-3.00 X 060, 10.9, ZP	4
44	50586	WSHR M24 ZP Nordlock	4
49	93172	Fuse Holder	1
50	93173	400 Amp Ceramic Fuse	1
52	93939	Alarm, 87dB, 12-24 VDC, Backup	1

Turret Assembly, Part 4

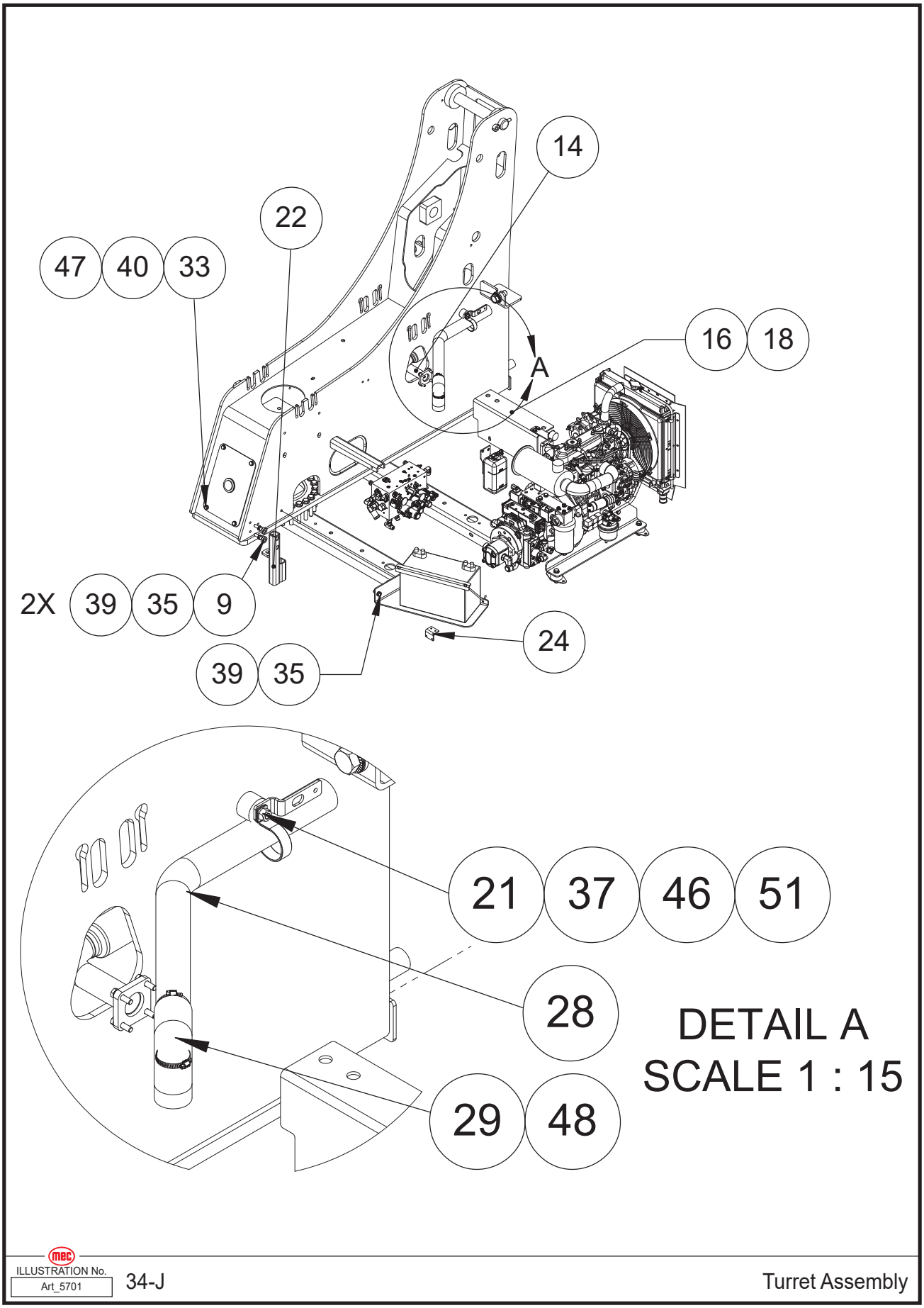

Item	Part Number	Description	Qty.
9	32076	Spacer, Turret Stop	3
14	32088	Exhaust, Sub-Assembly (Refer to page 232)	1
16	32095	Radiator Support, Bracket	1
18	32102	Hood Stop Assembly (Refer to page 218)	1
21	32114	Bracket, Upper Support, Radiator	1
22	32122	Turret Stop Assembly	1
23	32200	Engine Kit, D1105 (Refer from page 224 to page 230)	1
24	32246	Mount, Hood Latch	2
28	32279	Intake Air	1
29	32282	Air Intake	1
33	50002	WSHR M10 ZP Standard Flat	10
35	50007	WSHR M12 ZP Nordlock	10
37	50049	NNYL M10X1.50 08 ZP Nylon Inse	3
39	50132	M12-1.5X030 08 ZP	8
40	50215	HHCS M10-1.50X020 08 ZP F	10
46	91953	P-Clamp, 2" DIA. X 3/4" WIDE, .406, Vinyl Coated	1
47	92098	Nut Clip M10 X .375	4
48	92537	#32 Hose Clamp	2
51	93728	Vibration Damper	1

34-J Harness

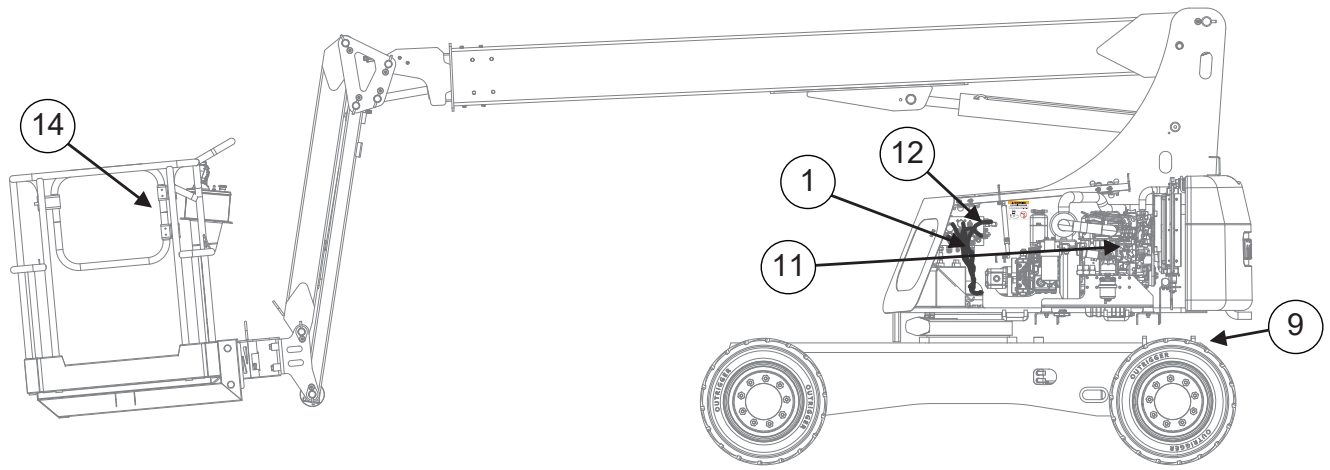

ART_5947

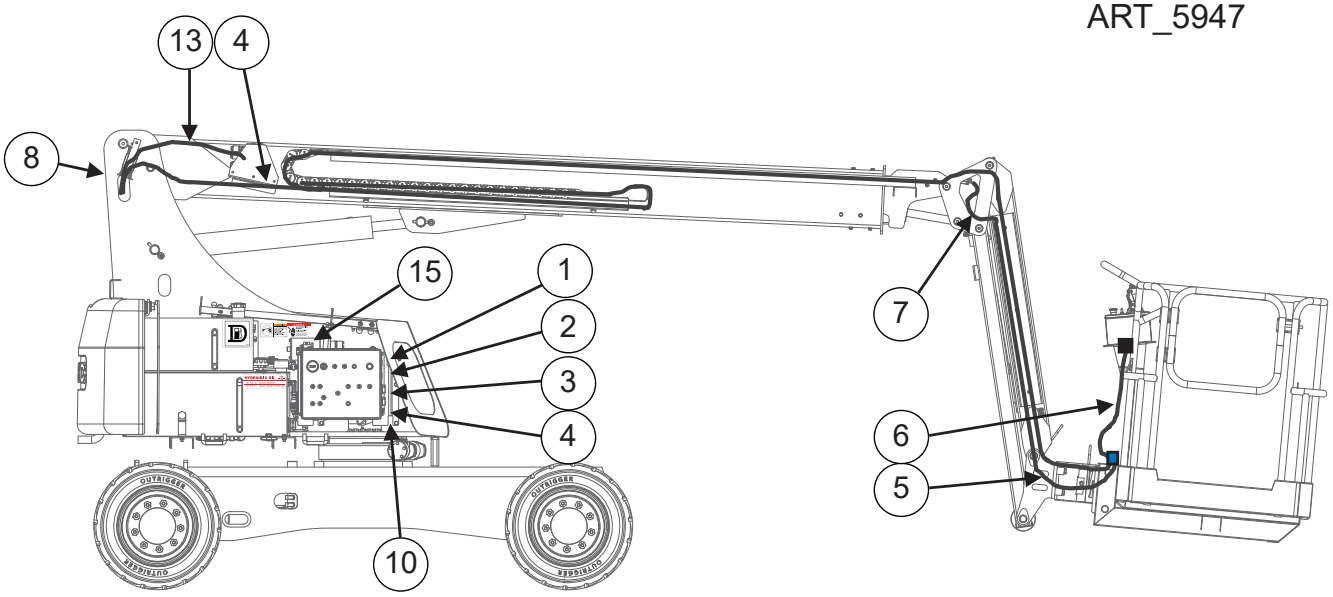

Item	Part Number	Description	Qty.
1	32396	Harness, Main	1
2	32252	Harness, Engine Extension	1
3	32262	Harness, Platform Valves Extension	1
4	32265	Harness, Communication To Platform	1
5	32272	Harness, Can-Tilt Extension	1
6	32264	Harness, Communication To Upper Controls	1
7	28883	Harness, Can-Tilt Jumper	1
8	32276	Harness, Extension Sensor	1
9	32254	Harness, Axle Lock Extension	1
10	28856	Harness, Power Supply To Lower Controls	1
11	92222	Harness, Engine, D1105	1
12	32253	Harness, Brake Valve Extension	1
13	32261	Harness, Platform Valves, Sensors	1
14	9441	Harness, A/C Power To Platform	50'
15	32275	Harness, Emergency Pump	1

THIS PAGE HAS BEEN INTENTIONALLY LEFT BLANK.

Option, Cold Weather

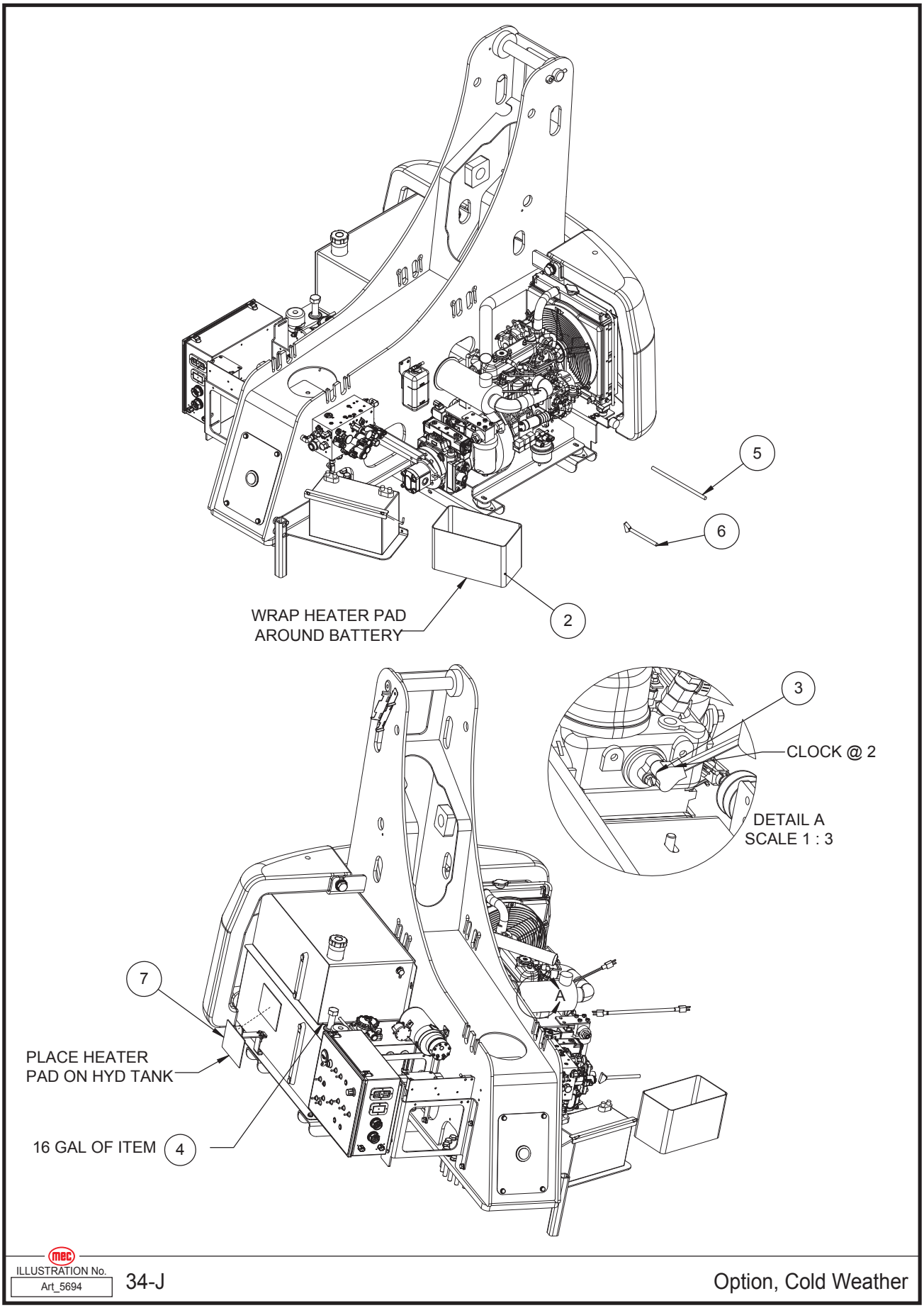

ILLUSTRATION No. Art_5694 34-J Option, Cold Weather

Item	Part Number	Description	Qty.
--	32294	Cold Weather Option	--
1	32850	Turret Subassembly (Refer from page 234 to page 240)	REF
2	19177	Battery Blanket-110V, 36"	1
3	93439	Heater, Cylinder Head	1
4	A0101	Rando Premium MV (Gallon)	1
5	92506	6' 15A-125VAC Extension Cord	1
6	92507	2' 14/3 15A-125VAC 3-WAY Split Cord	1
7	93275	120 VAC Hydraulic Tank Heater	1

REF - Reference

Option, 3.5kW Generator

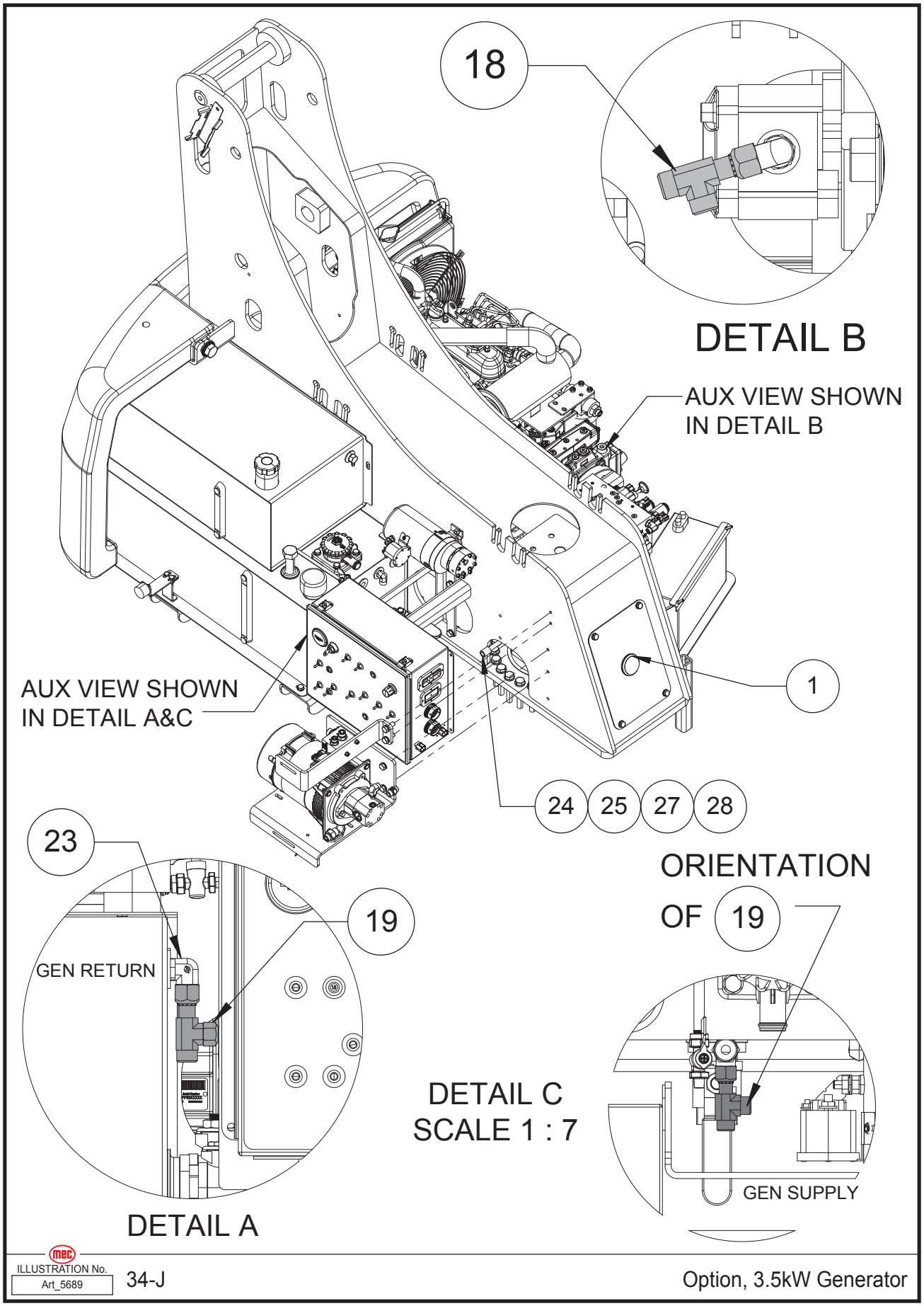

Item	Part Number	Description	Qty.
--	32240	Option, 3.5kW Generator	--
1	7115	Pry Out Plug	1
18	50811	HYFT MFFOR-FFORX-MFFOR-8 ; FS6602-08-08-08	1
19	50824	HYFT MFFOR-FFORX-MFFOR-6 ; FS6602-06-06-06	1
23	51309	HYFT MP-MFFOR 6-8	1
24	92277	10/3 So Cord, Power To Platform, Foot	50
25	92477	Butt Connector 10-12 AWG Non Insulated	3
27	A0029	Heat Shrink Tube Black 3/4"	6
28	A0036	1/4 Heat Shrink (Black)	6

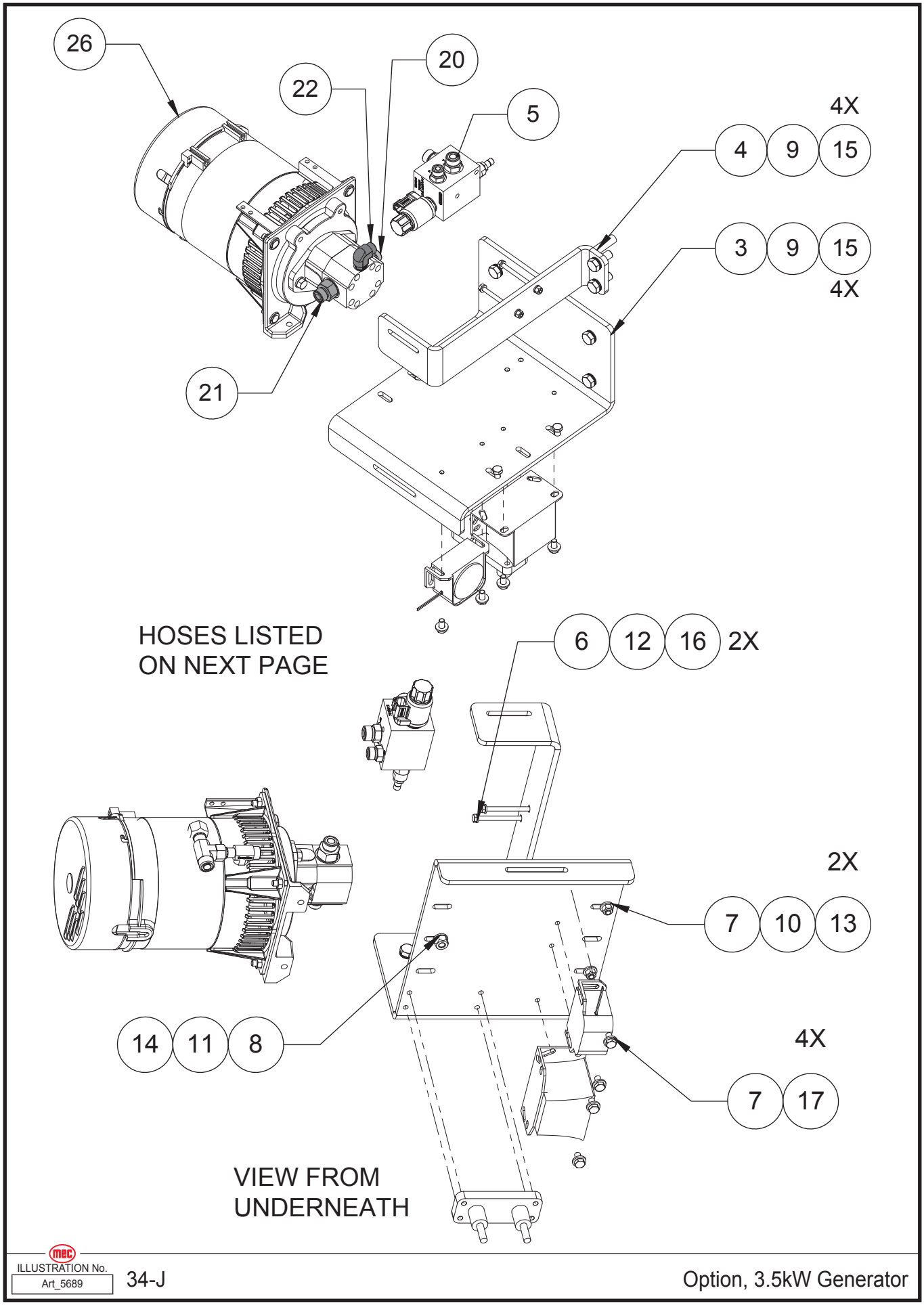

ILLUSTRATION No. Art_5689 34-J Option, 3.5kW Generator

Item	Part Number	Description	Qty.
--	32240	Option, 3.5kW Generator	--
3	32237	Bracket, 3.5 KW GEN	1
4	32238	Bracket, Manifold 3.5KW	1
5	32297	3.5KW Generator Manifold Assembly (Refer to page 250)	1
9	50007	WSHR M12 ZP Nordlock	6
15	50132	M12-1.5X030 08 ZP	6
20	50836	HYFT MFFOR-MB-6-8 ; FS6400-06-08-O	1
21	50837	HYFT MFFOR-MB-8-10	1
22	51083	HYFT MFFOR-MB90-06-04	1
26	94620	Generator 3.5KW 60HZ 120V	1

Item	Part Number	Description	Qty.
--	32240	Option, 3.5kW Generator	--
6	50000	WSHR M06 ZP Standard Flat	4
7	50001	WSHR M08 ZP Standard Flat	6
8	50002	WSHR M10 ZP Standard Flat	1
10	50032	HHCS M8-1.25 x 30 ZP	2
11	50033	HHCS M10-1.50X025 08 ZP F	1
12	50047	NNYL M06X1.00 08 ZP Nylock	2
13	50048	NNYL M08X1.25 08 ZP Nylon	2
14	50049	NNYL M10X1.50 08 ZP Nylon Inse	1
16	50291	HHCS M06-1.00X80 08 ZP P	2
17	50295	HHCS M08-1.25X15 08 ZP P	4

P/N	I.D.	END A Fitting P/N		END B Fitting P/N		Hose Spec P/N	Hose Spec Description	Hose Length (in)
56164	MP - GEN Pump Inlet	50687	06G-06FFORX90S	50686	06G-06FFORX90L C@7	50629	6M-3K	9.5"
56165	MT - GEN Pump Outlet	50697	08G-08FFORX90L	50697	08G-08FFORX90L C@4	50630	8M-3K	12"
56166	GEN-CD - Tank	50685	06G-06FFORX45	50687	06G-06FFORX90S C@3	50629	6M-3K	28.75"
56167	Main P - P	50687	06G-06FFORX90S	50690	06G-08FFORX	50630	6M-3K	55"
56168	T - Tank	50622	08G-08FFORX90S	50622	08G-08FFORX90S	50630	8M-3K	18.75"

From	Wire Color	Connector	To	Wire Color	To	End B
GEN. Cable	Black	92477	92277	Black	92271 - GFCI	Hot
GEN. Cable	Green	92477	92277	Green	92271 - GFCI	Ground
GEN. Cable	White	92477	92277	White	92271 - GFCI	Neutral

Option, 3.5kW Generator Manifold Assembly

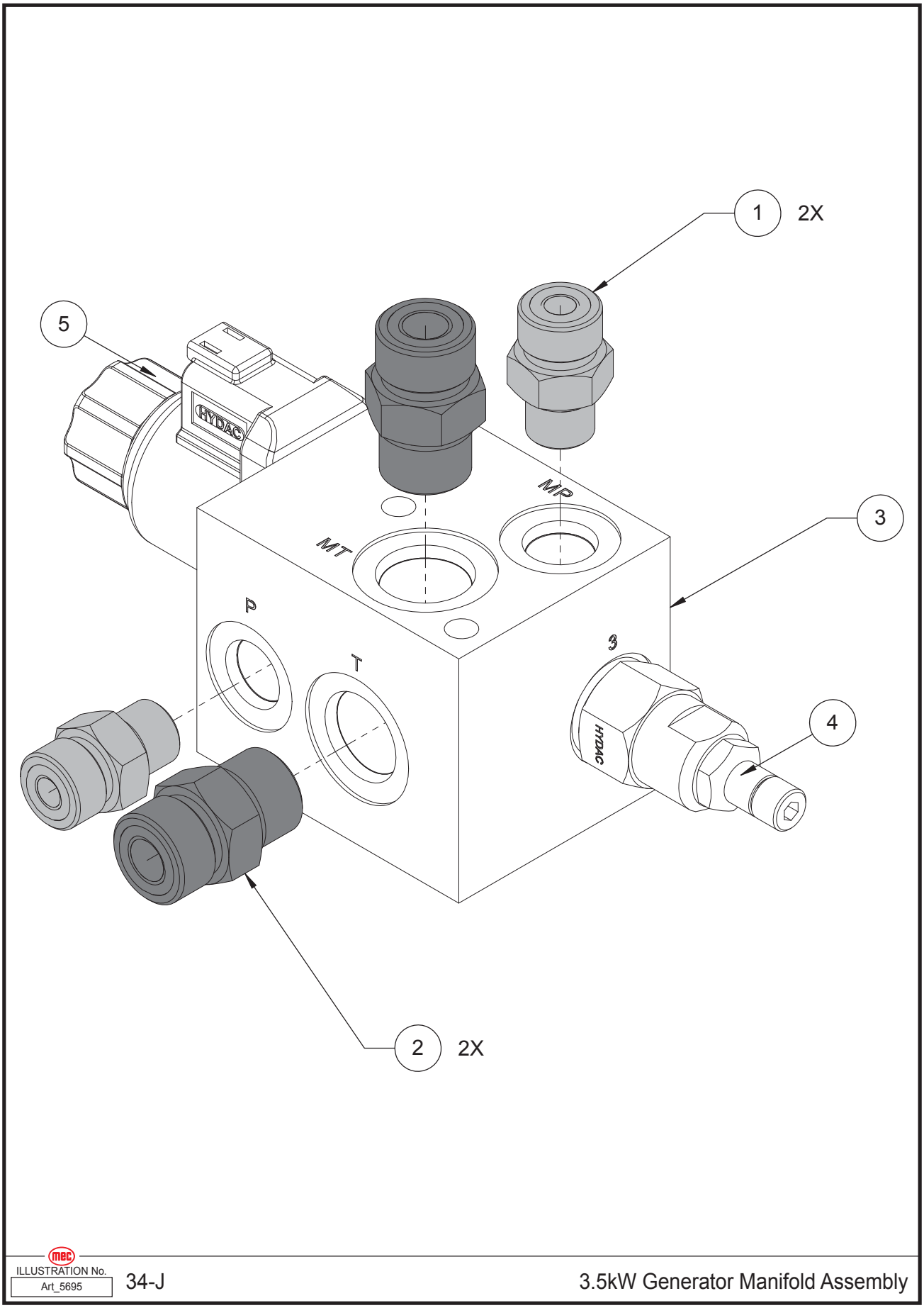

ILLUSTRATION No. Art_5695 34-J 3.5kW Generator Manifold Assembly

Item	Part Number	Description	Qty.
--	32297	3.5KW Generator Manifold Assembly	--
1	50835	HYFT MFFOR-MB-6-6	2
2	50841	HYFT MFFOR-MB-8-8 ; FS6400-08-08-O	2
3	95238	Generator Manifold, 3.5KW	1
4	95712	Valve	1
5	95711	Valve	1
--	94083	Coil	1

Option, Upper Control Box Cover

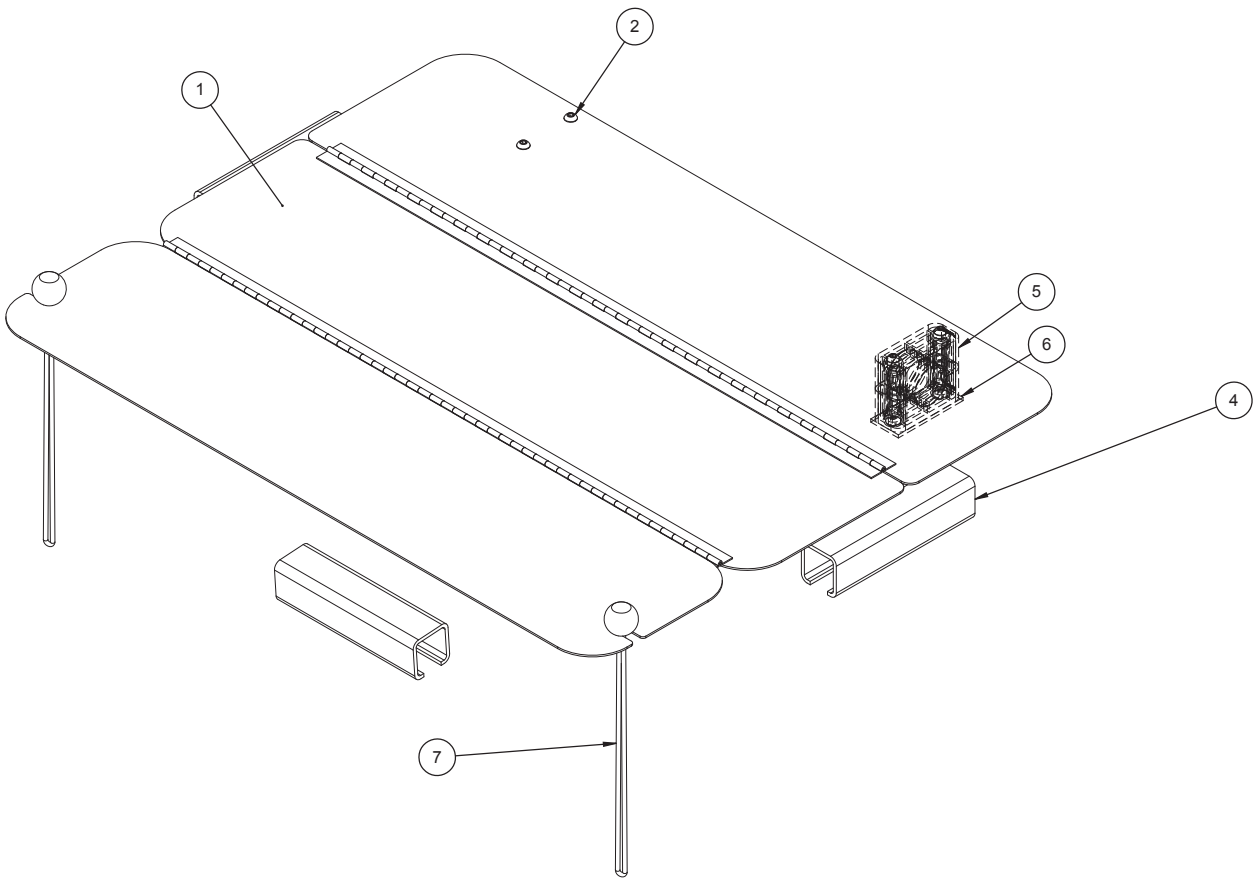

ILLUSTRATION No. Art_5698 34-J Option, Upper Control Box Cover

Item	Part Number	Description	Qty.
--	32356	Option, Upper Control Box Cover	--
1	32352	Weldment, Upper Control Box Cover	1
2	53090	BHCS M06-1.00X070, 12.9, SS, F	4
3	53092	NNYL M03-0.50 SS	4
4	92852	UHMW 1.25" X 5.5" C-Channel Wear Strip	3
5	94268	Clamp, Round Tube, 35 mm, Polyamide, Black	2
6	94486	Single Weld Plate	2
7	94487	10IN Tarp Canopy Bungee Cord (Plastic Toggle Ball Ends)	2

Option, 7.5kW Generator Assembly

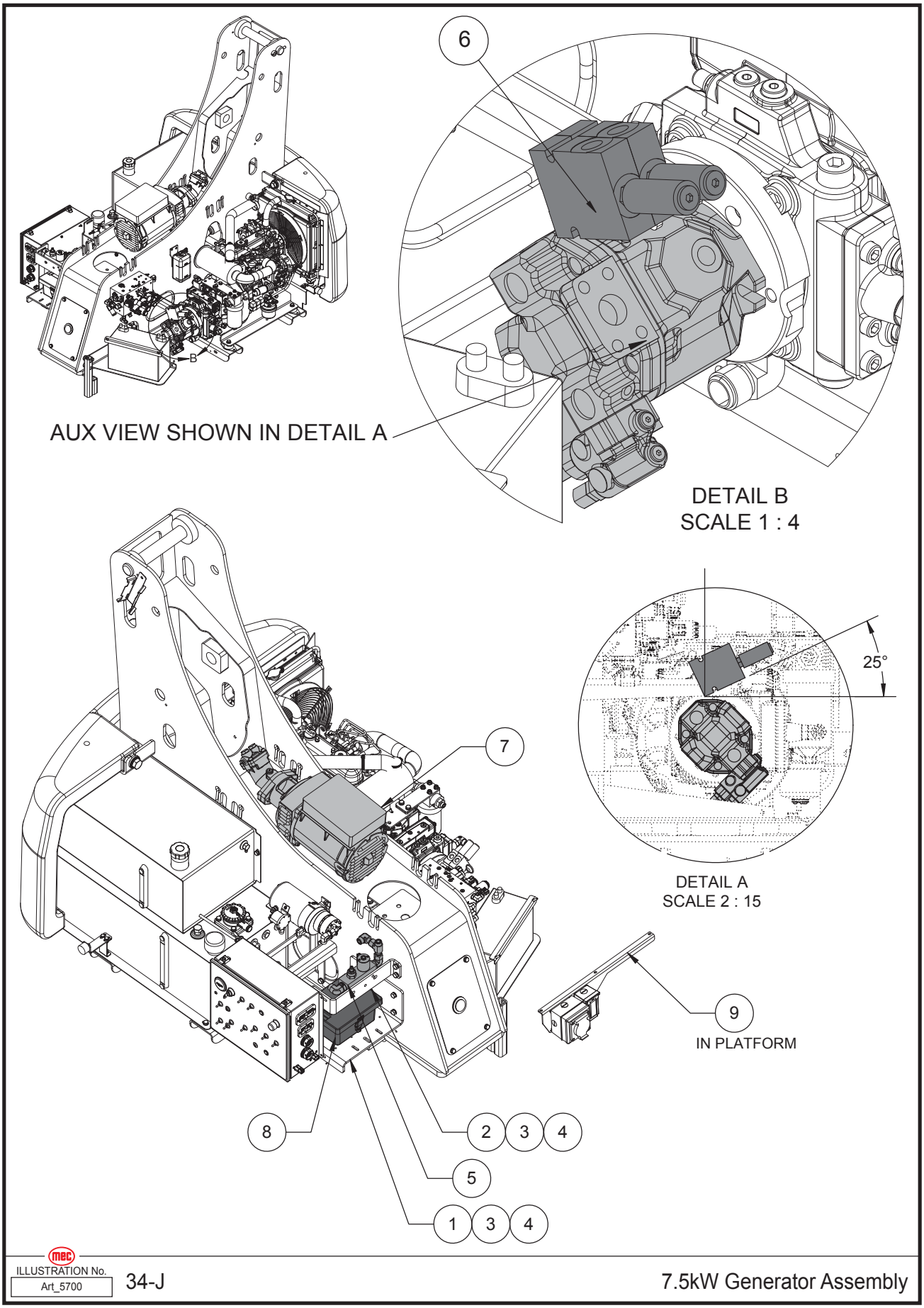

Item	Part Number	Description	Qty.
--	32374	Option , 7.5 kW Generator Assembly	--
1	32237	Bracket, 3.5 kW Gen	1
2	32238	Bracket, Manifold 3.5KW	1
3	50007	WSHR M12 ZP Nordlock	6
4	50132	M12-1.5X030 08 ZP	6
5	28993	7.5kW Generator Manifold Assembly (Refer to page 260)	1
6	94612	Pump HYD Rexroth 18CC	1
7	93829	Hydraulic Generator, 7.5KW	1
8	31220	Subassembly, Option, 7.5KW Breaker Box (Refer to page 256)	1
9	28573	Subassembly, Option, 7.5KW Outlet Boxes MKII (Refer to page 258)	1

Option - 7.5kW Breaker Box

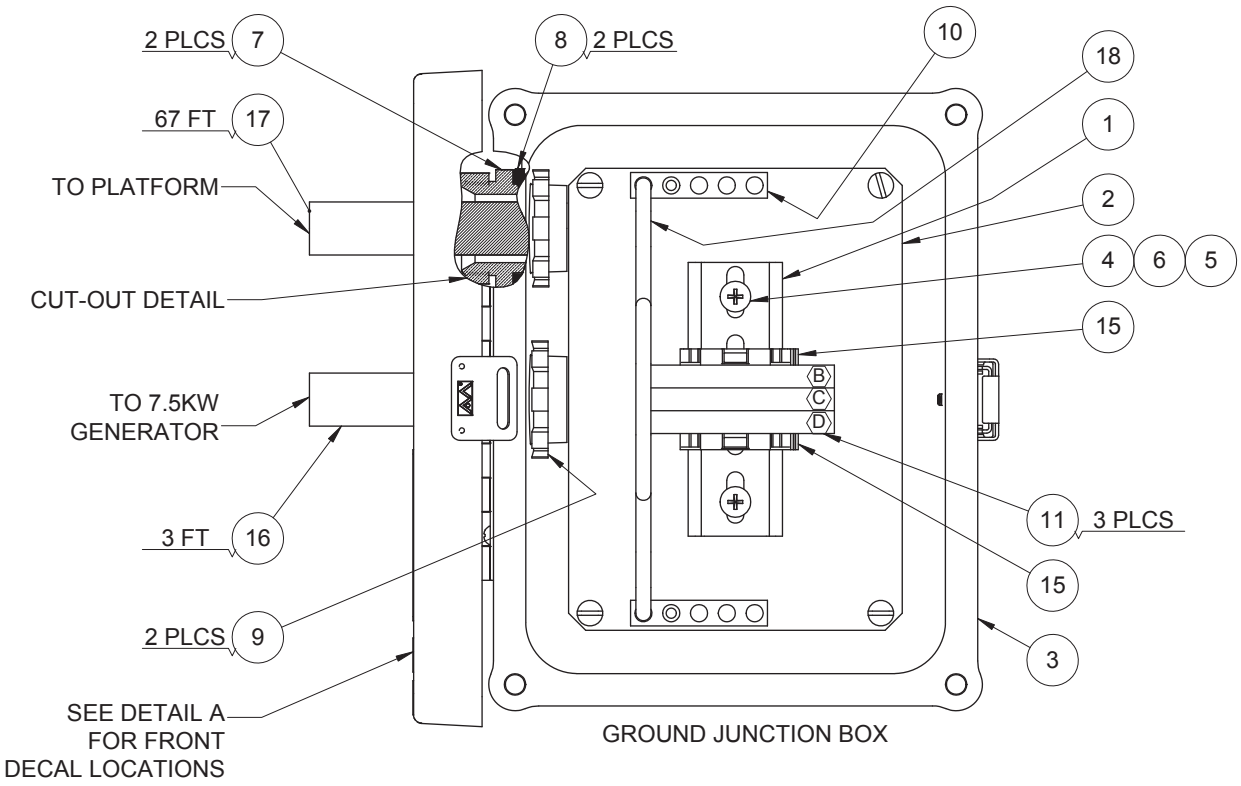

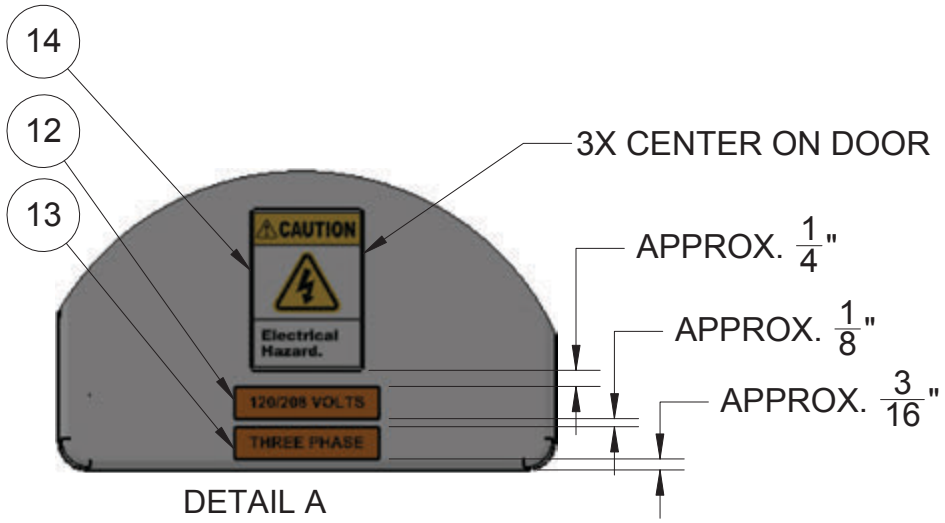

DETAIL A
FRONT OF DOOR BOX
STICKER LOCATIONS

ILLUSTRATION No. Art_5572 45-J 7.5kW Breaker Box

Item	Part Number	Description	Qty.
--	31220	Subassembly, Option, 7.5KW Breaker Box	--
1	28849	Option, 7.5kW Generator DIN Rail	1
2	28894	Option, 7.5kW Back Panel Hole Cutout	1
3	31144	Option, 7.5kW Breaker Box Cutout	1
4	50191	THMS #10-32 × 0.50 ZP	2
5	50238	NNYL #10-32 05 Z	2
6	50337	WSHR #10-32	2
7	93095	Cable Gland, 1”, Zinc Plated	2
8	93096	Gasket, Cable Gland, 1"	2
9	93097	Locknut, Cable Gland, 1"	2
10	94272	Ground Bar Kit	2
11	94397	ABB Miniature Circuit Breakers	1
12	94404	Electrical Equipment Marker, "120/208 VOLTS", 1/2" × 2-1/4"	1
13	94405	Electrical Equipment Marker, "THREE PHASE", 1/2" × 2-1/4"	1
14	94406	Illustrated Accident Prevention Label, "ELECTRICAL HAZARD", 1-3/4" × 2-1/2"	1
15	94407	End Stop, DIN-Rail	2
16	99289	10 AWG 5 Conductor	3 FT
17	99289	10 AWG 5 Conductor	67 FT
18	99289	10 AWG, Ground Wire, Terminal Block	SCRAP

Wiring Table		
Item 16 Wire Color	**Connection**	**Item 17 Wire Color**
GRN	A	GRN
BLK	B	BLK
RED	C	RED
YLW	D	YLW
WHT	E	WHT

Option - Subassembly, 7.5kW Outlet Boxes MkII

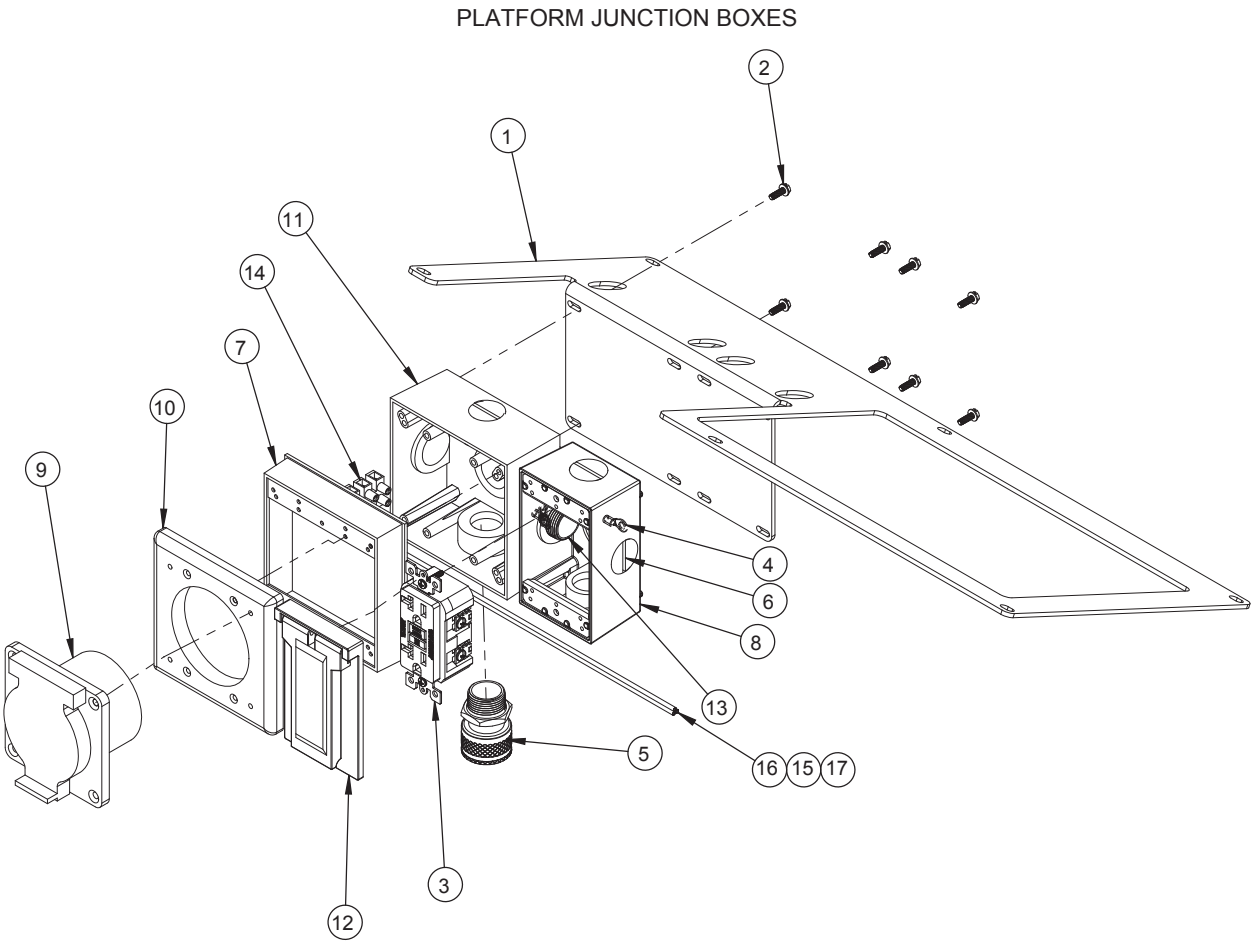

ILLUSTRATION No. Art_5733 45-J Subassembly, 7.5kW Outlet Boxes MkII

Item	Part Number	Description	Qty.
--	28573	Subassembly, Option, 7.5KW Outlet Boxes MKII	--
1	28574	Outlet Box Forming	1
2	53180	HHMS #08-32 X 0.50" ZP Type F Thread Cutting	8
3	92271	Outlet, 120V 20A GFCI	1
4	92661	Terminal, Ring #10 Stud, 12-10 AWG	3
5	94354	Cord/Cable Connector, Strain Relief, Liquidtight, 3/4”, Steel	1
6	94414	3/4" Closure Plug	3
7	94419	Weatherproof Box Extensions, 2-GANG, 1" Deep, Die Cast	1
8	94741	Electrical Box, 1-GANG, Weatherproof, 5X 3/4 NPT Outlets, Alum Red Dot	1
9	94743	Receptacle Safety-shroud	1
10	94744	"Adapter Plate Watertight" FOR 94743	1
11	94747	Box 2 Gang Weatherproof 5 Outlet 3/4" Bell 5342-0	1
12	94748	Cover Weatherproof 1 GANG Vertical GFCI Red Dot CCGV	1
13	94752	Conduit Rigid/IMC 3/4" X 1-1/2"	1
14	94765	Terminal Block 3-POS	1
15	99331	Wire, 12 AWG THHN Green Stranded, 12 Inches	1
16	99332	Wire, 12 AWG THHN White Stranded, 12 Inches	1
17	99333	Wire, 12 AWG THHN Black Stranded, 12 Inches	1

Option - 7.5kW Generator Manifold Assembly

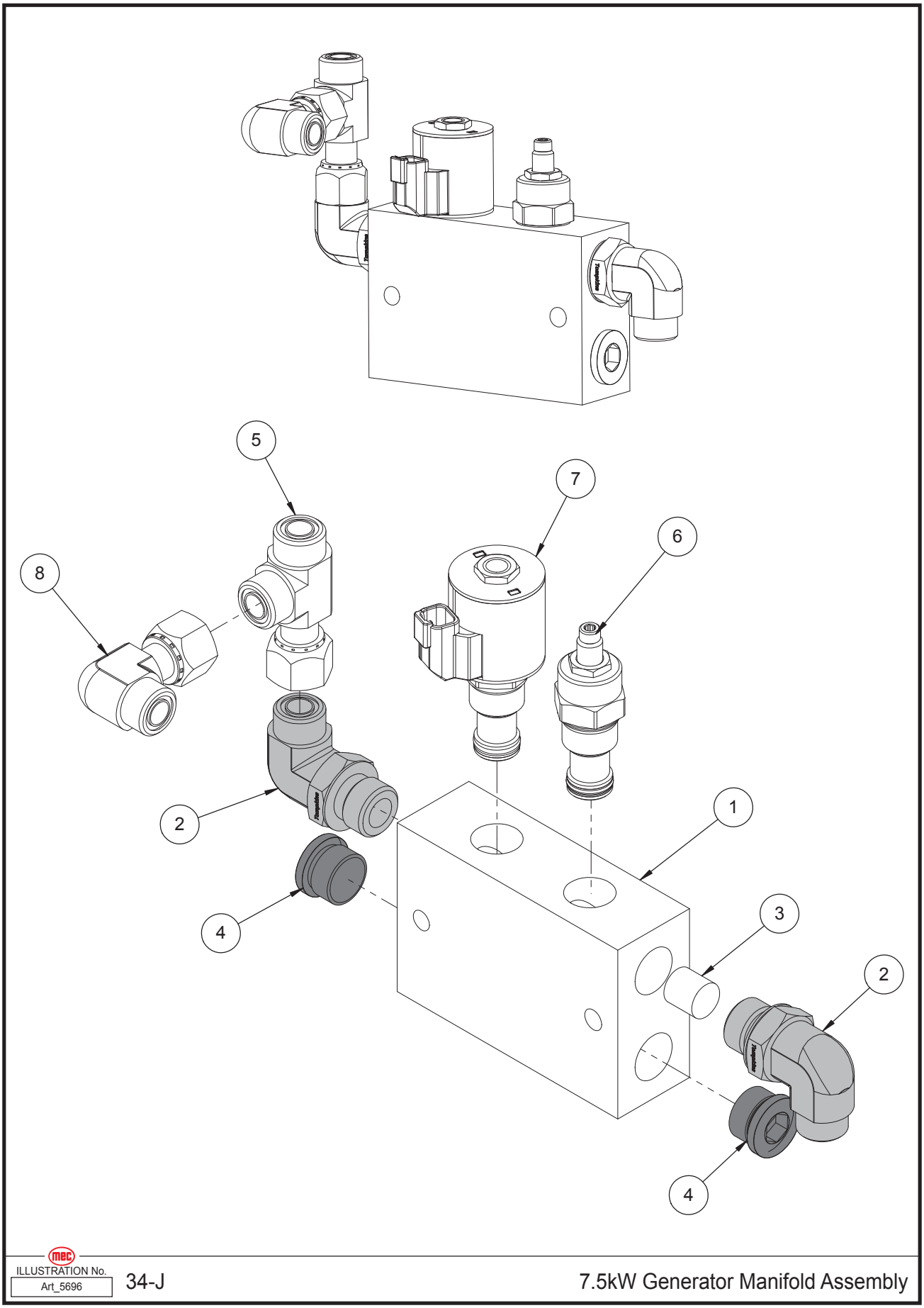

ILLUSTRATION No. Art_5696 34-J 7.5kW Generator Manifold Assembly

Item	Part Number	Description	Qty.
--	28993	7.5kW Generator Manifold Assembly	--
1	94108	2 By 2 Parallel Body #12	1
2	51066	HYFT MFFOR-MB90-10-12	2
3	94109	Plug For 94108	1
4	51217	HYFT MB-12 PLUG	2
5	51199	HYFT MFFOR-FFORX-MFFOR-10 FF6602-10-10-10	1
6	94410	Needle Valve	1
7	94126	2 Way Proportional Valve NC W/12 E-Coil	1
8	51198	HYFT MFFOR-FFORX90-10-10 FF6500-10-10	1

Option - Proactive Platform Safety System

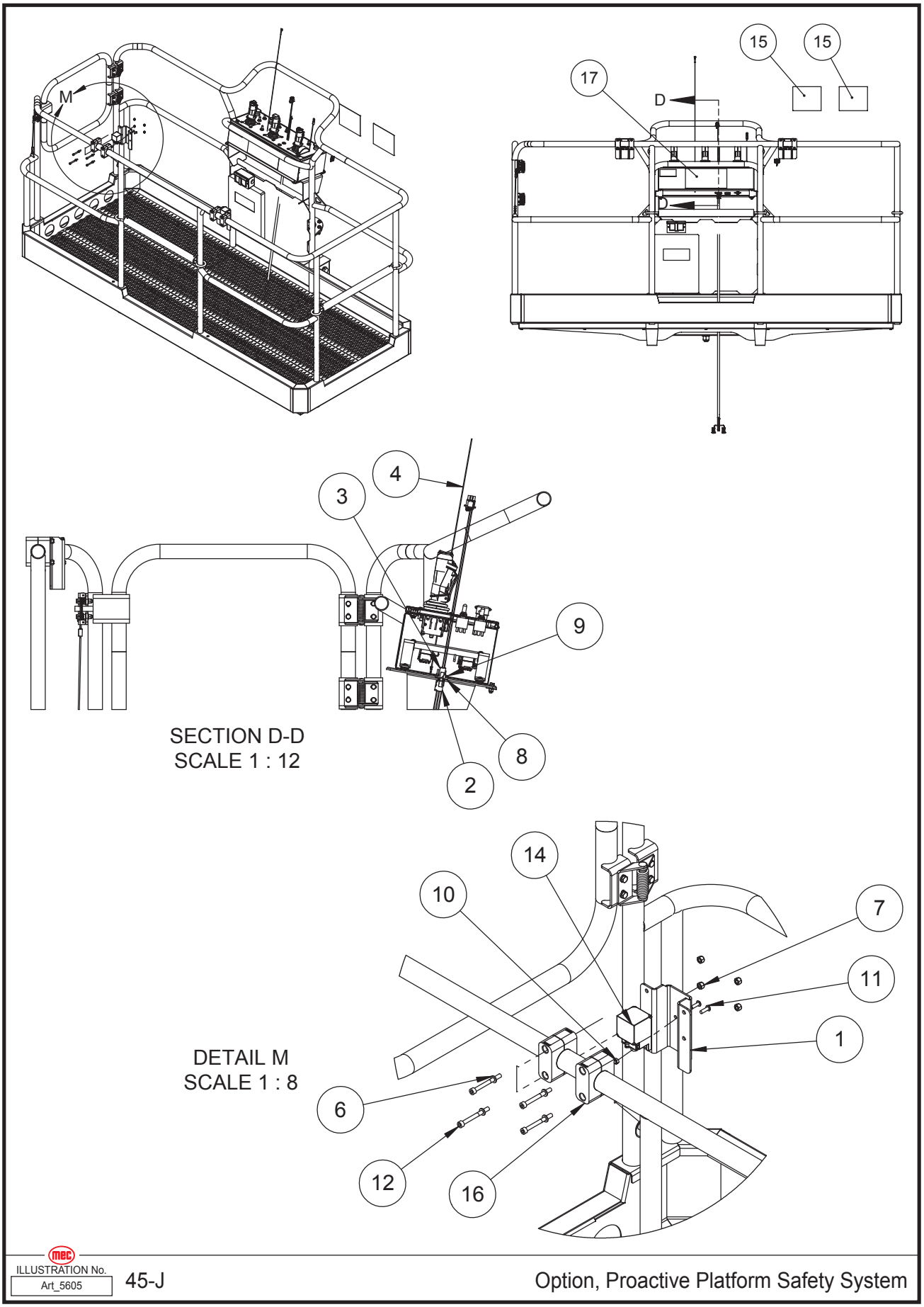

ILLUSTRATION No. Art_5605 45-J Option, Proactive Platform Safety System

Item	Part Number	Description	Qty.
1	28537	Bracket, Prox Switch Mount	2
2	28865	Harness, PPSS Extension	1
3	28866	Harness, PPSS Control	1
4	28890	Harness, PPSS Override	1
5	42386	Harness, PPSS Sensor Cable 90 Deg	2
6	50000	WSHR M06 ZP Standard Flat	8
7	50047	NNYL M06X1.00 08 ZP Nylock	8
8	50141	THMS #06-32 X 3/4 ZP	2
9	50329	NNYL #06-32 ZP Nylon Inse	2
10	50524	NNYL M05-0.80 Nylon Lock Nut	4
11	53035	BHCS M05-0.80 X 16, G08, ZP	4
12	53083	SHCS M06-1.00X060, 12.9, ZP, P	8
13	92950	Plug, Liquid Tight - Gen Switch Hole	2
14	94143	Sensor, Ultrasonic, UC4000	2
15	94254	Decal PPSS Equipped	2
16	94268	Clamp, Round Tube, 35 mm, Polyamide, Black	4
17	95287	Decal, PPSS Switch Instructions	1

Decals

Control Side, Module Door Closed

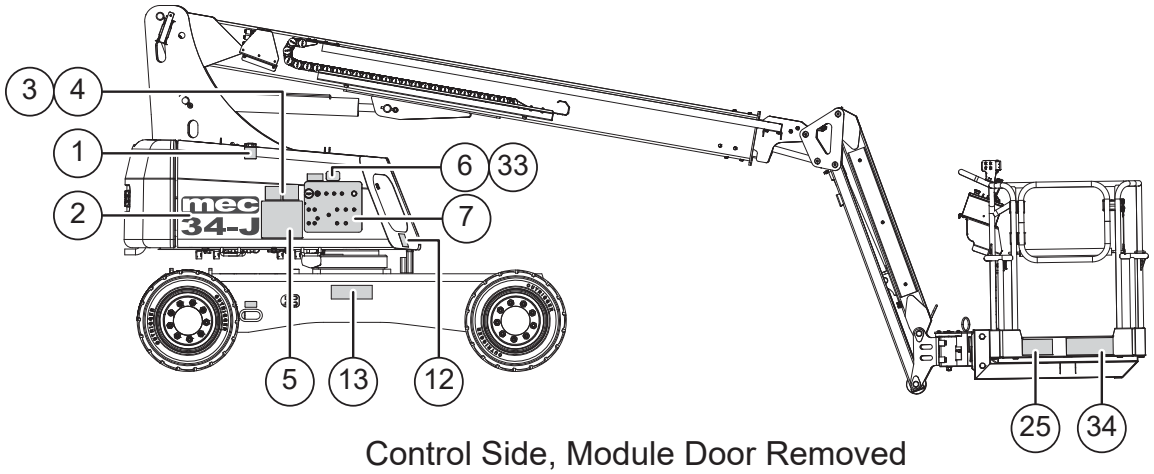

Control Side, Module Door Removed

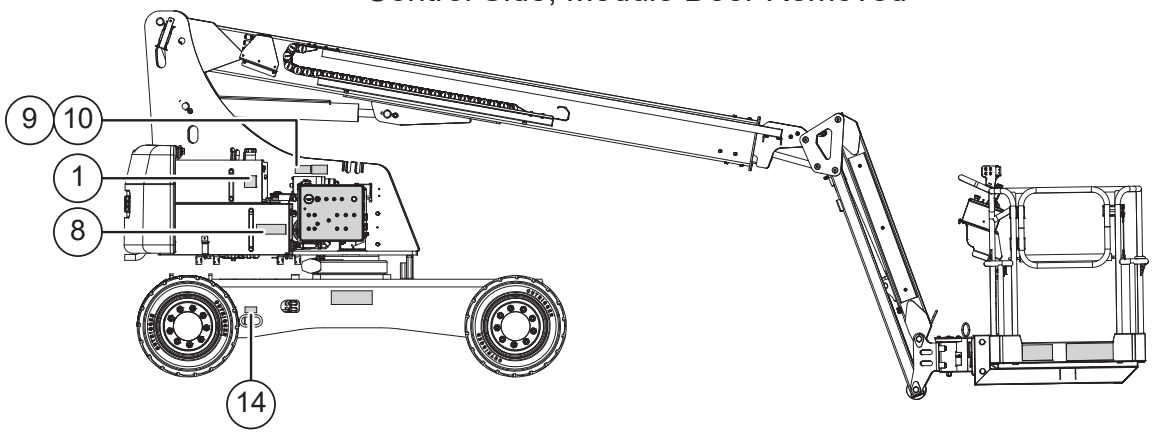

Engine Side, Module Door Closed

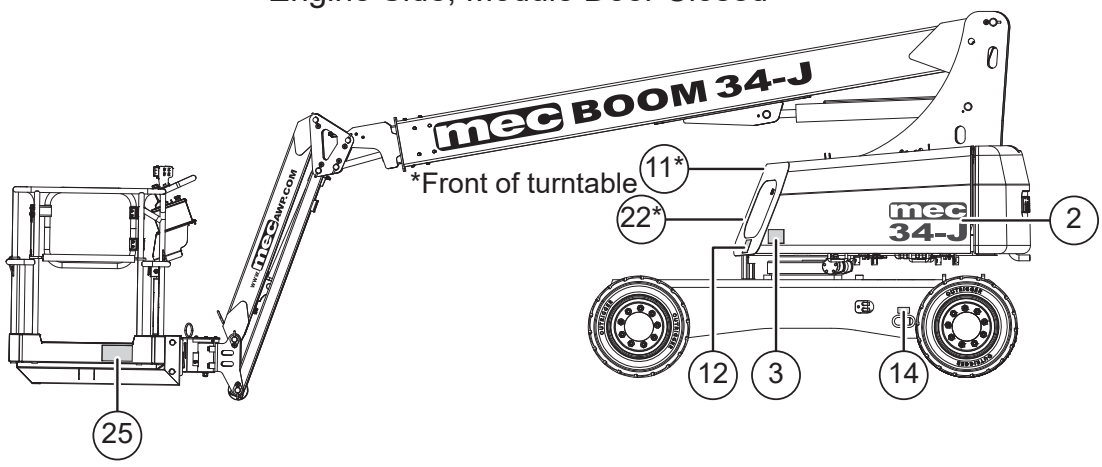

Engine Side, Module Door Removed

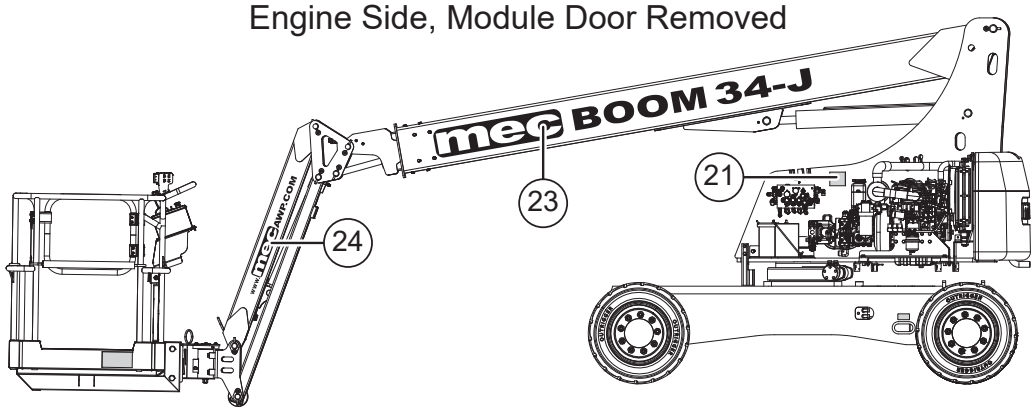

Front Side

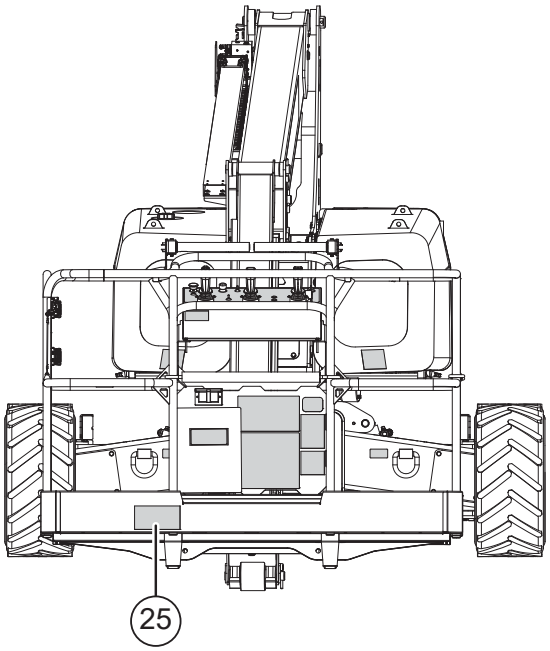

Rear Side

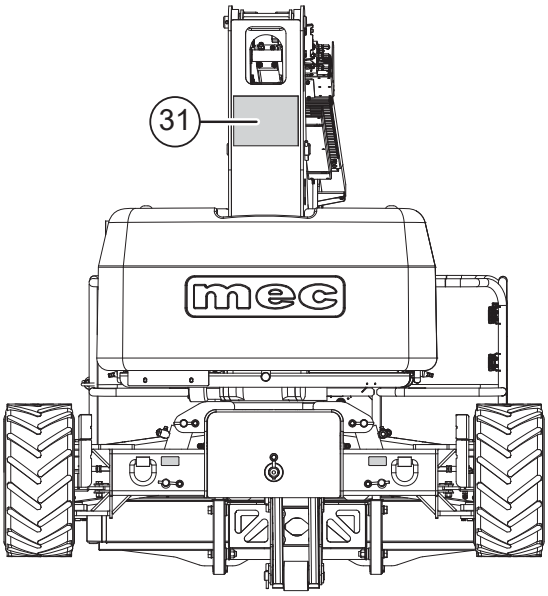

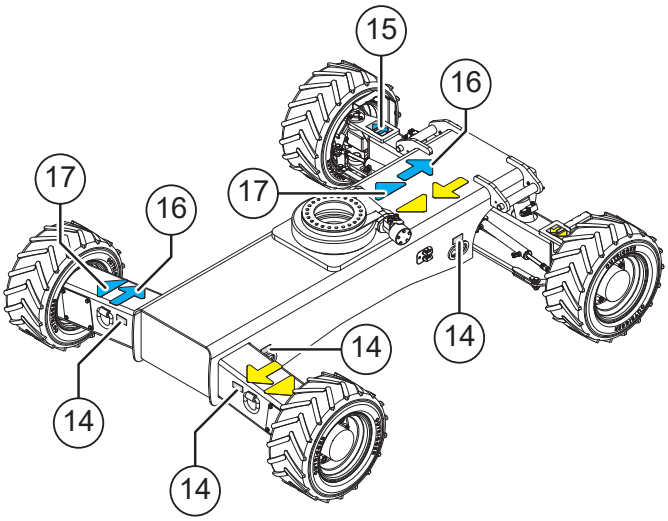

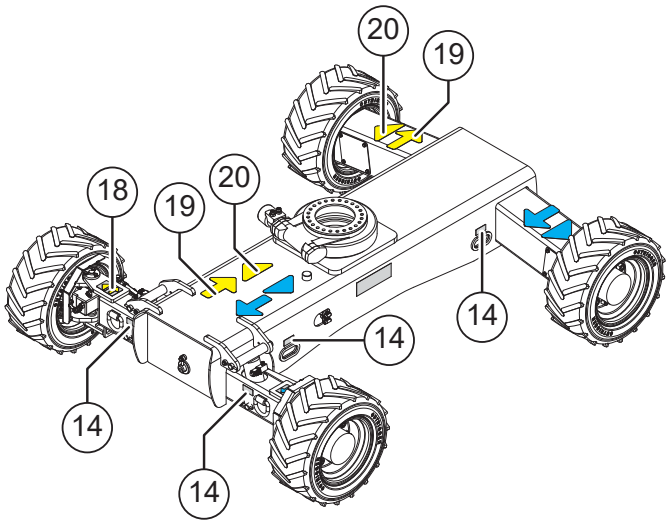

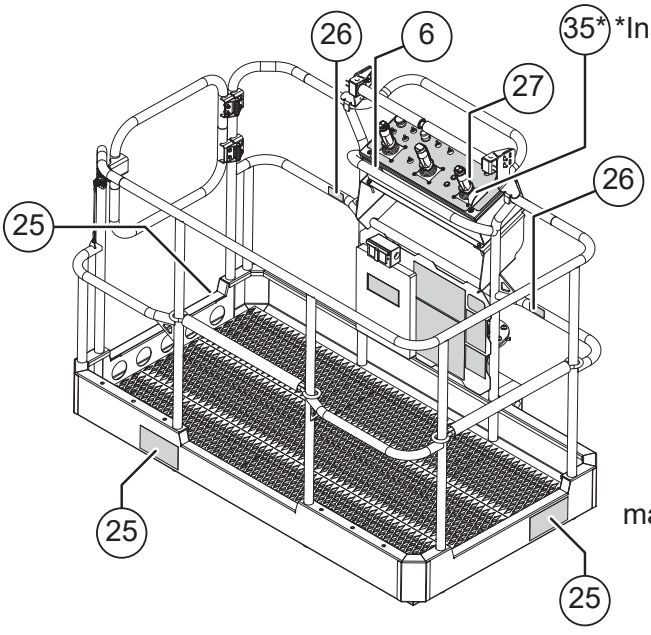

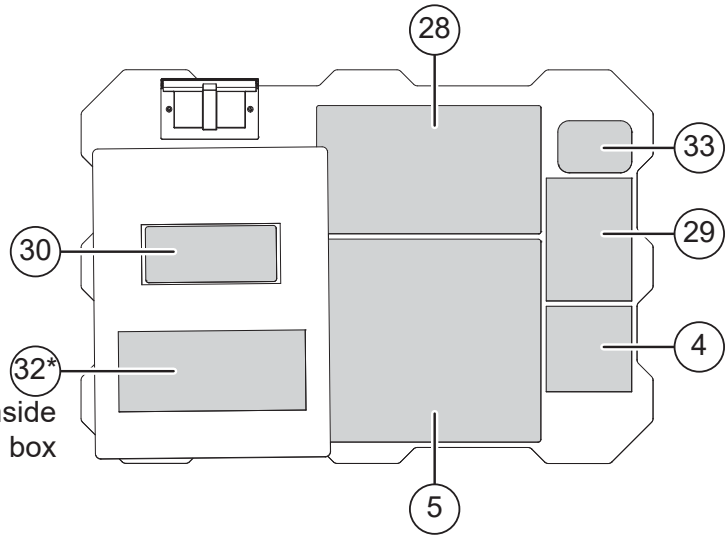

1  91975 Qty. - 2	2  95183 Qty. - 2	3  93801 Qty. - 2	4  93807 Qty. - 2
5  93755 Qty. - 2	6 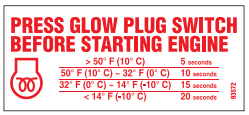 93572 Qty. - 2	7 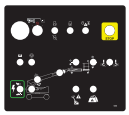 93930 Qty. - 1	8  92117 Qty. - 1
9  90732 Qty. - 1	10  93805 Qty. - 1	11  91850 Qty. - 1	12  93804 Qty. - 2
13 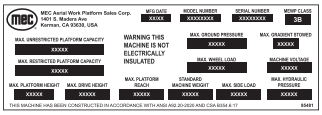 95481 Qty. - 1	14  91973 Qty. - 8	15  93814 Qty. - 1	16  91971 Qty. - 2
17  91981 Qty. - 2	18  93815 Qty. - 1	19  91972 Qty. - 2	20  91982 Qty. - 2
21  93806 Qty. - 1	22  90751 Qty. - 1	23  95184 Qty. - 1	24  92416 Qty. - 1
25 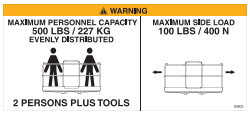 93803 Qty. - 3	26  91970 Qty. - 2	27 Std. - Reverse Joystick Serial 154XXXXX  96516 Qty. - 1	Orig. - Non-Reverse Joystick Serial 141XXXXX  95283 Qty. - 1
28  93754 Qty. - 1	29  93802 Qty. - 1	30 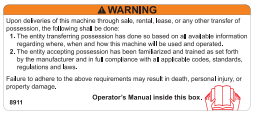 8911 Qty. - 1	31  90719 Qty. - 1
32  90718 Qty. - 1	33  95264 Qty. - 2	34 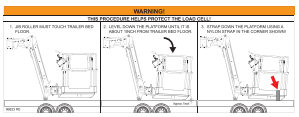 96823 Qty. - 1	35  92236 Qty. - 1

Notes

Notes

Notes

MEC Parts Order Form

Phone: 559-842-1523
Fax: 559-400-6723
Email: Parts@mecawp.com

Please Fill Out Completely:

Date: _____ **Ordered By:** _____
Account: _____ **Your Fax No.:** _____
Bill to: _____ **Ship to:** _____
_____ _____
_____ _____

Purchase Order Number _____ **Ship VIA** _____
*** All orders MUST have a Purchase Order Number*
*****Fed Ex shipments require Fed Ex account number*

Part Number	Description	Quantity	Price

All back-ordered parts will be shipped when available via the same ship method as original order unless noted below:

_____ Ship complete order only - No Backorders
_____ Ship all available parts and contact customer on disposition of back-ordered parts
_____ Other (Please specify)

Signature _____

Limited Owner Warranty

MEC Aerial Platform Sales Corp. warrants its equipment to the original purchaser against defects in material and/or workmanship under normal use and service for one (1) year from date of registered sale or date the unit left the factory if not registered. MEC Aerial Platform Sales Corp. further warrants the structural weldments of the main frame and scissor arms to be free from defects in material or workmanship for five (5) years from date of registered sale or date unit left the factory if not registered. Excluded from such warranty is the battery(s) which carries a ninety (90) day warranty from described purchase date. Warranty claims within such warranty period shall be limited to repair or replacement, MEC Aerial Platform Sales Corp's option, of the defective part in question and labor to perform the necessary repair or replacement based on MEC Aerial Platform Sales Corp's then current flat rate, provided the defective part in question is shipped prepaid to MEC Aerial Platform Sales Corp. and is found upon inspection by MEC Aerial Platform Sales Corp. to be defective in material and/or workmanship. MEC Aerial Platform Sales Corp. shall not be liable for any consequential, incidental or contingent damages whatsoever. Use of other than factory authorized parts; misuse, improper maintenance, or modification of the equipment voids this warranty. The foregoing warranty is exclusive and in lieu of all other warranties, express or implied. All such other warranties, including implied warranties of merchantability and of fitness for a particular purpose, are hereby excluded. No Dealer, Sales Representative, or other person purporting to act on behalf of MEC Aerial Platform Sales Corp. is authorized to alter the terms of this warranty, or in any manner assume on behalf of MEC Aerial Platform Sales Corp. any liability or obligation which exceeds MEC Aerial Platform Sales Corp's obligations under this warranty.



MEC Aerial Work Platforms

1401 S. Madera Avenue, Kerman, CA 93630 USA
Toll Free: 1-877-632-5438
Phone: 1-559-842-1500
Fax: 1-559-842-1520
info@MECawp.com
www.MECawp.com